VIN PLATE DECODING INFORMATION

1	2	3	4	5	6	7	8	9	10	11	12 thru 17
Country	**Make**	**Vehicle Type**	**Other**	**Line**	**Series**	**Body Style**	**Engine**	**Check Digit**	**Model Year**	**Assy. Plant**	**Sequence No.**

The following table interprets the VIN Plate position shown above.

Position	Interpretation	Codes = Description
1	Country of Origin	1 = Manufactured By DaimlerChrysler Corporation
2	Assembler	J = Jeep
3	Vehicle Type	7 = Truck Less Sales Code "CGS" Side Air Bags
4	GVWR & Pass. Safety	D = 1-3000 GVWR & Hyd. Brakes E = 3001-4000 GVWR & Hyd. Brakes F = 4001-5000 GVWR & Hyd. Brakes G = 5001-6000 GVWR & Hyd. Brakes
5	Vehicle Line	T = Compass / Patriot Left Hand Drive (FWD) F = Compass / Patriot Left Hand Drive (4x4) 7 = Compass / Patriot Right Hand Drive (4x4)
6	Series	2 = Patroit -74 4 = Patroit Limited -74 4 = Compass-49 5 = Compass Limited-49
7	Body Style	8 = Sport Utility 4 Door
8	Engine	K = 2.4L I4 CYL DOHC 16 Valve Dual VVT Gasoline (ED3)
9	Check Digit	0 = Check Digit
10	Model Year	6 = 2006
11	Assembly Plant	D = Belvidere
12 thru 17	Vehicle Build Sequence	Model Year Assembly Sequence

Group - 1

Component Parts for Mopar Accessories

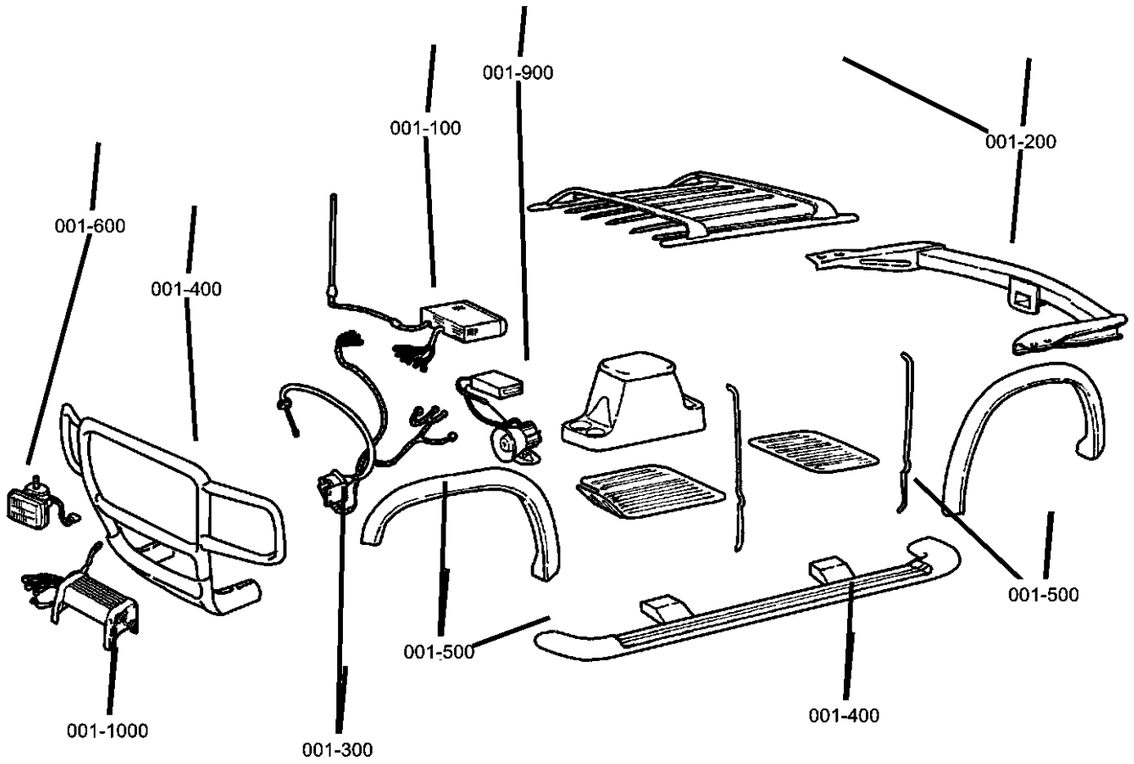

001-100 Audio & Electronics 	**001-1100** Powertrain 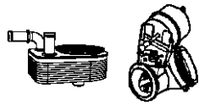	**001-200** Carriers & Cargo Hauling 	**001-300** Driving Convenience
001-400 Exterior Appearance 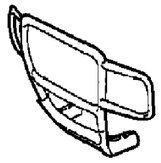	**001-600** Fog Lights & Electrical 	**001-900** Security 	

Group - 1 Component Parts for Mopar Accessories

Illustration Title — Group-Fig. No.

Audio & Electronics
Satellite Receiver GEN 2.5 ..... Fig. 1 - 105
Install Kit - Satellite Radio ..... Fig. 1 - 107
Video Entertainment System-Compass ..... Fig. 1 - 110
Video Entertainment System-Patriot ..... Fig. 1 - 115
Navigation Kit [REC] ..... Fig. 1 - 120
Navigation Kit - Stand Alone ..... Fig. 1 - 125
Module Kit-IPod Adapter ..... Fig. 1 - 130
FMiPod Adapter ..... Fig. 1 - 135

Carriers & Cargo Hauling
Bike Carrier - Roof - Upright Mount ..... Fig. 1 - 205
Bike Carrier -Hitch Mount ..... Fig. 1 - 210
Bike Carrier-Roof-Fork Mount ..... Fig. 1 - 215
Luggage Carrier-Roof-Vinyl ..... Fig. 1 - 220
Ski Carrier-Roof Mount ..... Fig. 1 - 225
Ski Carrier-Ski or Snowboard ..... Fig. 1 - 230
Carrier Kit - Canoe ..... Fig. 1 - 235
Carrier Kit-Water Sports ..... Fig. 1 - 240

Driving Convenience
Speed Control Kit-Patriot ..... Fig. 1 - 305
Speed Control Kit-Compass ..... Fig. 1 - 307
Remote Start ..... Fig. 1 - 310
Sensor Package Park/Distance ..... Fig. 1 - 315
Hands-Free Kit/Cellular Phone-Blue Tooth ..... Fig. 1 - 320
Hands-free Kit/Cellular Phone-Blue Tooth-Low Speed ..... Fig. 1 - 325

Exterior Appearance
Wheel Kit ..... Fig. 1 - 405
Wheel Kit ..... Fig. 1 - 410

Fog Lights & Electrical
Off-Road/Driving Lamp Wiring Kit ..... Fig. 1 - 605
Roof Mounted Off-Road Lamp Wiring Kit ..... Fig. 1 - 610
Fog Lamp Kit ..... Fig. 1 - 615
Engine Block Heater ..... Fig. 1 - 620

Security
Alarm Kit ..... Fig. 1 - 910

Powertrain
Engine Oil Cooler ..... Fig. 1 - 1105
Engine Oil Cooler ..... Fig. 1 - 1110

Satellite Receiver GEN 2.5
Figure 1-105

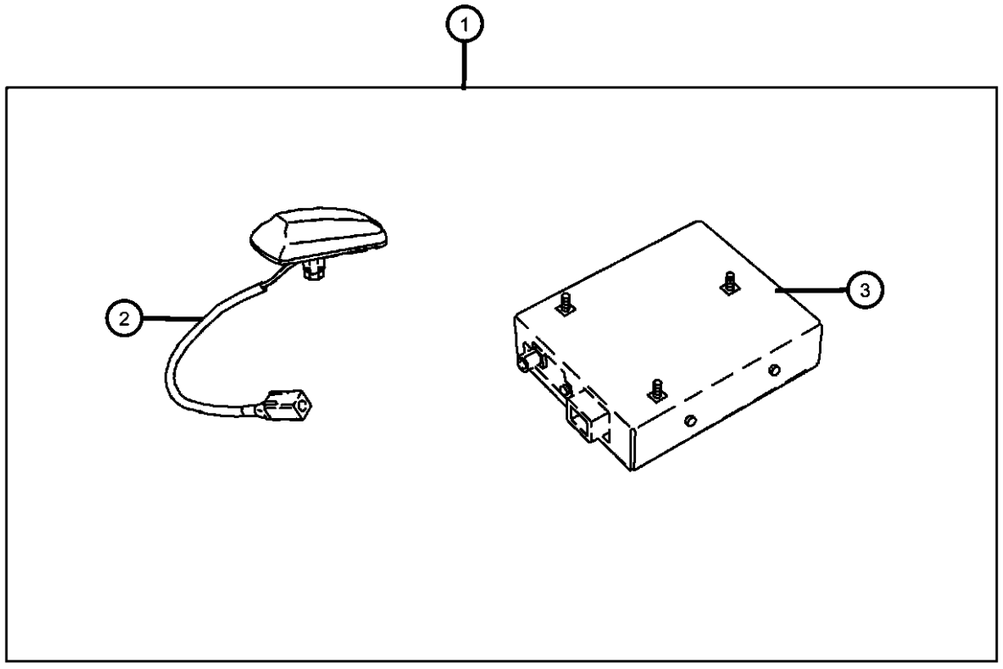

ITEM	PART NUMBER	QTY	LINE	SERIES	BODY	ENGINE	TRANS	TRIM	DESCRIPTION
Note: For Warranty Repair On Item 3, Order Using Z Prefix									
1	82209719AC	1							RECEIVER, Satelite
2	05150048AB	1							ANTENNA, Satellite
3	68015147AD	1							RECEIVER, Satellite

COMPASS/PATRIOT (MK)

SERIES	LINE	BODY	ENGINE	TRANSMISSION
H = HIGHLINE L = LOWLINE P = PREMIUM	J = JEEP - 4WD T = JEEP - 2WD	49 = HATCHBACK TYPE #2 74 = SPORT UTILITY 4-DR TYPE #4	ED3 = 2.4L 4 Cyl DOHC 16V Dual VVT Engine	DD7 = 5-Speed Manual T355 Transmission DEF = 6-Speed Manual Aisin BG6 Trans DAV = Continuously Variable Transmission DAW = Cont.Var. w/Off-Rd Crawl Ratio Trans

AR = use ase required - = Non illustrrated part

Install Kit - Satellite Radio
Figure 1-107

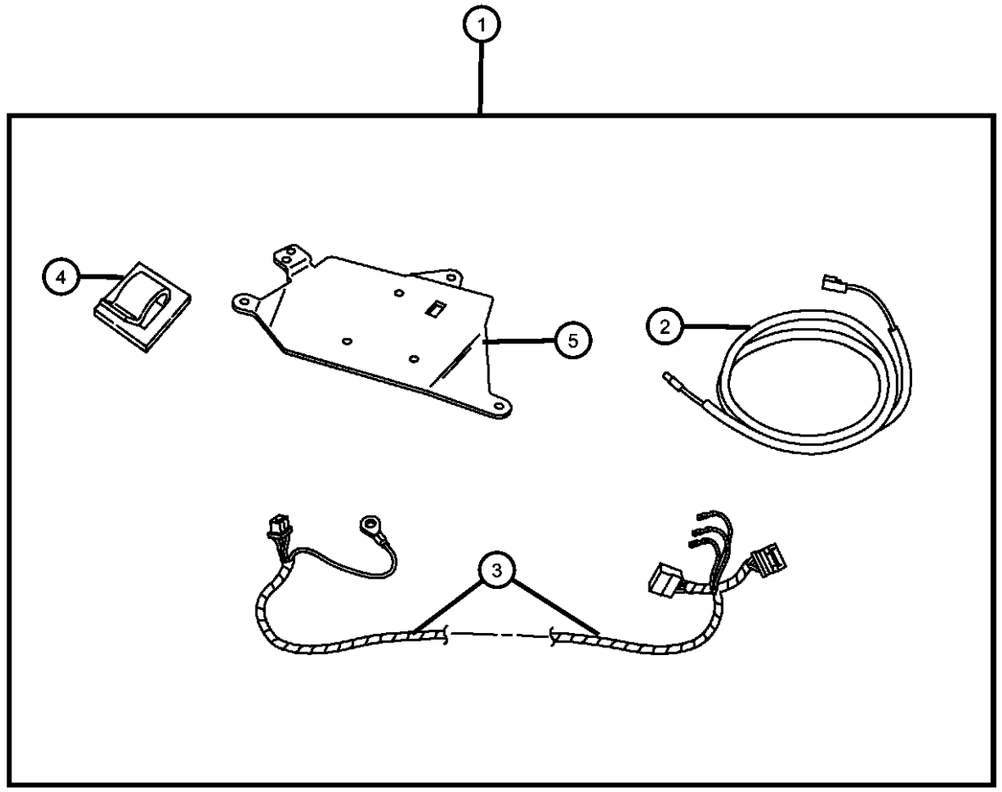

ITEM	PART NUMBER	QTY	LINE	SERIES	BODY	ENGINE	TRANS	TRIM	DESCRIPTION
1	82209500AB	1							INSTALL KIT, Satelite Receiver
2	05183898AA	1							CABLE, Antenna
3	05159035AA	1							HARNESS, Overlay
4	05142940AA	1							CLIP
5	05183897AA	1							BRACKET, Radio

COMPASS/PATRIOT (MK)

SERIES	LINE	BODY	ENGINE	TRANSMISSION
H = HIGHLINE L = LOWLINE P = PREMIUM	J = JEEP - 4WD T = JEEP - 2WD	49 = HATCHBACK TYPE #2 74 = SPORT UTILITY 4-DR TYPE #4	ED3 = 2.4L 4 Cyl DOHC 16V Dual VVT Engine	DD7 = 5-Speed Manual T355 Transmission DEF = 6-Speed Manual Aisin BG6 Trans DAV = Continuously Variable Transmission DAW = Cont.Var. w/Off-Rd Crawl Ratio Trans

Video Entertainment System-Compass
Figure 1-110

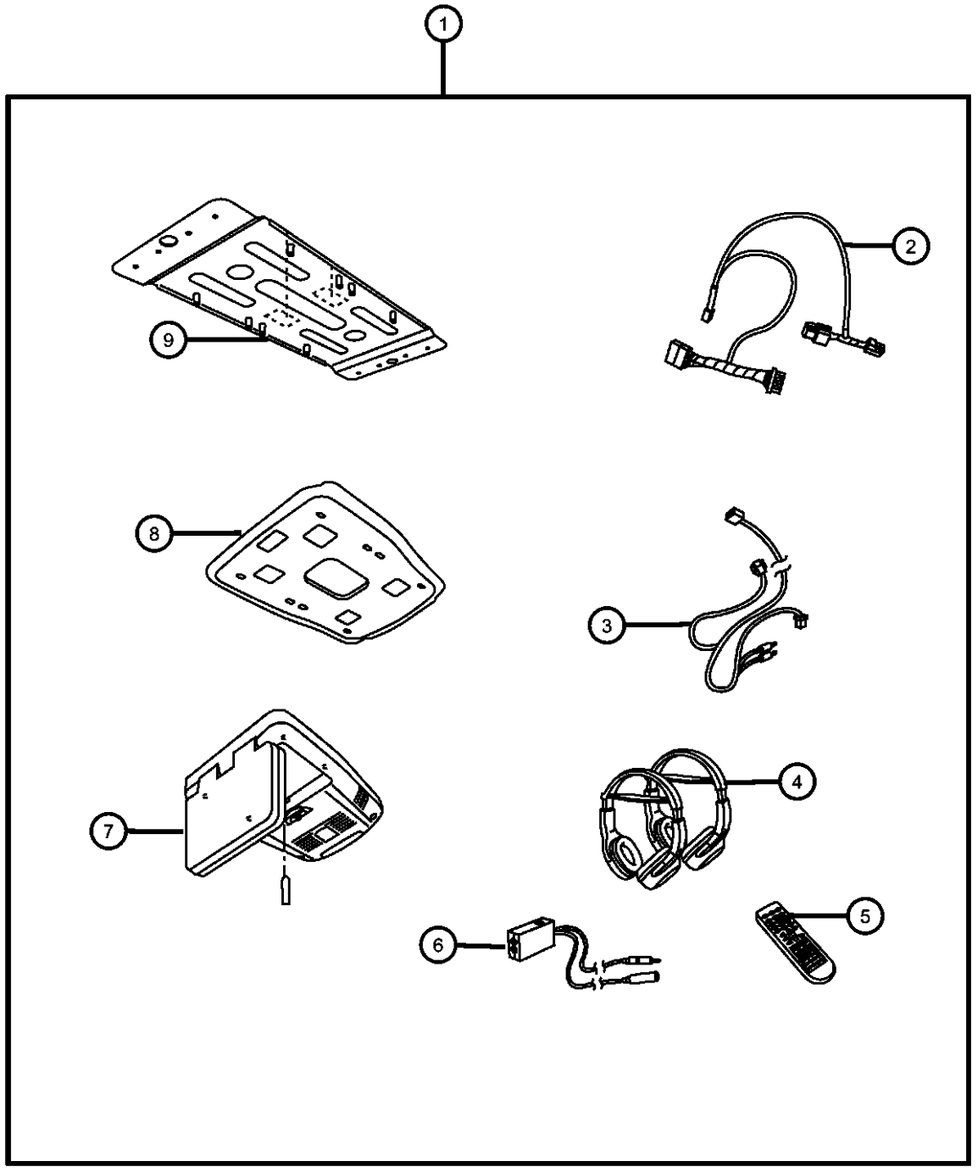

ITEM	PART NUMBER	QTY	LINE	SERIES	BODY	ENGINE	TRANS	TRIM	DESCRIPTION
1	82210358	1			49				MEDIA SYSTEM, Monitor with DVD
2	05191900AA	1			49				HARNESS, Wiring
3	05166870AA	1			49				HARNESS, Wiring
4	05064037AA	1			49				HEADPHONES, Wireless
5	05166873AA	1			49				REMOTE, Wireless Infrared
6	05166872AA	1			49				MODULATOR, FM
7	05166869AA	1			49				MEDIA SYSTEM, Monitor with DVD
8	68001720AA	1			49				SHROUD, SHROUD
9	68001717AA	1			49				BRACKET, Mounting

COMPASS/PATRIOT (MK)

SERIES	LINE	BODY	ENGINE	TRANSMISSION
H = HIGHLINE L = LOWLINE P = PREMIUM	J = JEEP - 4WD T = JEEP - 2WD	49 = HATCHBACK TYPE #2 74 = SPORT UTILITY 4-DR TYPE #4	ED3 = 2.4L 4 Cyl DOHC 16V Dual VVT Engine	DD7 = 5-Speed Manual T355 Transmission DEF = 6-Speed Manual Aisin BG6 Trans DAV = Continuously Variable Transmission DAW = Cont.Var. w/Off-Rd Crawl Ratio Trans

Video Entertainment System-Patriot
Figure 1-115

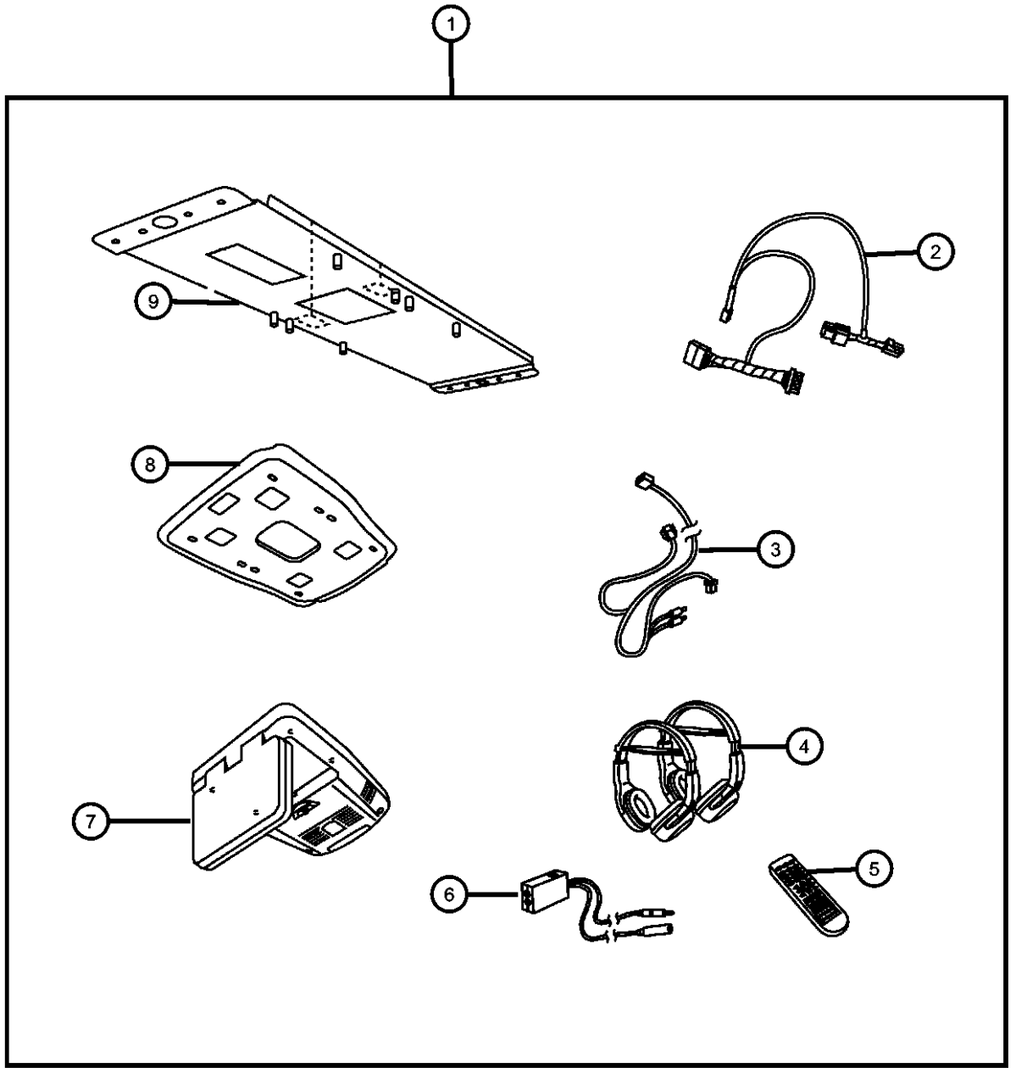

ITEM	PART NUMBER	QTY	LINE	SERIES	BODY	ENGINE	TRANS	TRIM	DESCRIPTION
1	82210468	1			74				MEDIA SYSTEM, Monitor with DVD
2	05191900AA	1			74				HARNESS, Wiring
3	05166870AA	1			74				HARNESS, Wiring
4	05064037AA	1			74				HEADPHONES, Wireless
5	05166873AA	1			74				REMOTE, Wireless Infrared
6	05166872AA	1			74				MODULATOR, FM
7	05166869AA	1			74				MEDIA SYSTEM, Monitor with DVD
8	68001721AA	1			74				SHROUD, SHROUD
9	68001718AA	1			74				BRACKET, Mounting

COMPASS/PATRIOT (MK)

SERIES	LINE	BODY	ENGINE	TRANSMISSION
H = HIGHLINE L = LOWLINE P = PREMIUM	J = JEEP - 4WD T = JEEP - 2WD	49 = HATCHBACK TYPE #2 74 = SPORT UTILITY 4-DR TYPE #4	ED3 = 2.4L 4 Cyl DOHC 16V Dual VVT Engine	DD7 = 5-Speed Manual T355 Transmission DEF = 6-Speed Manual Aisin BG6 Trans DAV = Continuously Variable Transmission DAW = Cont.Var. w/Off-Rd Crawl Ratio Trans

Navigation Kit [REC]
Figure 1-120

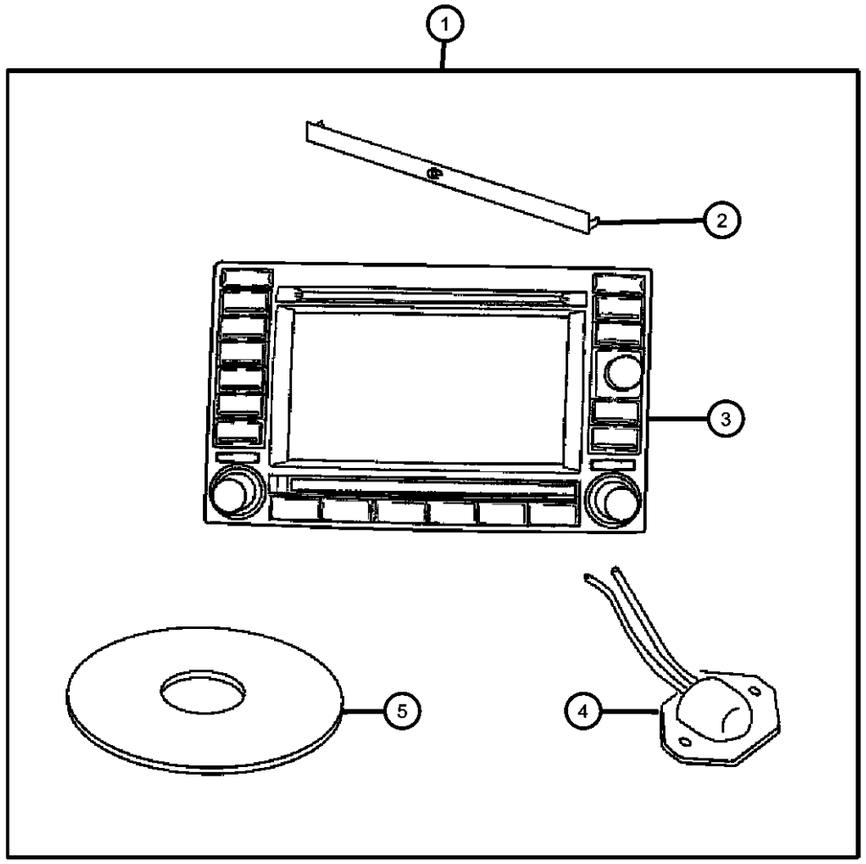

ITEM	PART NUMBER	QTY	LINE	SERIES	BODY	ENGINE	TRANS	TRIM	DESCRIPTION
Note: For Warranty Repair on Item 2, Order Using Z Prefix									
1	82208653AI	1							RADIO, AM/FM CD W/NAV/DVD & CD-CTRL, [REC]
2	05161571AA	1							COVER, Radio
3	82208653AI	1							RADIO, AM/FM CD W/NAV/DVD & CD-CTRL
4	56038630AA	1							ANTENNA, GPS
5	05064033AE	1							DVD, Geographic Database

COMPASS/PATRIOT (MK)

SERIES	LINE	BODY	ENGINE	TRANSMISSION
H = HIGHLINE L = LOWLINE P = PREMIUM	J = JEEP - 4WD T = JEEP - 2WD	49 = HATCHBACK TYPE #2 74 = SPORT UTILITY 4-DR TYPE #4	ED3 = 2.4L 4 Cyl DOHC 16V Dual VVT Engine	DD7 = 5-Speed Manual T355 Transmission DEF = 6-Speed Manual Aisin BG6 Trans DAV = Continuously Variable Transmission DAW = Cont.Var. w/Off-Rd Crawl Ratio Trans

Navigation Kit - Stand Alone
Figure 1-125

ITEM	PART NUMBER	QTY	LINE	SERIES	BODY	ENGINE	TRANS	TRIM	DESCRIPTION
1	82209850	1							NAVIGATION KIT, Vehicle
2	05175003AA	1							WIRING, Navigation Display
3	05175002AA	1							MODULE, Navigation Display
-4	05175839AA	1							COVER, Radio
-5	05175016AA	1							MEMORY CARD, Map Data

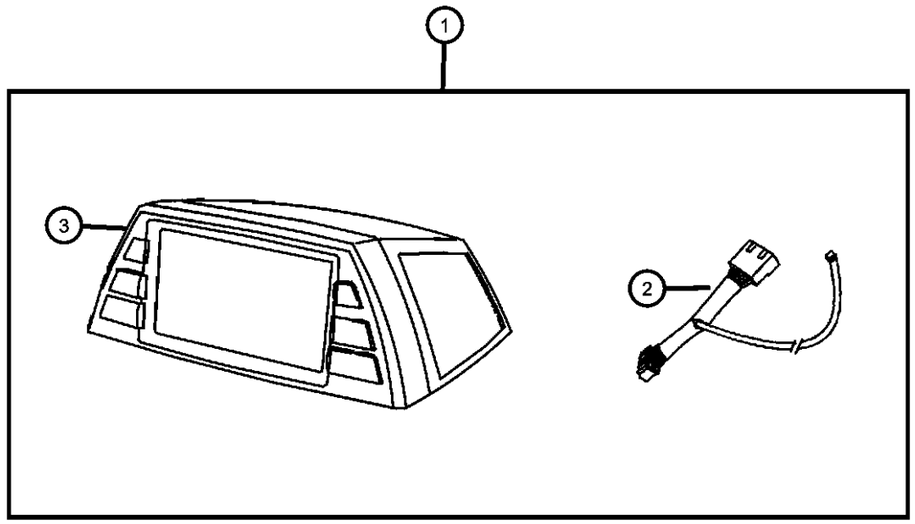

COMPASS/PATRIOT (MK)

SERIES	LINE	BODY	ENGINE	TRANSMISSION
H = HIGHLINE L = LOWLINE P = PREMIUM	J = JEEP - 4WD T = JEEP - 2WD	49 = HATCHBACK TYPE #2 74 = SPORT UTILITY 4-DR TYPE #4	ED3 = 2.4L 4 Cyl DOHC 16V Dual VVT Engine	DD7 = 5-Speed Manual T355 Transmission DEF = 6-Speed Manual Aisin BG6 Trans DAV = Continuously Variable Transmission DAW = Cont.Var. w/Off-Rd Crawl Ratio Trans

Module Kit-IPod Adapter
Figure 1-130

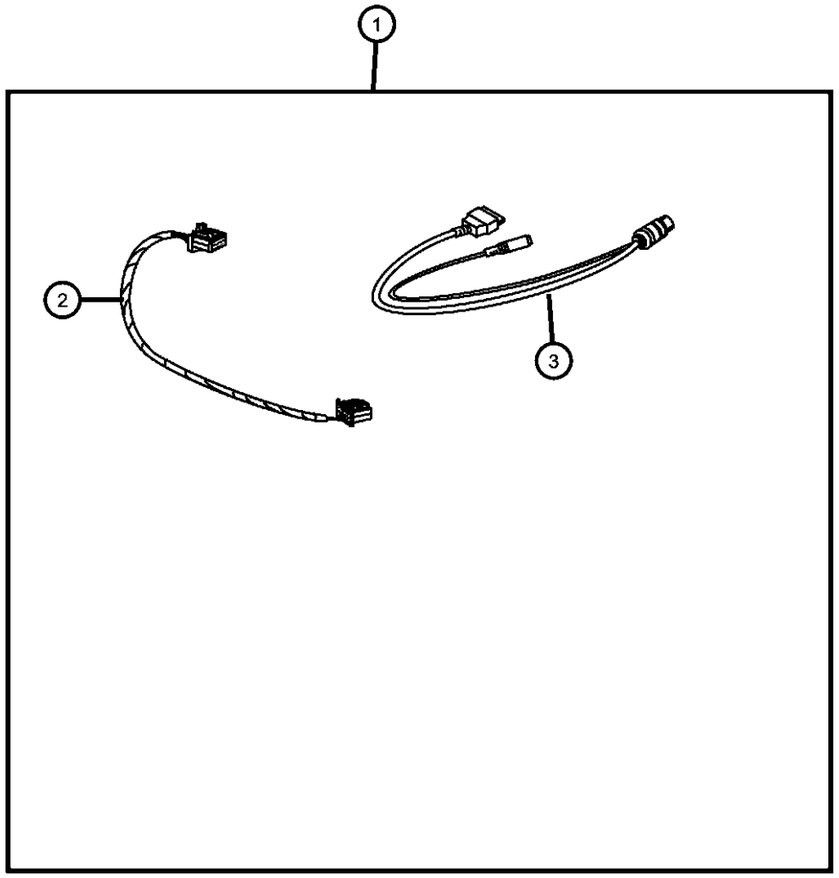

ITEM	PART NUMBER	QTY	LINE	SERIES	BODY	ENGINE	TRANS	TRIM	DESCRIPTION
1	82209617	1							MODULE KIT, IPOD Interface
2	68029468AA	1							CABLE
3	68029461AA	1							CABLE

COMPASS/PATRIOT (MK)

SERIES	LINE	BODY	ENGINE	TRANSMISSION
H = HIGHLINE L = LOWLINE P = PREMIUM	J = JEEP - 4WD T = JEEP - 2WD	49 = HATCHBACK TYPE #2 74 = SPORT UTILITY 4-DR TYPE #4	ED3 = 2.4L 4 Cyl DOHC 16V Dual VVT Engine	DD7 = 5-Speed Manual T355 Transmission DEF = 6-Speed Manual Aisin BG6 Trans DAV = Continuously Variable Transmission DAW = Cont.Var. w/Off-Rd Crawl Ratio Trans

FMiPod Adapter
Figure 1-135

ITEM	PART NUMBER	QTY	LINE	SERIES	BODY	ENGINE	TRANS	TRIM	DESCRIPTION
1	82210181	1							MODULE KIT, IPOD Interface
2	68001396AA	1							HARNESS, Jumper
3	68001396AA	1							TRANSMITTER, (NOT SERVICED)
4	68024675AA	1							HARDWARE

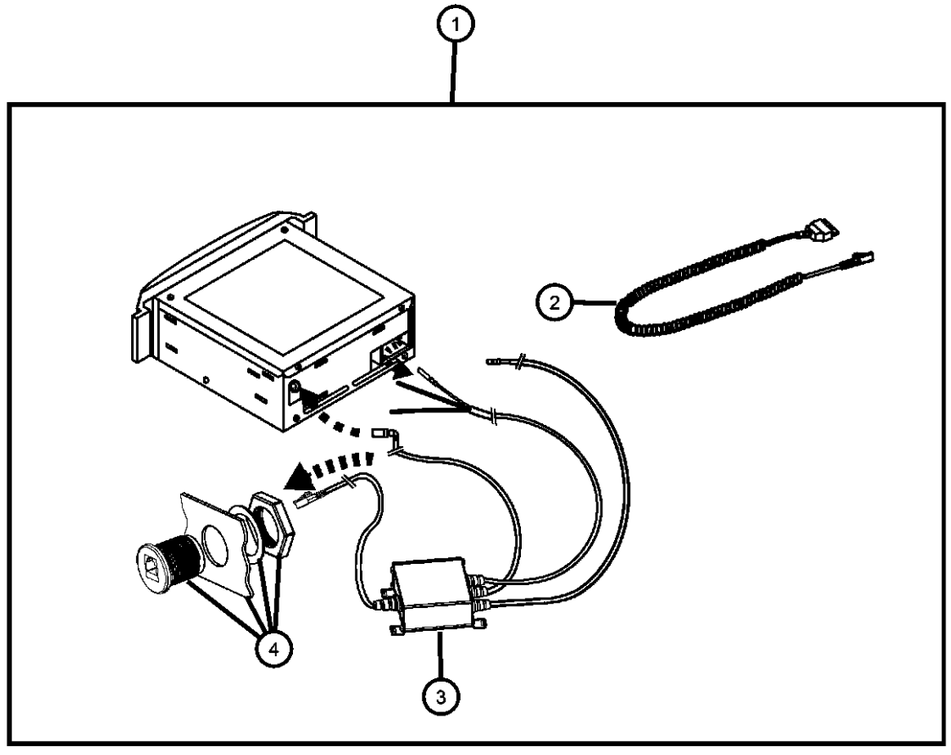

COMPASS/PATRIOT (MK)

SERIES	LINE	BODY	ENGINE	TRANSMISSION
H = HIGHLINE L = LOWLINE P = PREMIUM	J = JEEP - 4WD T = JEEP - 2WD	49 = HATCHBACK TYPE #2 74 = SPORT UTILITY 4-DR TYPE #4	ED3 = 2.4L 4 Cyl DOHC 16V Dual VVT Engine	DD7 = 5-Speed Manual T355 Transmission DEF = 6-Speed Manual Aisin BG6 Trans DAV = Continuously Variable Transmission DAW = Cont.Var. w/Off-Rd Crawl Ratio Trans

Bike Carrier - Roof - Upright Mount
Figure 1-205

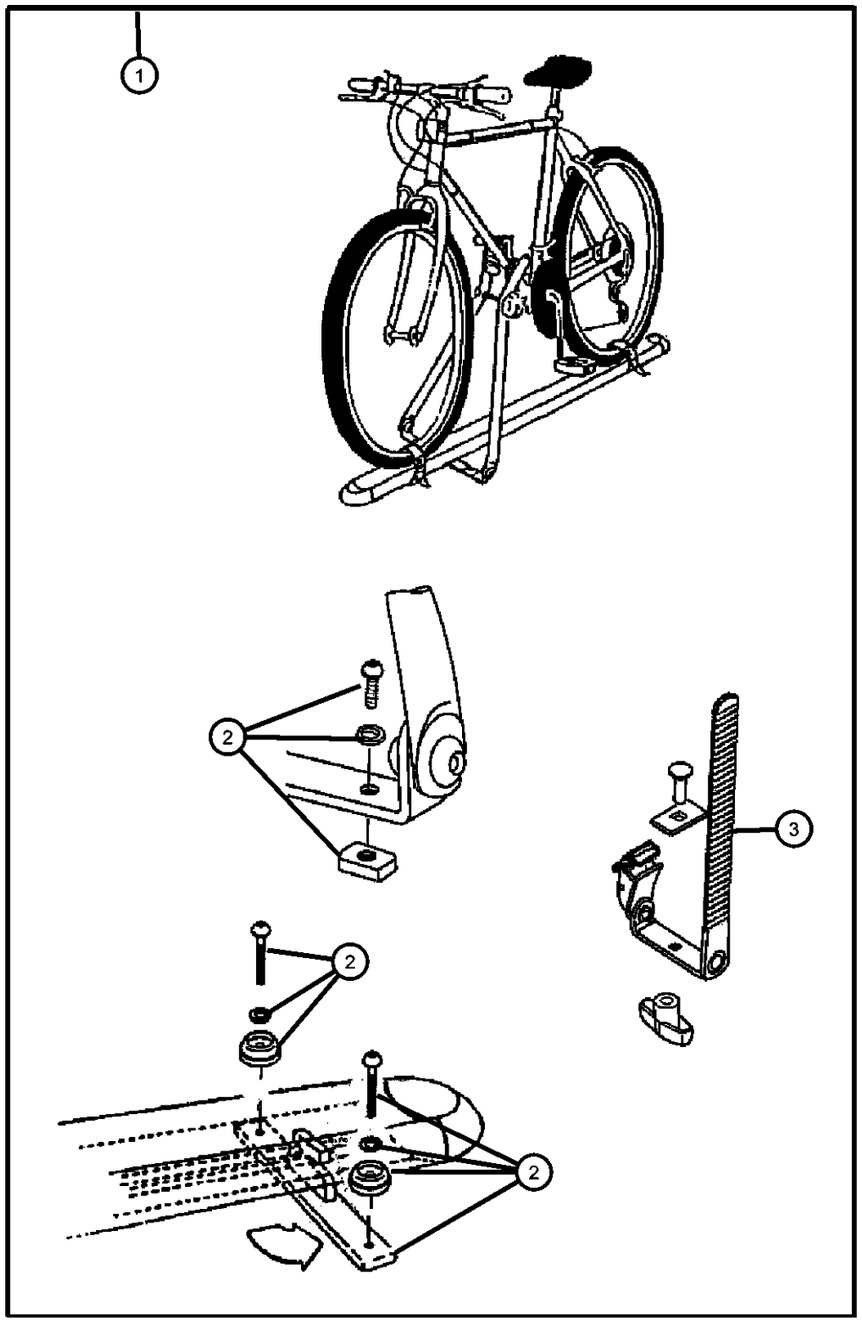

ITEM	PART NUMBER	QTY	LINE	SERIES	BODY	ENGINE	TRANS	TRIM	DESCRIPTION
Note; Requires Sport Utility Rack									
1	82207942	1			49				CARRIER KIT, Bike, Upright - Mount
2	05093779AA	1			49				HARDWARE KIT, Accessory, Contains:2-T-Slot Anchors,1-RR T-Slot Bar,4-Button Head Screws,2-Lockwashers,4-Round Dome Washers
3	05114532AA	1			49				STRAP, Cargo Tie Down

COMPASS/PATRIOT (MK)

SERIES	LINE	BODY	ENGINE	TRANSMISSION
H = HIGHLINE L = LOWLINE P = PREMIUM	J = JEEP - 4WD T = JEEP - 2WD	49 = HATCHBACK TYPE #2 74 = SPORT UTILITY 4-DR TYPE #4	ED3 = 2.4L 4 Cyl DOHC 16V Dual VVT Engine	DD7 = 5-Speed Manual T355 Transmission DEF = 6-Speed Manual Aisin BG6 Trans DAV = Continuously Variable Transmission DAW = Cont.Var. w/Off-Rd Crawl Ratio Trans

Bike Carrier -Hitch Mount
Figure 1-210

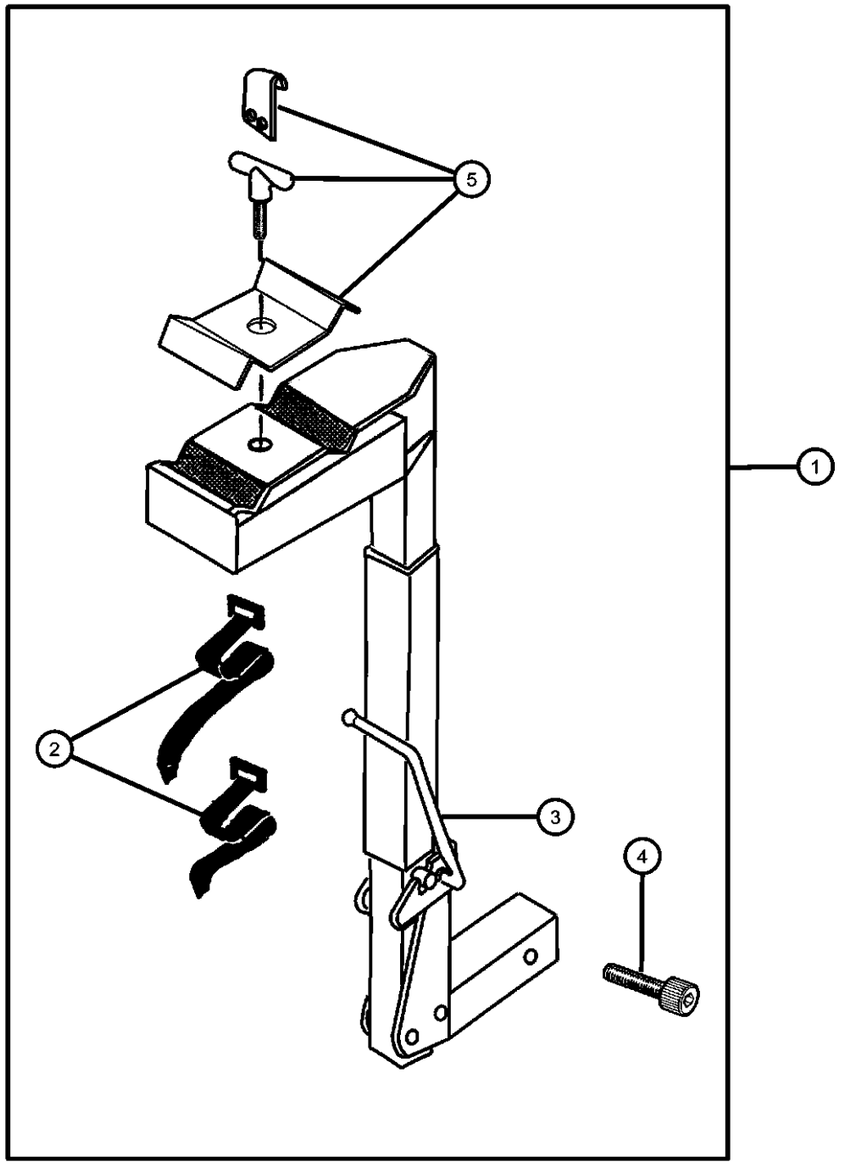

ITEM	PART NUMBER	QTY	LINE	SERIES	BODY	ENGINE	TRANS	TRIM	DESCRIPTION
1	82204452	1							CARRIER KIT, Bike
2	04762880	1							STRAP KIT, Velcro
3	05016775AA	1							STRAP KIT, Bike Carrier Latch
4	05016774AA	1							BOLT KIT, Security, Contains: Security Bolt & Wrench, Washer & Nut
5	05018825AA	1							HARDWARE KIT, Bike Carrier, Contains: T-Handle,Lock Strap, Top Clamp Assy. & Nylon Washer

COMPASS/PATRIOT (MK)

SERIES	LINE	BODY	ENGINE	TRANSMISSION
H = HIGHLINE L = LOWLINE P = PREMIUM	J = JEEP - 4WD T = JEEP - 2WD	49 = HATCHBACK TYPE #2 74 = SPORT UTILITY 4-DR TYPE #4	ED3 = 2.4L 4 Cyl DOHC 16V Dual VVT Engine	DD7 = 5-Speed Manual T355 Transmission DEF = 6-Speed Manual Aisin BG6 Trans DAV = Continuously Variable Transmission DAW = Cont.Var. w/Off-Rd Crawl Ratio Trans

Bike Carrier-Roof-Fork Mount
Figure 1-215

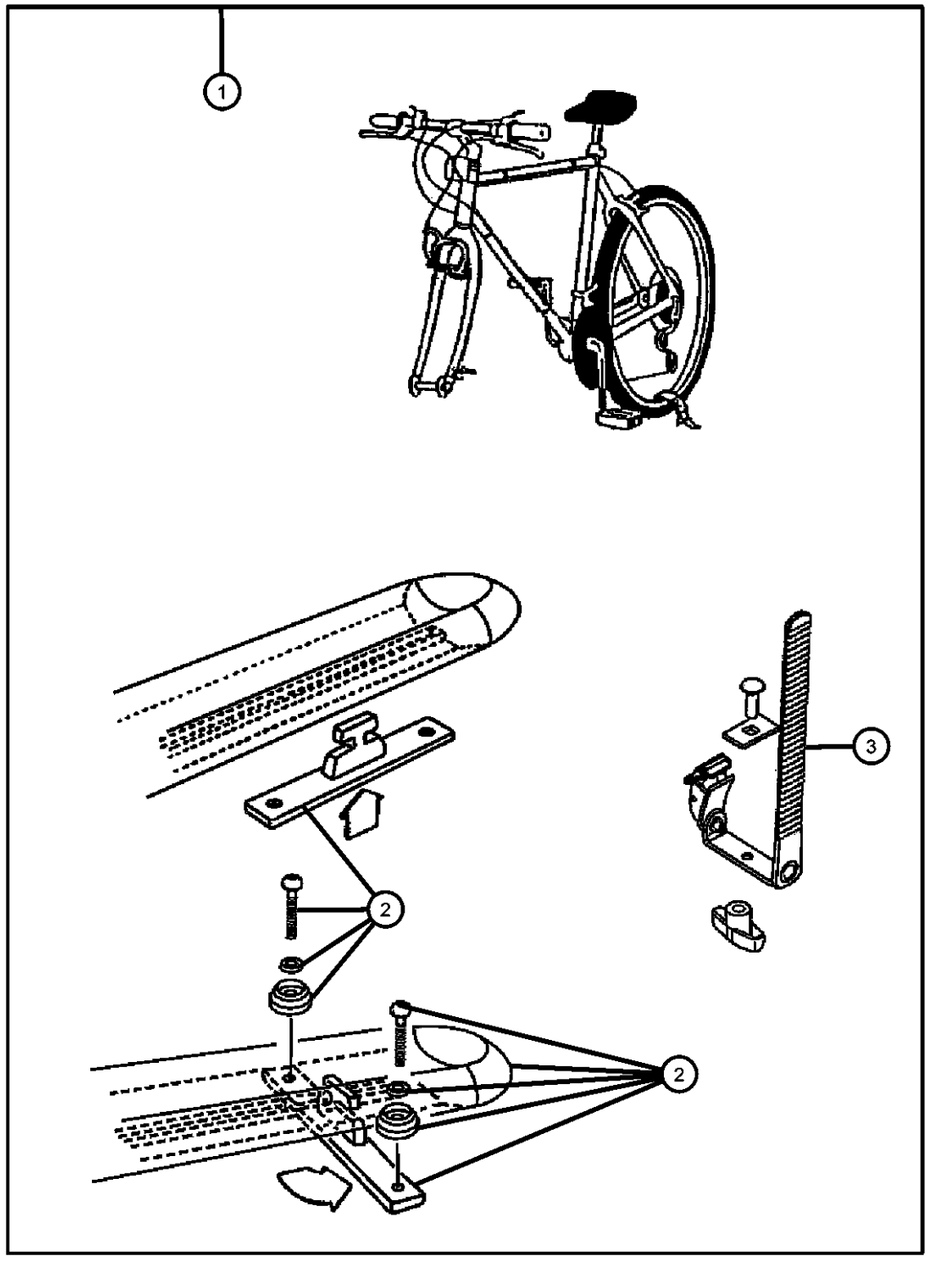

ITEM	PART NUMBER	QTY	LINE	SERIES	BODY	ENGINE	TRANS	TRIM	DESCRIPTION
Note; Requires Sport Utility Rack									
1	82207943	1			49				CARRIER KIT, Bike, Fork - Mount
2	05093779AA	1			49				HARDWARE KIT, Accessory, Contains: 2-T-Slot Anchor, 1-RR T-Slot Bar,4-Button Head Screws,2-Lockwashers,4-Round Dome Washers
3	05114532AA	1			49				STRAP, Cargo Tie Down

COMPASS/PATRIOT (MK)

SERIES	LINE	BODY	ENGINE	TRANSMISSION
H = HIGHLINE L = LOWLINE P = PREMIUM	J = JEEP - 4WD T = JEEP - 2WD	49 = HATCHBACK TYPE #2 74 = SPORT UTILITY 4-DR TYPE #4	ED3 = 2.4L 4 Cyl DOHC 16V Dual VVT Engine	DD7 = 5-Speed Manual T355 Transmission DEF = 6-Speed Manual Aisin BG6 Trans DAV = Continuously Variable Transmission DAW = Cont.Var. w/Off-Rd Crawl Ratio Trans

Luggage Carrier-Roof-Vinyl
Figure 1-220

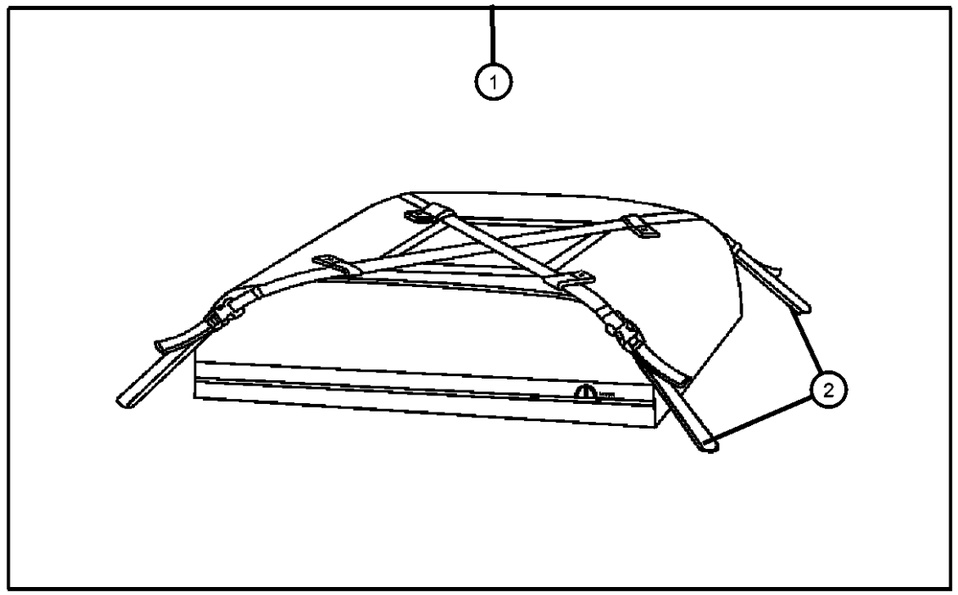

ITEM	PART NUMBER	QTY	LINE	SERIES	BODY	ENGINE	TRANS	TRIM	DESCRIPTION
Note; Sport Utility or Production Rack Required									
1	82207198	1			49				CARRIER KIT, Luggage
2	05066332AA	1			49				STRAP KIT, Luggage Carrier

COMPASS/PATRIOT (MK)

SERIES	LINE	BODY	ENGINE	TRANSMISSION
H = HIGHLINE L = LOWLINE P = PREMIUM	J = JEEP - 4WD T = JEEP - 2WD	49 = HATCHBACK TYPE #2 74 = SPORT UTILITY 4-DR TYPE #4	ED3 = 2.4L 4 Cyl DOHC 16V Dual VVT Engine	DD7 = 5-Speed Manual T355 Transmission DEF = 6-Speed Manual Aisin BG6 Trans DAV = Continuously Variable Transmission DAW = Cont.Var. w/Off-Rd Crawl Ratio Trans

Ski Carrier-Roof Mount
Figure 1-225

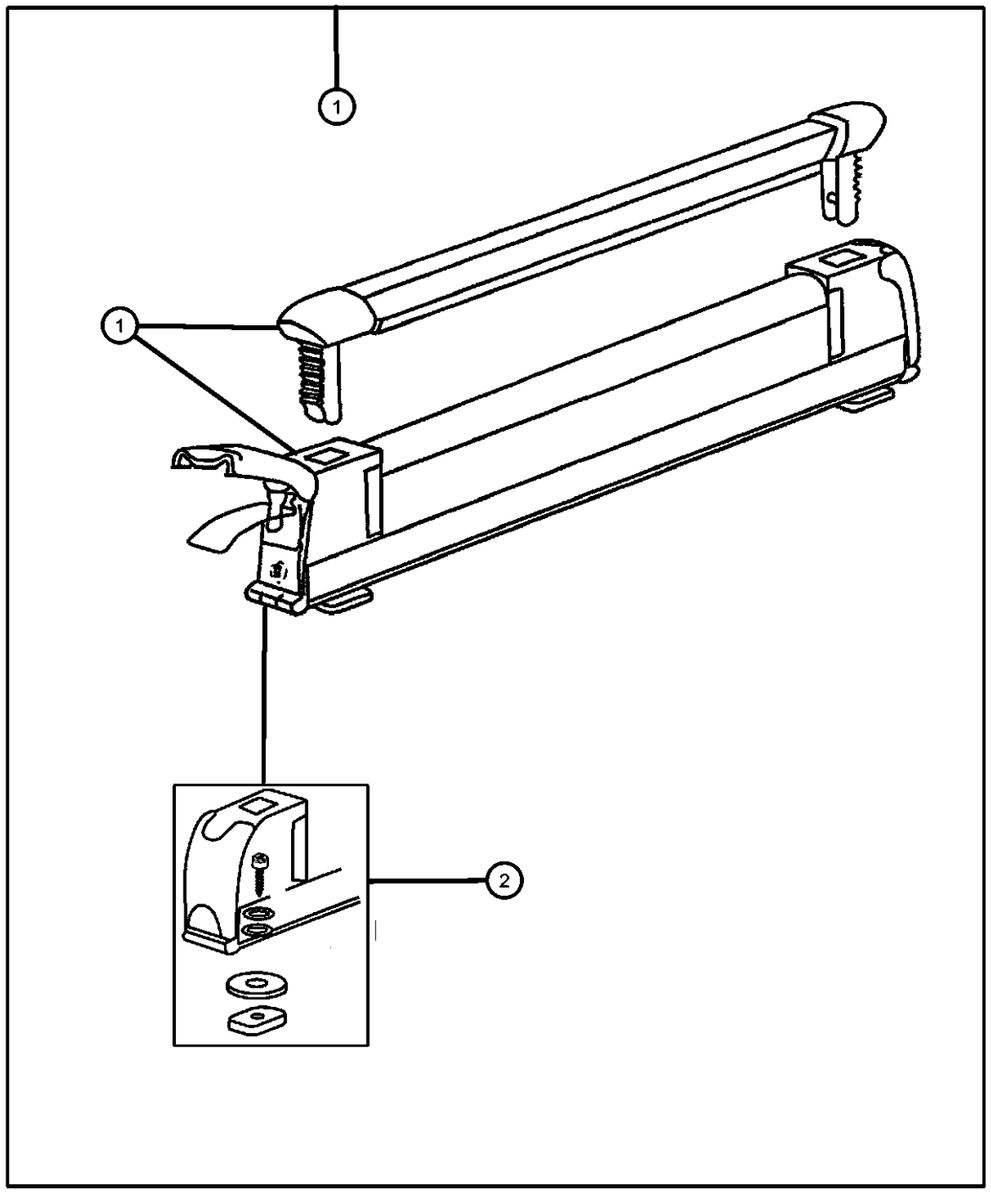

ITEM	PART NUMBER	QTY	LINE	SERIES	BODY	ENGINE	TRANS	TRIM	DESCRIPTION
Note; Requires Sport Utility Rack									
1	82207308	1			49				CARRIER KIT, Ski
2	05086158AA	1			49				HARDWARE KIT, Accessory, Contains: 4-25MM Screws,4-16MM Screws,4-20MM Screws,4-Lockwashers 4-Flat Washer,4-T-Plates & 4-Rubber Washers
-3	05066632AA	1			49				TOOL, Screw Driver

COMPASS/PATRIOT (MK)

SERIES	LINE	BODY	ENGINE	TRANSMISSION
H = HIGHLINE L = LOWLINE P = PREMIUM	J = JEEP - 4WD T = JEEP - 2WD	49 = HATCHBACK TYPE #2 74 = SPORT UTILITY 4-DR TYPE #4	ED3 = 2.4L 4 Cyl DOHC 16V Dual VVT Engine	DD7 = 5-Speed Manual T355 Transmission DEF = 6-Speed Manual Aisin BG6 Trans DAV = Continuously Variable Transmission DAW = Cont.Var. w/Off-Rd Crawl Ratio Trans

Ski Carrier-Ski or Snowboard
Figure 1-230

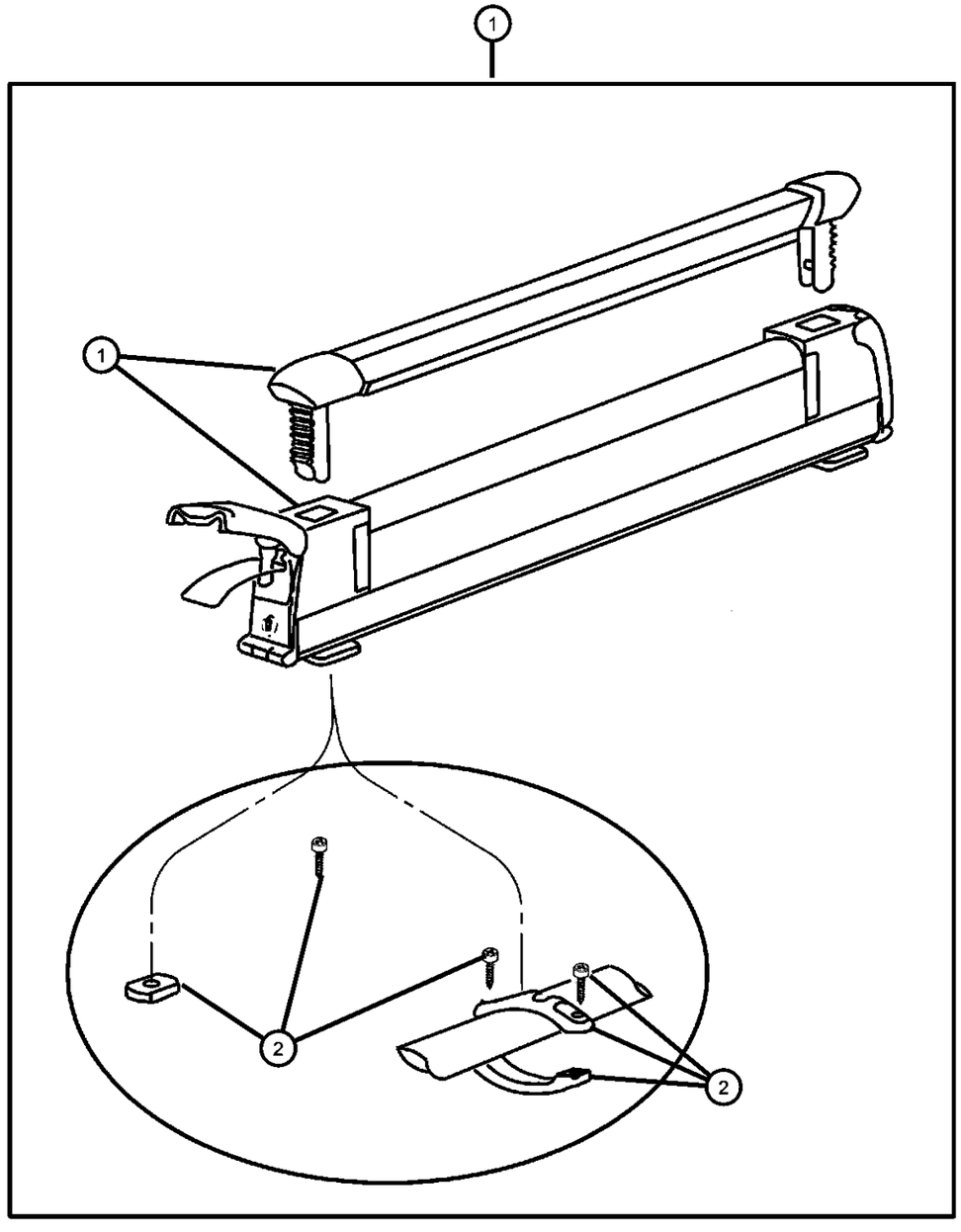

ITEM	PART NUMBER	QTY	LINE	SERIES	BODY	ENGINE	TRANS	TRIM	DESCRIPTION
1	82207312	1			74				CARRIER KIT, Ski
2	05086158AA	1			74				HARDWARE KIT, Accessory, Contains: 4-25MM Screws,4-16MM Screws,4-20MM Screws, 4-Lockwashers,4-Flat Washers,4-T-Plates & 4-Rubber Washers
-3	05066632AA	1			74				TOOL, Screw Driver

COMPASS/PATRIOT (MK)

SERIES	LINE	BODY	ENGINE	TRANSMISSION
H = HIGHLINE L = LOWLINE P = PREMIUM	J = JEEP - 4WD T = JEEP - 2WD	49 = HATCHBACK TYPE #2 74 = SPORT UTILITY 4-DR TYPE #4	ED3 = 2.4L 4 Cyl DOHC 16V Dual VVT Engine	DD7 = 5-Speed Manual T355 Transmission DEF = 6-Speed Manual Aisin BG6 Trans DAV = Continuously Variable Transmission DAW = Cont.Var. w/Off-Rd Crawl Ratio Trans

Carrier Kit - Canoe
Figure 1-235

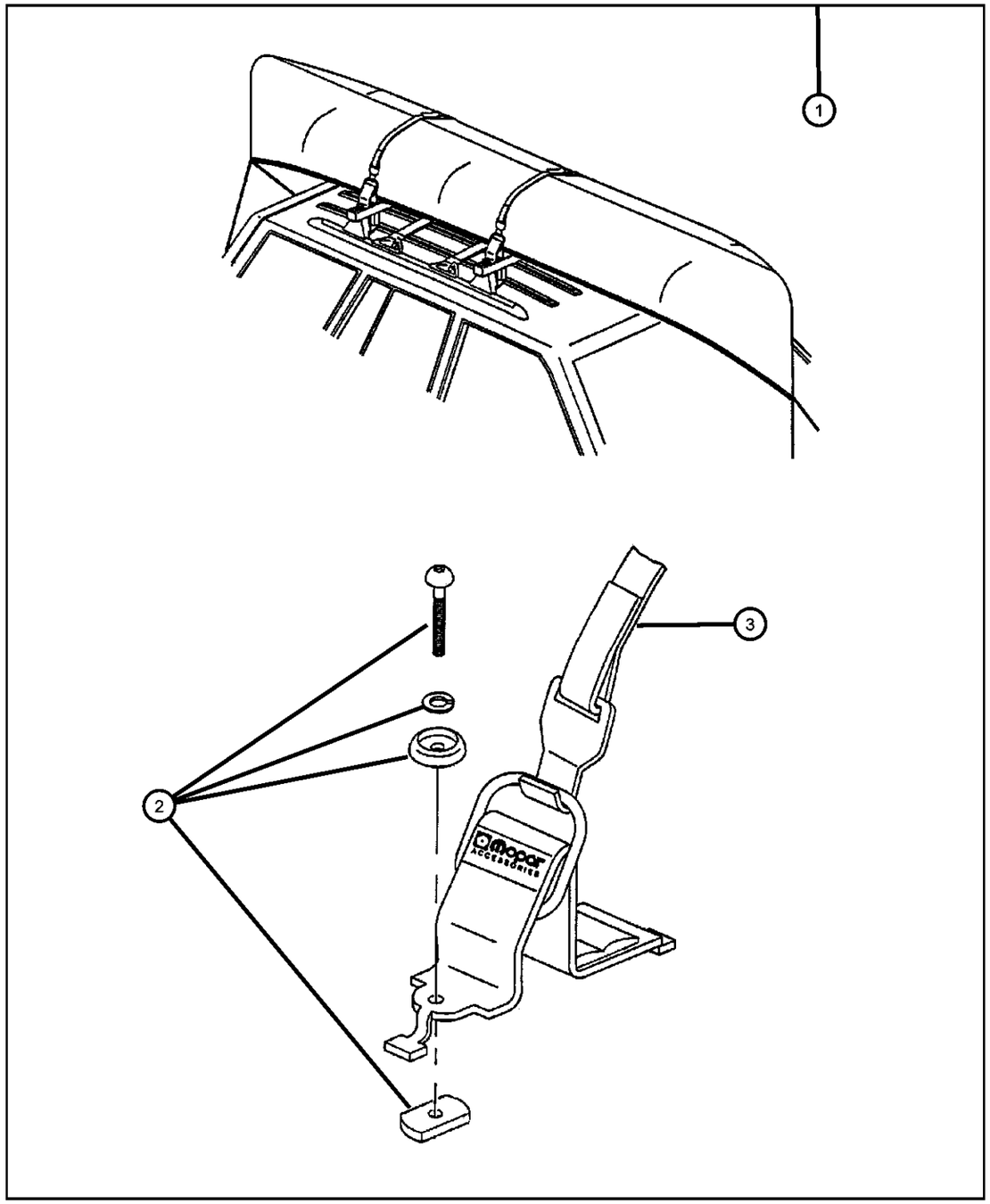

ITEM	PART NUMBER	QTY	LINE	SERIES	BODY	ENGINE	TRANS	TRIM	DESCRIPTION
Note; Requires Sport Utlity Rack									
1	82204700	1							CARRIER KIT, Canoe
2	05016389AA	1							HARDWARE KIT, Accessory, Contains: 4-25MM Button Head Screws,4-30MM Button Head Screws,4-Lockwashers, 4-Dome Washers,4-Rubber Washers & 4-T-Nuts
3	05016511AA	1							STRAP, Cargo Tie Down

COMPASS/PATRIOT (MK)

SERIES	LINE	BODY	ENGINE	TRANSMISSION
H = HIGHLINE L = LOWLINE P = PREMIUM	J = JEEP - 4WD T = JEEP - 2WD	49 = HATCHBACK TYPE #2 74 = SPORT UTILITY 4-DR TYPE #4	ED3 = 2.4L 4 Cyl DOHC 16V Dual VVT Engine	DD7 = 5-Speed Manual T355 Transmission DEF = 6-Speed Manual Aisin BG6 Trans DAV = Continuously Variable Transmission DAW = Cont.Var. w/Off-Rd Crawl Ratio Trans

Carrier Kit-Water Sports
Figure 1-240

ITEM	PART NUMBER	QTY	LINE	SERIES	BODY	ENGINE	TRANS	TRIM	DESCRIPTION
Note; Requires Sport Utility Rack									
1	82205416	1							CARRIER KIT, Water Sports
2	05016389AA	1							HARDWARE KIT, Accessory, Contains: 4-25MM Button Head Screws,4-30MM Button Head Screws,4-lockwashers,4-Dome Washers,4-Rubber Washers & 4-T-Nuts
3	05016511AA	1							STRAP, Cargo Tie Down

COMPASS/PATRIOT (MK)

SERIES	LINE	BODY	ENGINE	TRANSMISSION
H = HIGHLINE L = LOWLINE P = PREMIUM	J = JEEP - 4WD T = JEEP - 2WD	49 = HATCHBACK TYPE #2 74 = SPORT UTILITY 4-DR TYPE #4	ED3 = 2.4L 4 Cyl DOHC 16V Dual VVT Engine	DD7 = 5-Speed Manual T355 Transmission DEF = 6-Speed Manual Aisin BG6 Trans DAV = Continuously Variable Transmission DAW = Cont.Var. w/Off-Rd Crawl Ratio Trans

Speed Control Kit-Patriot
Figure 1-305

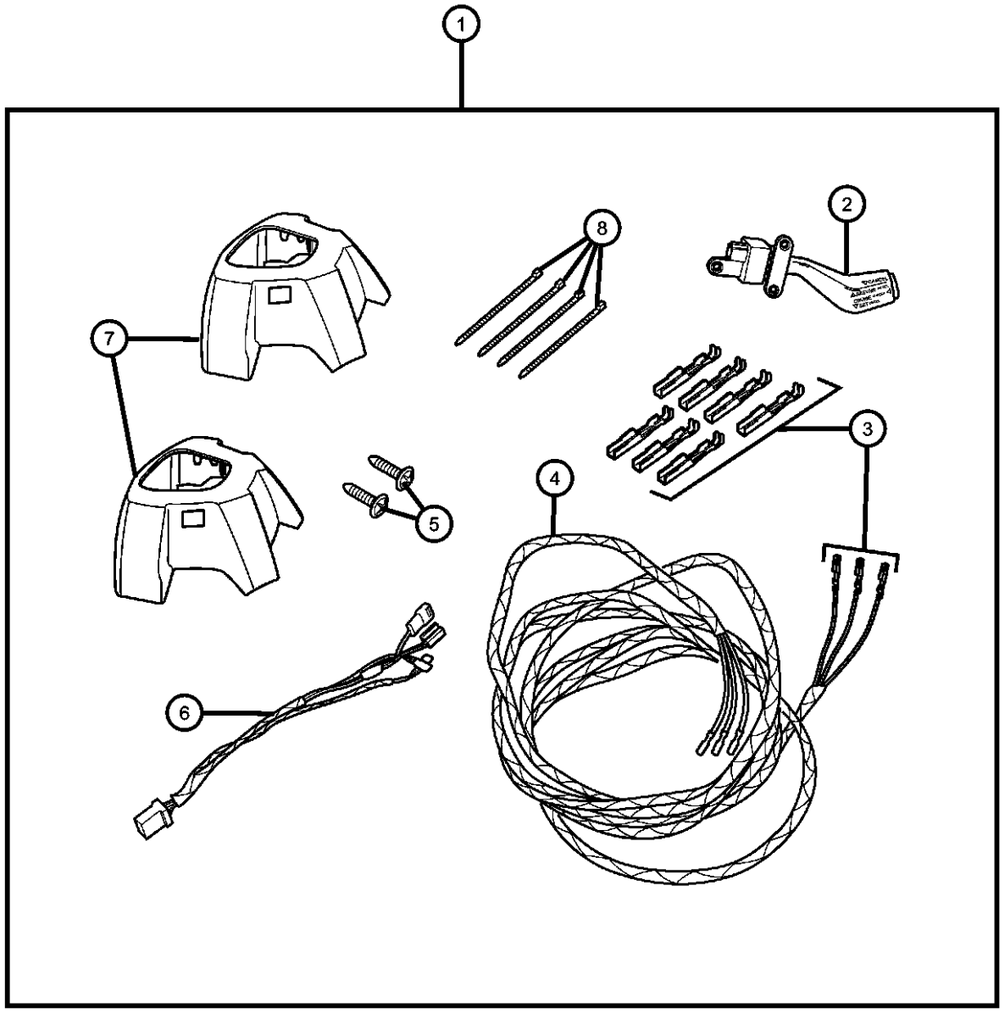

ITEM	PART NUMBER	QTY	LINE	SERIES	BODY	ENGINE	TRANS	TRIM	DESCRIPTION
1	82210878	1			74				CONTROL PACKAGE, Speed Control
2	04671929AA	1			74				SWITCH, Speed Control
3	68021170AA	1			74				TERMINAL
4	68021639AA	1			74				HARNESS, Overlay
5	68021639AA	1							SCREW, Serviced in Assy., (NOT SERVICED)
6	68000462AB	1			74				WIRING, Steering Wheel
7									COVER, Steering Wheel Back
	1EB84DK7AB	1	J, T, U		49, 74				[DK7]
	1EB84XDVAB	1	J, T, U		49, 74				[XDV]
8	06015756	1			74				STRAP, Tie, Quantity of 4

COMPASS/PATRIOT (MK)

SERIES	LINE	BODY	ENGINE	TRANSMISSION
H = HIGHLINE L = LOWLINE P = PREMIUM	J = JEEP - 4WD T = JEEP - 2WD	49 = HATCHBACK TYPE #2 74 = SPORT UTILITY 4-DR TYPE #4	ED3 = 2.4L 4 Cyl DOHC 16V Dual VVT Engine	DD7 = 5-Speed Manual T355 Transmission DEF = 6-Speed Manual Aisin BG6 Trans DAV = Continuously Variable Transmission DAW = Cont.Var. w/Off-Rd Crawl Ratio Trans

Speed Control Kit-Compass
Figure 1-307

ITEM	PART NUMBER	QTY	LINE	SERIES	BODY	ENGINE	TRANS	TRIM	DESCRIPTION
1	82210489	1			49				CONTROL PACKAGE, Speed Control
2	04671929AA	1			49				SWITCH, Speed Control
3	04671929AA	1							SCREW, (NOT SERVICED)
4	68000462AB	1			49				WIRING, Steering Wheel
5									COVER, Steering Wheel Back
	1EB84DK7AB	1	J, T, U		49, 74				[DK7]
	1EB85XDVAB	1	J, T, U		49, 74				[XDV]

COMPASS/PATRIOT (MK)

SERIES	LINE	BODY	ENGINE	TRANSMISSION
H = HIGHLINE L = LOWLINE P = PREMIUM	J = JEEP - 4WD T = JEEP - 2WD	49 = HATCHBACK TYPE #2 74 = SPORT UTILITY 4-DR TYPE #4	ED3 = 2.4L 4 Cyl DOHC 16V Dual VVT Engine	DD7 = 5-Speed Manual T355 Transmission DEF = 6-Speed Manual Aisin BG6 Trans DAV = Continuously Variable Transmission DAW = Cont.Var. w/Off-Rd Crawl Ratio Trans

AR = use ase required - = Non illustrrated part

Remote Start
Figure 1-310

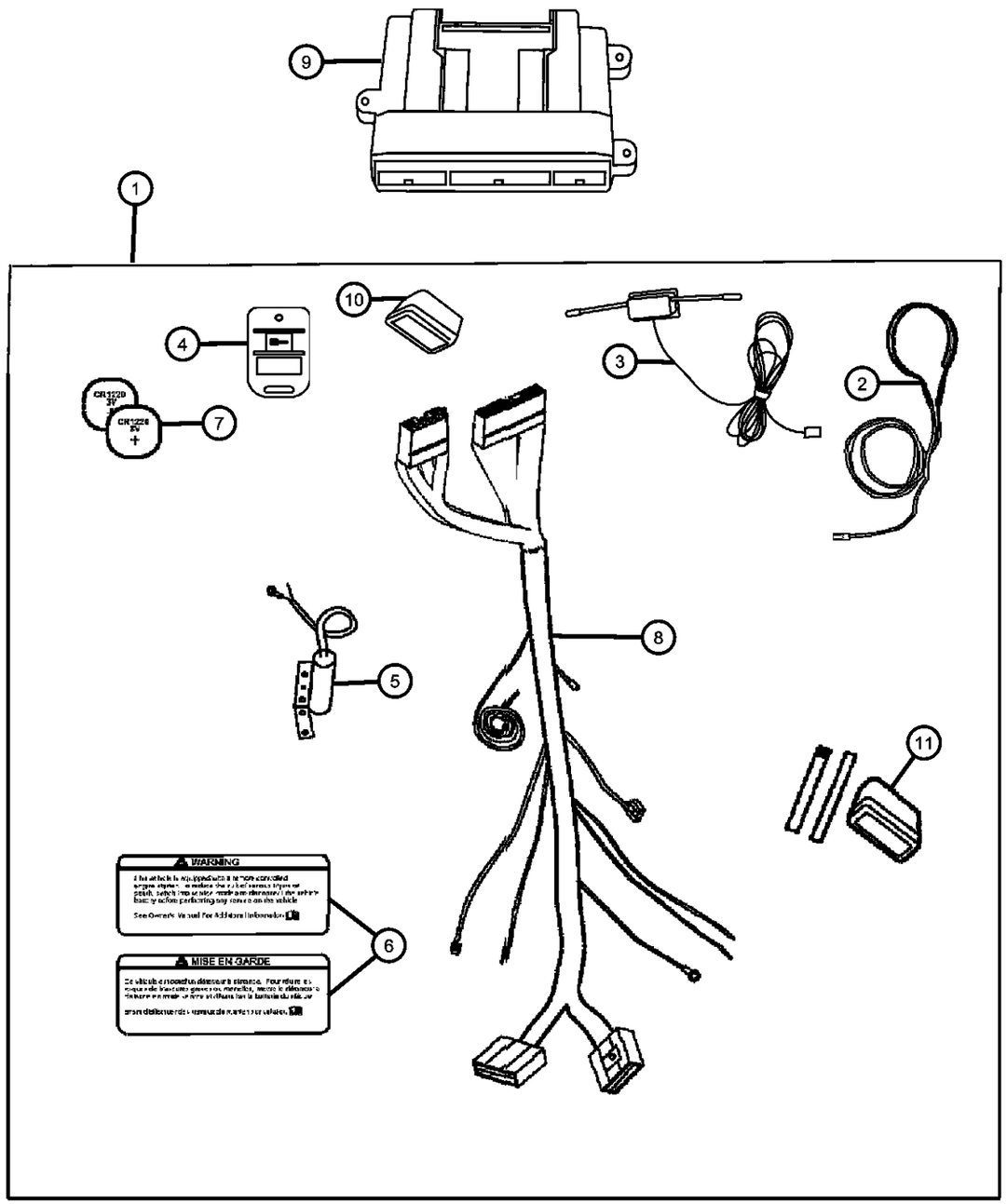

ITEM	PART NUMBER	QTY	LINE	SERIES	BODY	ENGINE	TRANS	TRIM	DESCRIPTION
NOTE: Module (Item # 9) not included in install kit, need to order separately.									
1	82209364AG	1							INSTALL KIT, REMOTE START
2	05140470AA	1							ANTENNA
3	05140471AA	1							ANTENNA
4	05140472AA	1							TRANSMITTER
5	68001331AA	1							SWITCH
6	05140474AA	1							LABEL
7	05140773AA	1							BATTERY, Transmitter
8	68021199AA	1							HARNESS, Wiring
9	82208859AB	1							MODULE KIT, REMOTE START
10	68021198AA	1							MODULE, Remote Start
11	05140468AA	1							MODULE

COMPASS/PATRIOT (MK)

SERIES	LINE	BODY	ENGINE	TRANSMISSION
H = HIGHLINE L = LOWLINE P = PREMIUM	J = JEEP - 4WD T = JEEP - 2WD	49 = HATCHBACK TYPE #2 74 = SPORT UTILITY 4-DR TYPE #4	ED3 = 2.4L 4 Cyl DOHC 16V Dual VVT Engine	DD7 = 5-Speed Manual T355 Transmission DEF = 6-Speed Manual Aisin BG6 Trans DAV = Continuously Variable Transmission DAW = Cont.Var. w/Off-Rd Crawl Ratio Trans

Sensor Package Park/Distance
Figure 1-315

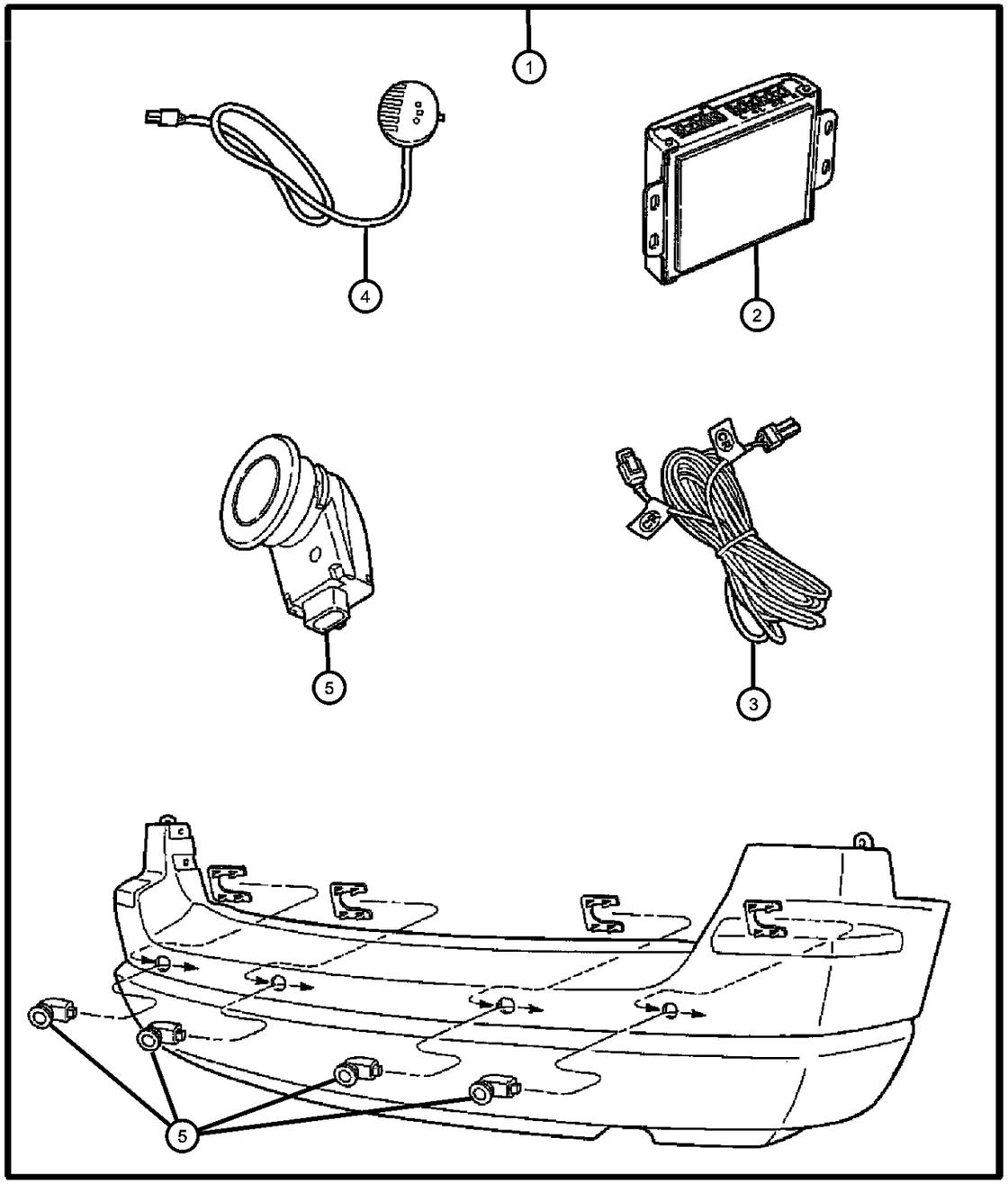

ITEM	PART NUMBER	QTY	LINE	SERIES	BODY	ENGINE	TRANS	TRIM	DESCRIPTION
1	82208246AD	1							SENSOR KIT, Park Distance
2	05137541AA	1							MODULE, Parking Assist
3	05137540AA	1							WIRING, Distance Sensor
4	05137539AA	1							DISPLAY, Parking Assist
5	05137536AA	1							SENSOR

COMPASS/PATRIOT (MK)

SERIES	LINE	BODY	ENGINE	TRANSMISSION
H = HIGHLINE L = LOWLINE P = PREMIUM	J = JEEP - 4WD T = JEEP - 2WD	49 = HATCHBACK TYPE #2 74 = SPORT UTILITY 4-DR TYPE #4	ED3 = 2.4L 4 Cyl DOHC 16V Dual VVT Engine	DD7 = 5-Speed Manual T355 Transmission DEF = 6-Speed Manual Aisin BG6 Trans DAV = Continuously Variable Transmission DAW = Cont.Var. w/Off-Rd Crawl Ratio Trans

Hands-Free Kit/Cellular Phone-Blue Tooth
Figure 1-320

ITEM	PART NUMBER	QTY	LINE	SERIES	BODY	ENGINE	TRANS	TRIM	DESCRIPTION
Note: For Warranty Repair On Item 2, Order Using Z Prefix									
1	82207853AE	1							HANDS FREE KIT, Cellular Phone
2	05114359AE	1							MODULE, U Connect
3	05102026AA	1							SPEAKER, Front
4	05102025AA	1							MICROPHONE, Audio
5	05102027AA	1							CONTROLLER, Audio
-6	05191830AA	1							HARNESS

COMPASS/PATRIOT (MK)

SERIES	LINE	BODY	ENGINE	TRANSMISSION
H = HIGHLINE L = LOWLINE P = PREMIUM	J = JEEP - 4WD T = JEEP - 2WD	49 = HATCHBACK TYPE #2 74 = SPORT UTILITY 4-DR TYPE #4	ED3 = 2.4L 4 Cyl DOHC 16V Dual VVT Engine	DD7 = 5-Speed Manual T355 Transmission DEF = 6-Speed Manual Aisin BG6 Trans DAV = Continuously Variable Transmission DAW = Cont.Var. w/Off-Rd Crawl Ratio Trans

Hands-free Kit/Cellular Phone-Blue Tooth-Low Speed
Figure 1-325

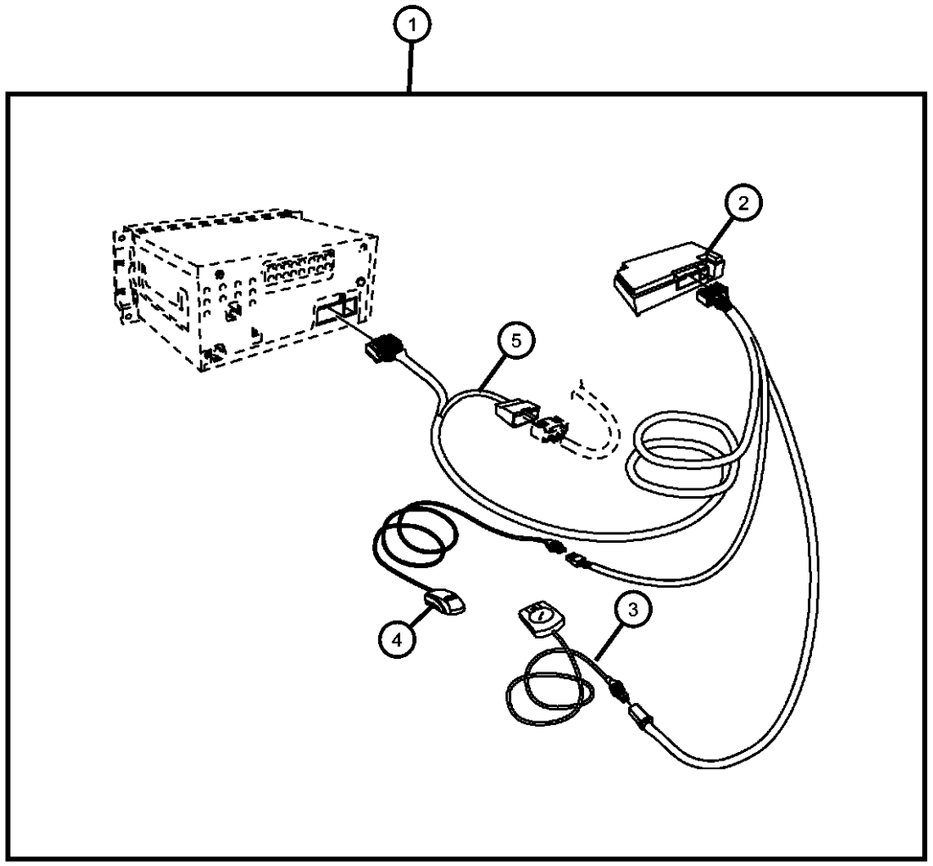

ITEM	PART NUMBER	QTY	LINE	SERIES	BODY	ENGINE	TRANS	TRIM	DESCRIPTION
1	82210081	1							HANDS FREE KIT, Cellular Phone
2	82210081	1							MODULE, (NOT SERVICED)
3	68002645AA	1							CONTROLLER, Audio
4	68002646AA	1							MICROPHONE, Audio
5	68002647AA	1							HARNESS

COMPASS/PATRIOT (MK)

SERIES	LINE	BODY	ENGINE	TRANSMISSION
H = HIGHLINE L = LOWLINE P = PREMIUM	J = JEEP - 4WD T = JEEP - 2WD	49 = HATCHBACK TYPE #2 74 = SPORT UTILITY 4-DR TYPE #4	ED3 = 2.4L 4 Cyl DOHC 16V Dual VVT Engine	DD7 = 5-Speed Manual T355 Transmission DEF = 6-Speed Manual Aisin BG6 Trans DAV = Continuously Variable Transmission DAW = Cont.Var. w/Off-Rd Crawl Ratio Trans

Wheel Kit
Figure 1-405

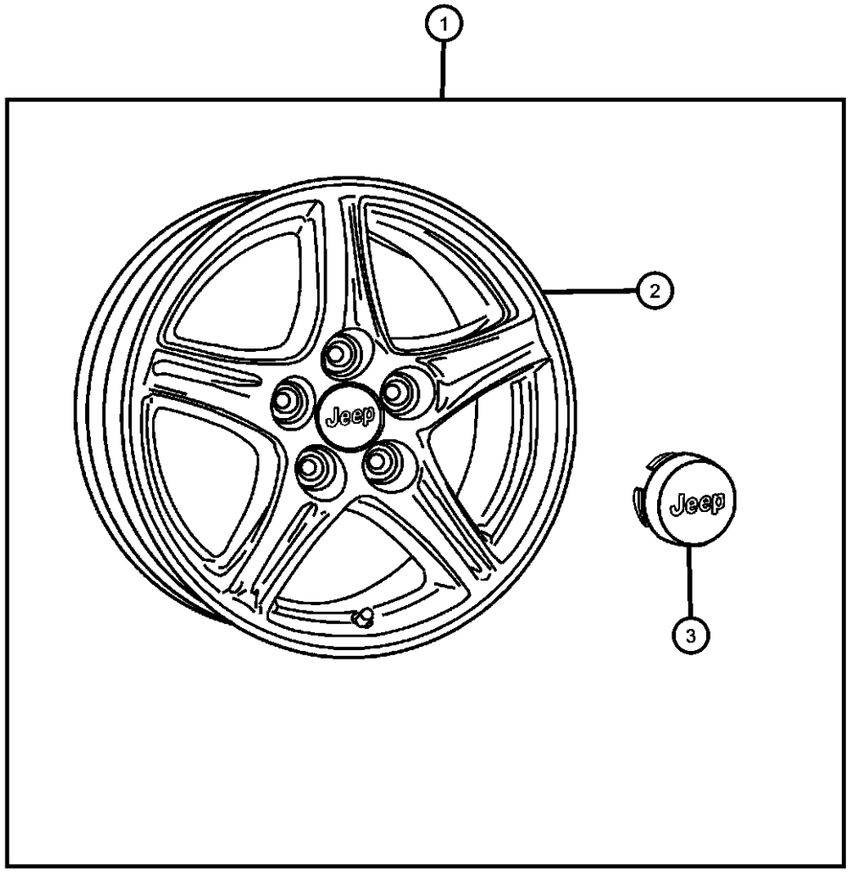

ITEM	PART NUMBER	QTY	LINE	SERIES	BODY	ENGINE	TRANS	TRIM	DESCRIPTION
Note; Item#1, Contains 1 Wheel and 1 Center Cap									
1	82210160	1	J		49				WHEEL KIT, Cast Aluminum
2	82210160	1							WHEEL, (NOT SERVICED)
3	5HT59SZ0AB	4	J, T, U		49, 74				CAP, Wheel Center, [WPP]

COMPASS/PATRIOT (MK)

SERIES	LINE	BODY	ENGINE	TRANSMISSION
H = HIGHLINE L = LOWLINE P = PREMIUM	J = JEEP - 4WD T = JEEP - 2WD	49 = HATCHBACK TYPE #2 74 = SPORT UTILITY 4-DR TYPE #4	ED3 = 2.4L 4 Cyl DOHC 16V Dual VVT Engine	DD7 = 5-Speed Manual T355 Transmission DEF = 6-Speed Manual Aisin BG6 Trans DAV = Continuously Variable Transmission DAW = Cont.Var. w/Off-Rd Crawl Ratio Trans

Wheel Kit
Figure 1-410

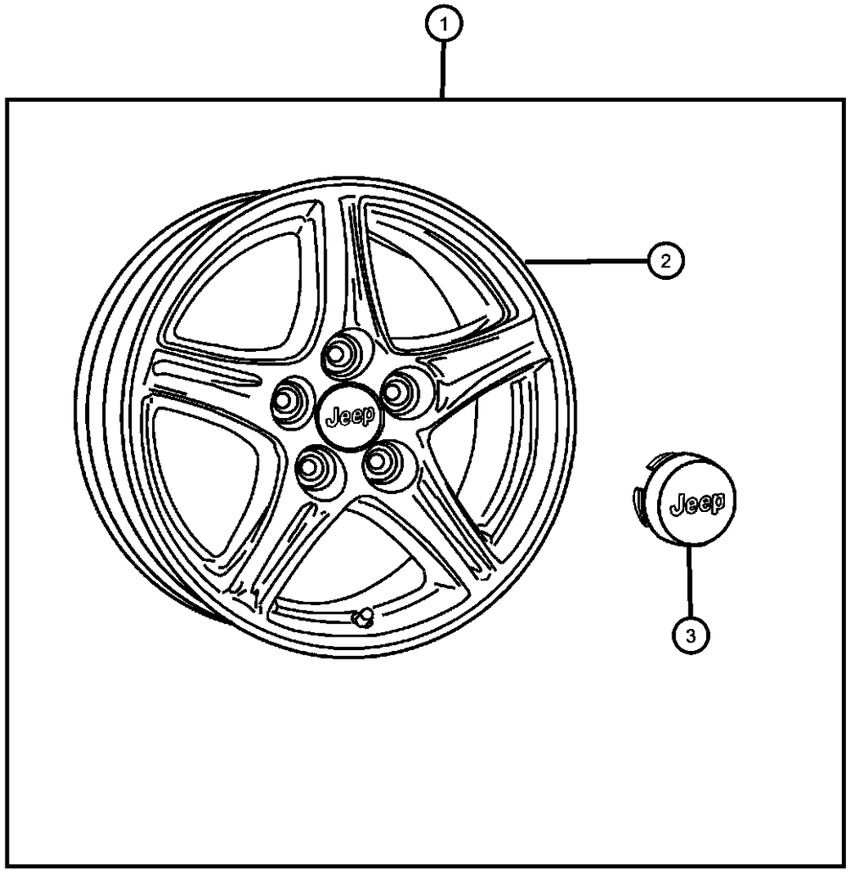

ITEM	PART NUMBER	QTY	LINE	SERIES	BODY	ENGINE	TRANS	TRIM	DESCRIPTION
Note; Item#1, Contains 1 Wheel and 1 Center Cap									
1	82210606	1			49				WHEEL KIT, Cast Aluminum
2	82210606	1							WHEEL, (NOT SERVICED)
3	5HT59SZ0AB	4	J, T, U		49, 74				CAP, Wheel Center

COMPASS/PATRIOT (MK)

SERIES	LINE	BODY	ENGINE	TRANSMISSION
H = HIGHLINE L = LOWLINE P = PREMIUM	J = JEEP - 4WD T = JEEP - 2WD	49 = HATCHBACK TYPE #2 74 = SPORT UTILITY 4-DR TYPE #4	ED3 = 2.4L 4 Cyl DOHC 16V Dual VVT Engine	DD7 = 5-Speed Manual T355 Transmission DEF = 6-Speed Manual Aisin BG6 Trans DAV = Continuously Variable Transmission DAW = Cont.Var. w/Off-Rd Crawl Ratio Trans

Off-Road/Driving Lamp Wiring Kit
Figure 1-605

ITEM	PART NUMBER	QTY	LINE	SERIES	BODY	ENGINE	TRANS	TRIM	DESCRIPTION
1	82210715	1							INSTALLATION PACKAGE, Off Road Light
2	05179785AA	1							HARNESS
3	05179783AA	1							HARNESS, Wiring
4	68005178AA	1							SWITCH, Fog Lamp
5	04778570	1							TUBE, Heat Shrink
6	06015756	1							STRAP, Tie, Quantity of 8

COMPASS/PATRIOT (MK)

SERIES	LINE	BODY	ENGINE	TRANSMISSION
H = HIGHLINE L = LOWLINE P = PREMIUM	J = JEEP - 4WD T = JEEP - 2WD	49 = HATCHBACK TYPE #2 74 = SPORT UTILITY 4-DR TYPE #4	ED3 = 2.4L 4 Cyl DOHC 16V Dual VVT Engine	DD7 = 5-Speed Manual T355 Transmission DEF = 6-Speed Manual Aisin BG6 Trans DAV = Continuously Variable Transmission DAW = Cont.Var. w/Off-Rd Crawl Ratio Trans

AR = use ase required - = Non illustrrated part

Roof Mounted Off-Road Lamp Wiring Kit
Figure 1-610

ITEM	PART NUMBER	QTY	LINE	SERIES	BODY	ENGINE	TRANS	TRIM	DESCRIPTION
1	82210877	1			74				INSTALL PACKAGE, Off Road Light
2	05179784AA	1			74				HARNESS, Roof
3	05179783AA	1							HARNESS, Wiring
4	68005178AA	1							SWITCH, Fog Lamp
5	04778570	1							TUBE, Heat Shrink
6	06015756	1							STRAP, Tie, Quantity of 10

COMPASS/PATRIOT (MK)

SERIES	LINE	BODY	ENGINE	TRANSMISSION
H = HIGHLINE L = LOWLINE P = PREMIUM	J = JEEP - 4WD T = JEEP - 2WD	49 = HATCHBACK TYPE #2 74 = SPORT UTILITY 4-DR TYPE #4	ED3 = 2.4L 4 Cyl DOHC 16V Dual VVT Engine	DD7 = 5-Speed Manual T355 Transmission DEF = 6-Speed Manual Aisin BG6 Trans DAV = Continuously Variable Transmission DAW = Cont.Var. w/Off-Rd Crawl Ratio Trans

AR = use ase required - = Non illustrrated part

Fog Lamp Kit
Figure 1-615

ITEM	PART NUMBER	QTY	LINE	SERIES	BODY	ENGINE	TRANS	TRIM	DESCRIPTION
1	82210435	1			74				LIGHT KIT, Fog
2	05166846AA	1			74				HARNESS, Overlay
3	05191986AA	1			74				HARNESS, Overlay
4	06015756	1			74				STRAP, Tie, Quantity of 4
5	05183947AA	1			74				SWITCH, Multifunction
6	04805857AA	1			74				LAMP, Front Fog
7	06506579AA	1			74				SCREW, Tapping, Quantity of 4

COMPASS/PATRIOT (MK)

SERIES	LINE	BODY	ENGINE	TRANSMISSION
H = HIGHLINE L = LOWLINE P = PREMIUM	J = JEEP - 4WD T = JEEP - 2WD	49 = HATCHBACK TYPE #2 74 = SPORT UTILITY 4-DR TYPE #4	ED3 = 2.4L 4 Cyl DOHC 16V Dual VVT Engine	DD7 = 5-Speed Manual T355 Transmission DEF = 6-Speed Manual Aisin BG6 Trans DAV = Continuously Variable Transmission DAW = Cont.Var. w/Off-Rd Crawl Ratio Trans

AR = use ase required - = Non illustrrated part

Engine Block Heater
Figure 1-620

ITEM	PART NUMBER	QTY	LINE	SERIES	BODY	ENGINE	TRANS	TRIM	DESCRIPTION
1	82210533	1							HEATER KIT, Engine Block
2	05033279AA	1							CORD, Engine Block Heater
3	05033557AB	1							HEATER, Engine

COMPASS/PATRIOT (MK)

SERIES	LINE	BODY	ENGINE	TRANSMISSION
H = HIGHLINE L = LOWLINE P = PREMIUM	J = JEEP - 4WD T = JEEP - 2WD	49 = HATCHBACK TYPE #2 74 = SPORT UTILITY 4-DR TYPE #4	ED3 = 2.4L 4 Cyl DOHC 16V Dual VVT Engine	DD7 = 5-Speed Manual T355 Transmission DEF = 6-Speed Manual Aisin BG6 Trans DAV = Continuously Variable Transmission DAW = Cont.Var. w/Off-Rd Crawl Ratio Trans

Alarm Kit
Figure 1-910

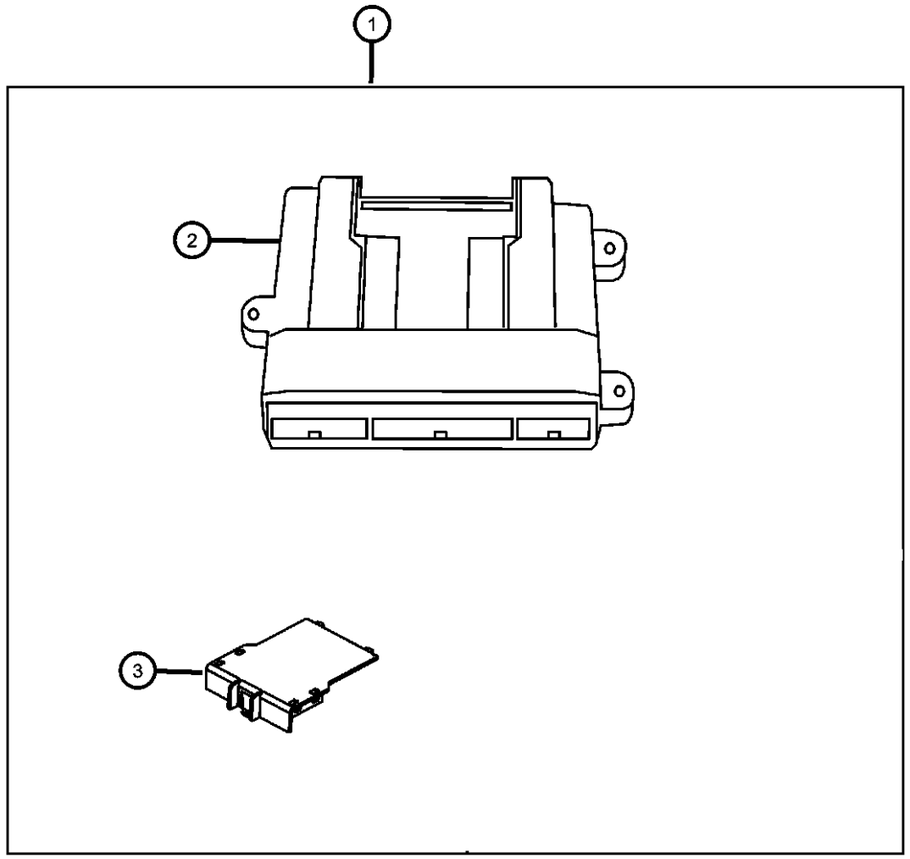

ITEM	PART NUMBER	QTY	LINE	SERIES	BODY	ENGINE	TRANS	TRIM	DESCRIPTION
1									ALARM KIT, Security with Keyless
	82209702AB	1			49				For Vehicles with RKE Electric Locks
	82209703	1			74				
2	05140464AA	1			74				MODULE, Remote Start
3	05189810AA	1			74				MODULE, Security Alarm

COMPASS/PATRIOT (MK)

SERIES	LINE	BODY	ENGINE	TRANSMISSION
H = HIGHLINE L = LOWLINE P = PREMIUM	J = JEEP - 4WD T = JEEP - 2WD	49 = HATCHBACK TYPE #2 74 = SPORT UTILITY 4-DR TYPE #4	ED3 = 2.4L 4 Cyl DOHC 16V Dual VVT Engine	DD7 = 5-Speed Manual T355 Transmission DEF = 6-Speed Manual Aisin BG6 Trans DAV = Continuously Variable Transmission DAW = Cont.Var. w/Off-Rd Crawl Ratio Trans

Engine Oil Cooler
Figure 1-1105

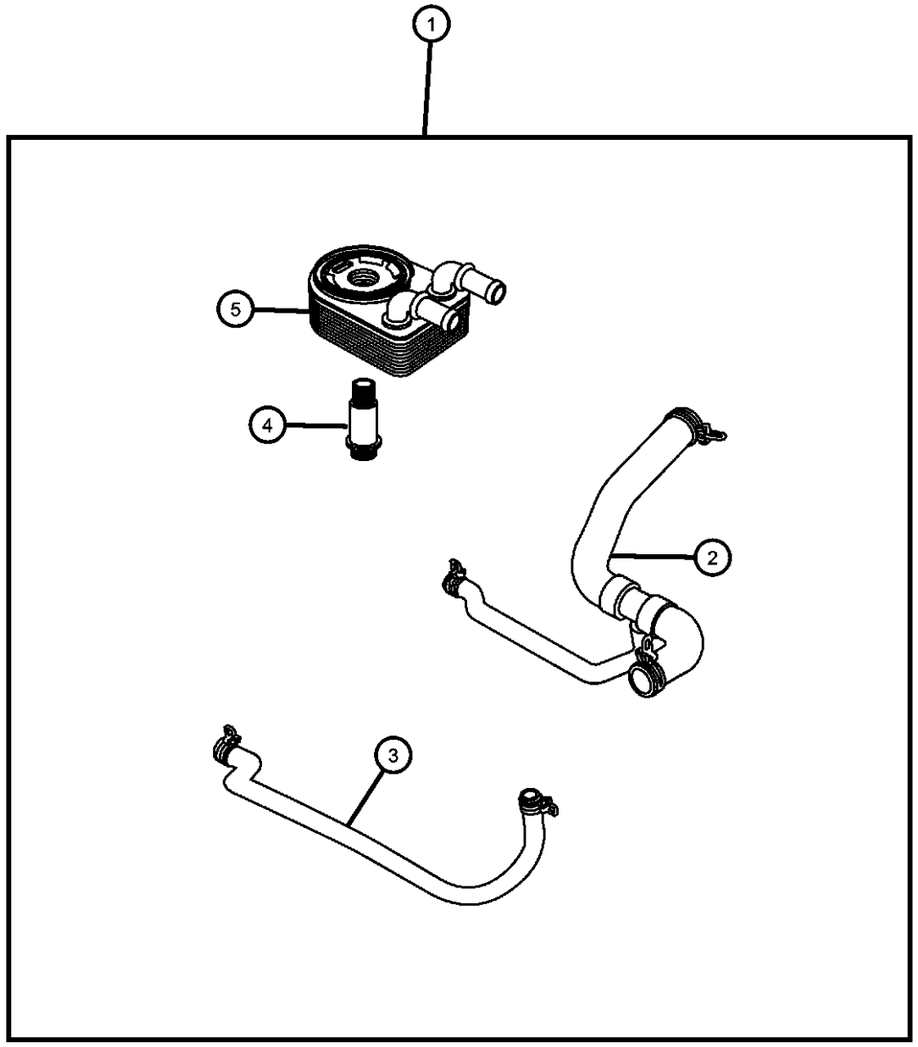

ITEM	PART NUMBER	QTY	LINE	SERIES	BODY	ENGINE	TRANS	TRIM	DESCRIPTION
1	82210700	1							COOLER KIT, Engine Oil
2	05058489AE	1							HOSE, Radiator Outlet
3	05058490AB	1							HOSE, Radiator Outlet
4	04884758AB	1							CONNECTOR, Engine Oil Cooler
5	04884757AD	1							COOLER, Engine Oil

COMPASS/PATRIOT (MK)

SERIES	LINE	BODY	ENGINE	TRANSMISSION
H = HIGHLINE L = LOWLINE P = PREMIUM	J = JEEP - 4WD T = JEEP - 2WD	49 = HATCHBACK TYPE #2 74 = SPORT UTILITY 4-DR TYPE #4	ED3 = 2.4L 4 Cyl DOHC 16V Dual VVT Engine	DD7 = 5-Speed Manual T355 Transmission DEF = 6-Speed Manual Aisin BG6 Trans DAV = Continuously Variable Transmission DAW = Cont.Var. w/Off-Rd Crawl Ratio Trans

Engine Oil Cooler
Figure 1-1110

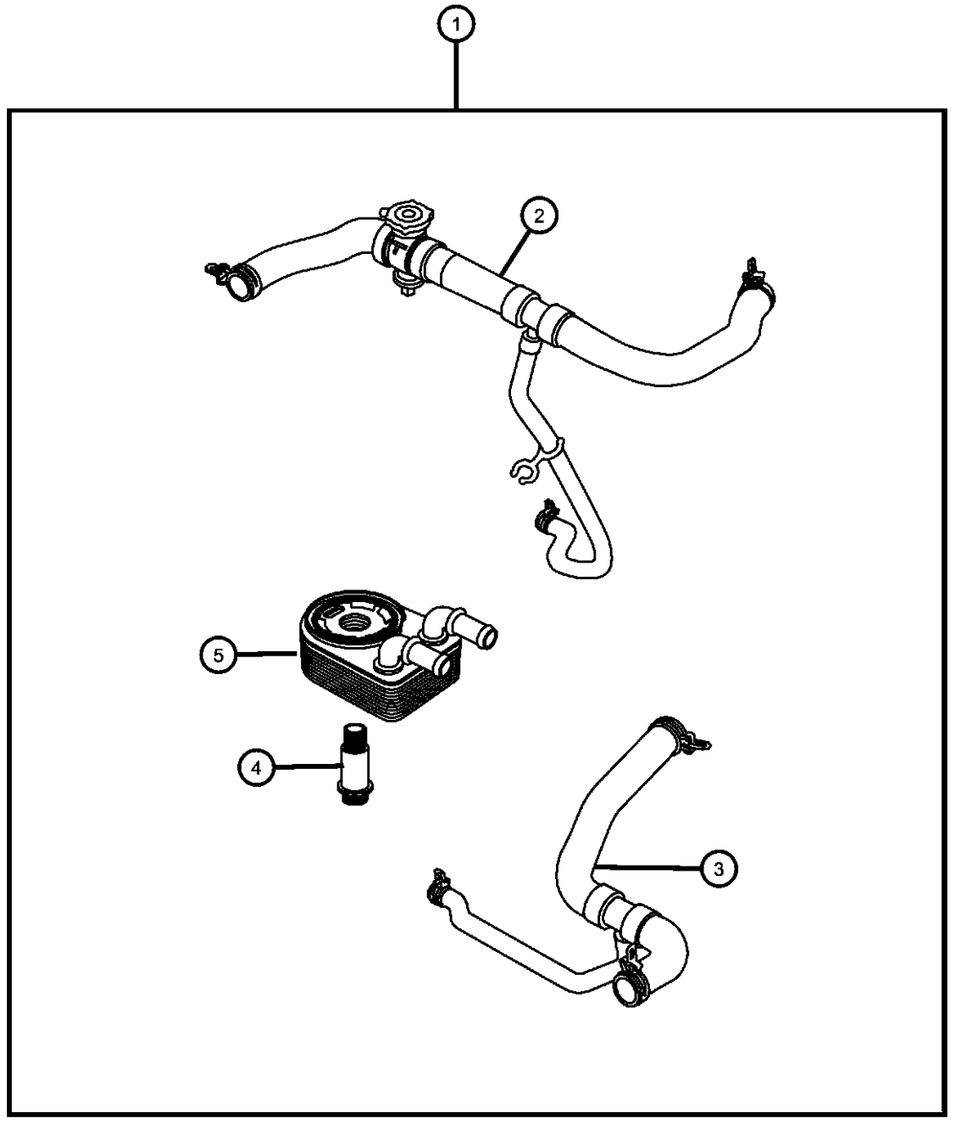

ITEM	PART NUMBER	QTY	LINE	SERIES	BODY	ENGINE	TRANS	TRIM	DESCRIPTION
1	82210701	1							COOLER KIT, Engine Oil
2	05058492AB	1							HOSE, Radiator Inlet
3	05058489AE	1							HOSE, Radiator Outlet
4	04884758AB	1							CONNECTOR, Engine Oil Cooler
5	04884757AD	1							COOLER, Engine Oil

COMPASS/PATRIOT (MK)

SERIES	LINE	BODY	ENGINE	TRANSMISSION
H = HIGHLINE L = LOWLINE P = PREMIUM	J = JEEP - 4WD T = JEEP - 2WD	49 = HATCHBACK TYPE #2 74 = SPORT UTILITY 4-DR TYPE #4	ED3 = 2.4L 4 Cyl DOHC 16V Dual VVT Engine	DD7 = 5-Speed Manual T355 Transmission DEF = 6-Speed Manual Aisin BG6 Trans DAV = Continuously Variable Transmission DAW = Cont.Var. w/Off-Rd Crawl Ratio Trans

Group - 2

Front Suspension & Drive

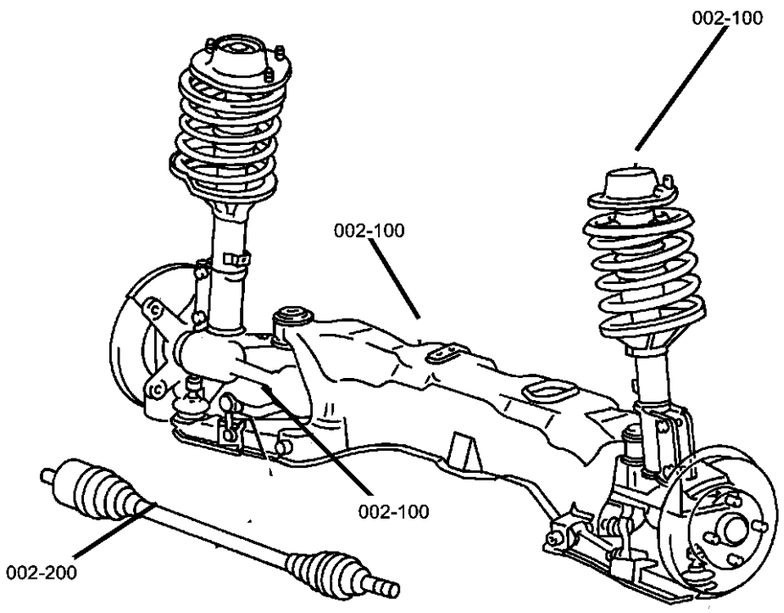

002-100 Front Suspension 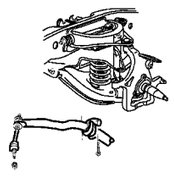	**002-200** Front Axle Drive Shafts 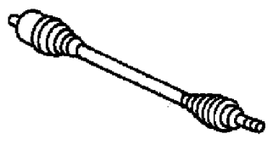		

Group - 2 Front Suspension & Drive

Illustration Title — Group-Fig. No.

Front Suspension
Suspension,Front ..... Fig. 2 - 110

Front Axle Drive Shafts
Axle Shafts,Front ..... Fig. 2 - 210

Suspension,Front
Figure 2-110

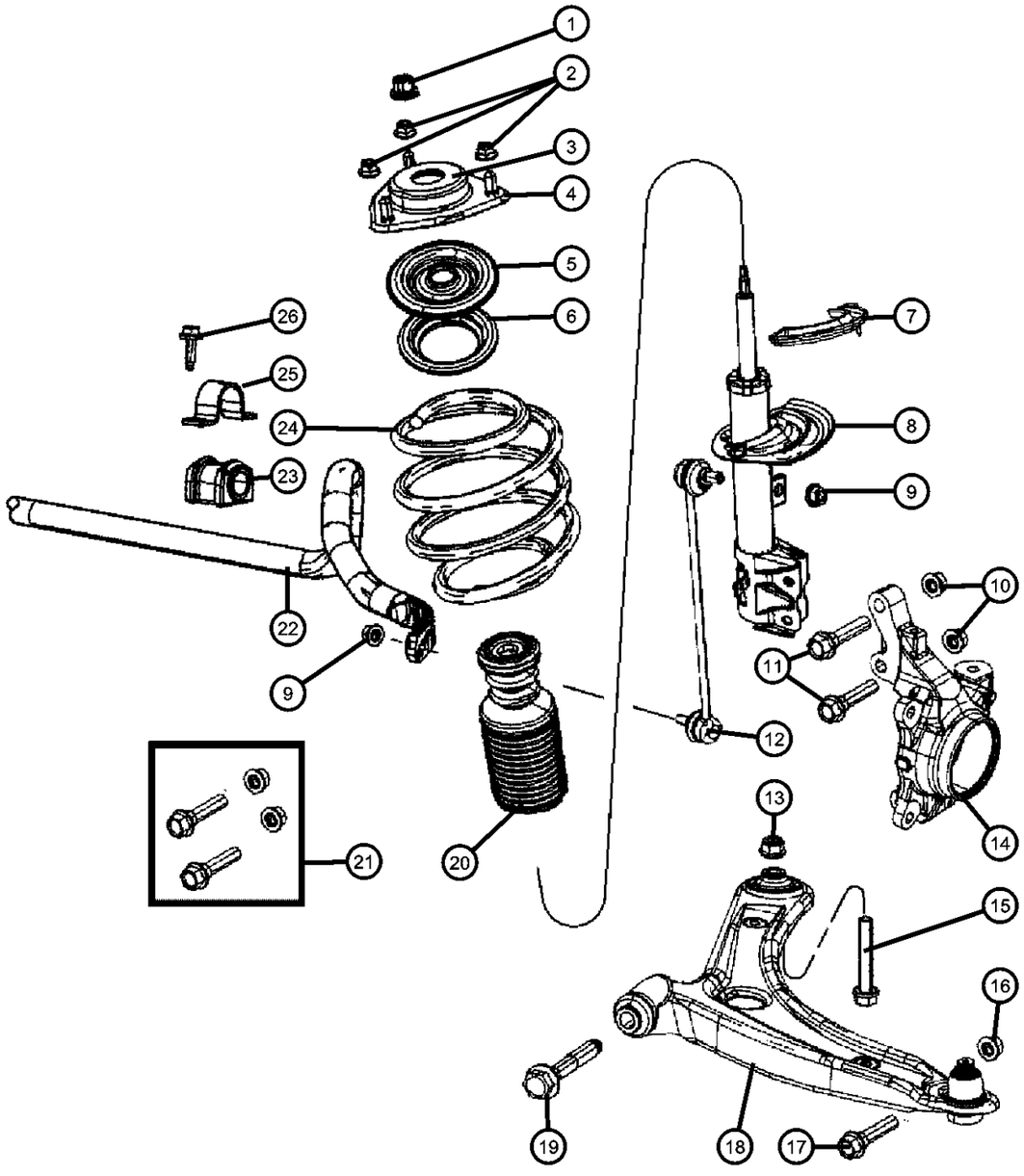

ITEM	PART NUMBER	QTY	LINE	SERIES	BODY	ENGINE	TRANS	TRIM	DESCRIPTION
1	06508273AA	2							NUT AND WASHER, Hex, Strut to Strut Rod, Mounting
2	06503335	6	J, T, U		49, 74				NUT, Hex, M10X1.25, Strut Mount to Body, Mounting
3	05085458AA	2	U, J, T		49, 74				BEARING, Strut Mount, Upper Spring Seat Bearing
4	05085461AB	2	J, T, U		49, 74				MOUNT, StrutUpper
5	05105822AA	2	J, T, U		49, 74				ISOLATOR, SpringUpper
6	05085403AD	2	J, T, U		49, 74				SEAT, SpringUpper
7	05085405AB	2	J, T, U		49, 74				ISOLATOR, SpringLower
8									STRUT, Front Suspension
	05105172AE	1	J, T, U		49, 74				[SDC,SDE], Right
	05105175AF	1	J, T, U		49, 74				[SDF], Left
	05105173AE	1	J, T, U		49, 74				[SDC,SDE], Left
	05105174AF	1	J, T, U		49, 74				[SDF], Right
	05272924AA	1	J, T, U		49				[SDC], Right
		1	J, T, U		74				[SDC], Right
	05272925AA	1	J, T, U		49				[SDC], Left
		1	J, T, U		74				[SDC], Left
9									NUT & WASHER, Hex, M10 X 1.25
	06508961AA	2	J, T, U		49, 74				Link to Front Strut
		2	U, J, T		49, 74				Link to Sway Bar
10	06505232AA	4	J, T, U		49, 74				NUT, Strut to Knuckle, Mounting
11	06508262AA	4	J, T, U		49, 74				BOLT, Strut to Knuckle, Mounting
12	05174185AB	2	J, T, U		49, 74				LINK PACKAGE, Stabilizer Bar, Contains 1-Link and 2-Nuts
13	06104719AA	2	J, T, U		49, 74				NUT, LCA to Rear Crossmember, Mounting
14									KNUCKLE AND HUB, Front
	05085702AI	1	J, T, U		49, 74				[BRF,BR1], Right
	05085703AI	1	J, T, U		49, 74				[BRF,BR1], Left
	05105935AA	1	J, T, U		49, 74				[BRF+AWL], Left
	05105936AA	1	J, T, U		49, 74				[BRF+AWL], Right
15	06104264AA	2							SCREW, Hex Head, LCA to Rear Crossmember, Mounting
16	06104711AA	2	J, T, U		49, 74				NUT, M12, Knuckle to LCA, Mounting

COMPASS/PATRIOT (MK)

SERIES	LINE	BODY	ENGINE	TRANSMISSION
H = HIGHLINE L = LOWLINE P = PREMIUM	J = JEEP - 4WD T = JEEP - 2WD	49 = HATCHBACK TYPE #2 74 = SPORT UTILITY 4-DR TYPE #4	ED3 = 2.4L 4 Cyl DOHC 16V Dual VVT Engine	DD7 = 5-Speed Manual T355 Transmission DEF = 6-Speed Manual Aisin BG6 Trans DAV = Continuously Variable Transmission DAW = Cont.Var. w/Off-Rd Crawl Ratio Trans

AR = use ase required - = Non illustrrated part

Suspension,Front
Figure 2-110

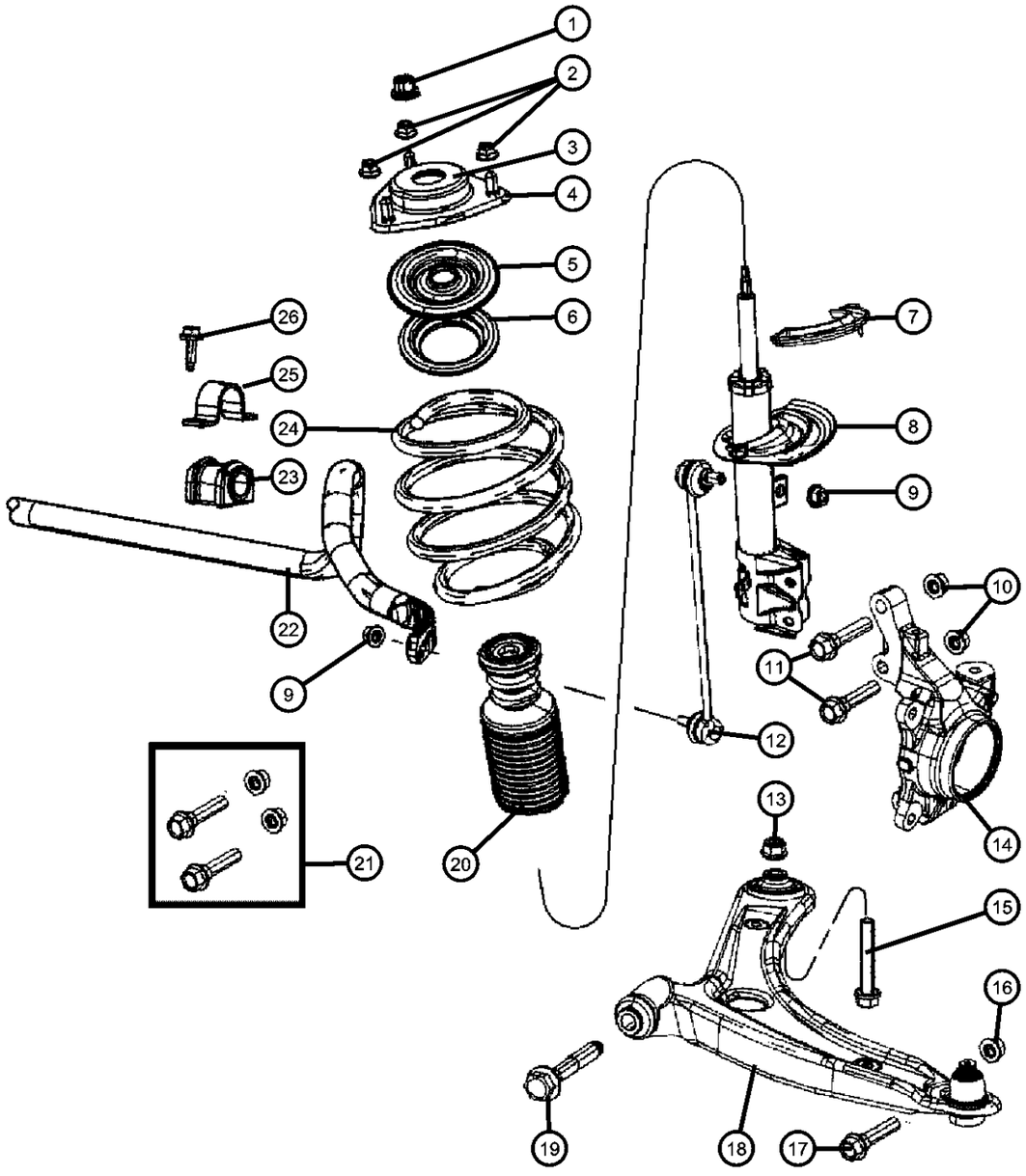

ITEM	PART NUMBER	QTY	LINE	SERIES	BODY	ENGINE	TRANS	TRIM	DESCRIPTION
17	06104240AA	2	J, T, U		49, 74				BOLT, Hex Flange Head, Knuckle to LCA, Mounting
18									ARM, Lower Control, Front
	05105040AB	1	J, T, U		49, 74				Right
	05105041AB	1	J, T, U		49, 74				Left
19	06508844AA	4	J, T, U		49, 74				BOLT, Hex Head, LCA to Crossmember, Mounting
20	05105543AC	2	J, T, U		49, 74				BUMPER, Jounce, Dust Shield
21	05019074AA	4							BOLT PACKAGE, Camber Adjustment
22	05105101AA	1	J, T, U		49, 74				BAR, Front Sway
23	05105103AC	2	J, T, U		49, 74				CUSHION, Sway Eliminator
24									SPRING, Front Coil
	05105861AC	1	J, T, U		49				[ZFA,ZUA]
		1	J, T, U		74				[ZFA,ZUA]
	05105862AC	1	J, T, U		49				[ZFB,ZUB]
		1	J, T, U		74				[ZFB,ZUB]
	05105863AC	1	J, T, U		49				[ZFC,ZUC]
		1	J, T, U		74				[ZFC,ZUC]
	05105864AC	1	J, T, U		49				[ZFD,ZUD]
		1	J, T, U		74				[ZFD,ZUD]
	05105865AC	1	J, T, U		74				[ZFE,ZUE]
	05105866AC	1	J, T, U		49				[ZFF,ZUF]
		1	J, T, U		74				[ZFF,ZUF]
	05105867AC	1	J, T, U		49				[ZFG,ZUG]
		1	J, T, U		74				[ZFG,ZUG]
		1	U, J, T		49				[ZFE,ZUE]
	05105869AC	1	J, T, U		49				[ZFJ,ZUJ]
		1	J, T, U		74				[ZFJ,ZUJ]
	05105971AA	1	J, T, U		49				[ZEA,ZTA]
		1	J, T, U		74				[ZEA,ZTA]
	05105868AC	1	J, T, U		49				[ZFH,ZUH]
		1	J, T, U		74				[ZFH,ZUH]
	05105973AA	1	J, T, U		74				[ZEC,ZTC]

COMPASS/PATRIOT (MK)

SERIES	LINE	BODY	ENGINE	TRANSMISSION
H = HIGHLINE L = LOWLINE P = PREMIUM	J = JEEP - 4WD T = JEEP - 2WD	49 = HATCHBACK TYPE #2 74 = SPORT UTILITY 4-DR TYPE #4	ED3 = 2.4L 4 Cyl DOHC 16V Dual VVT Engine	DD7 = 5-Speed Manual T355 Transmission DEF = 6-Speed Manual Aisin BG6 Trans DAV = Continuously Variable Transmission DAW = Cont.Var. w/Off-Rd Crawl Ratio Trans

Suspension,Front
Figure 2-110

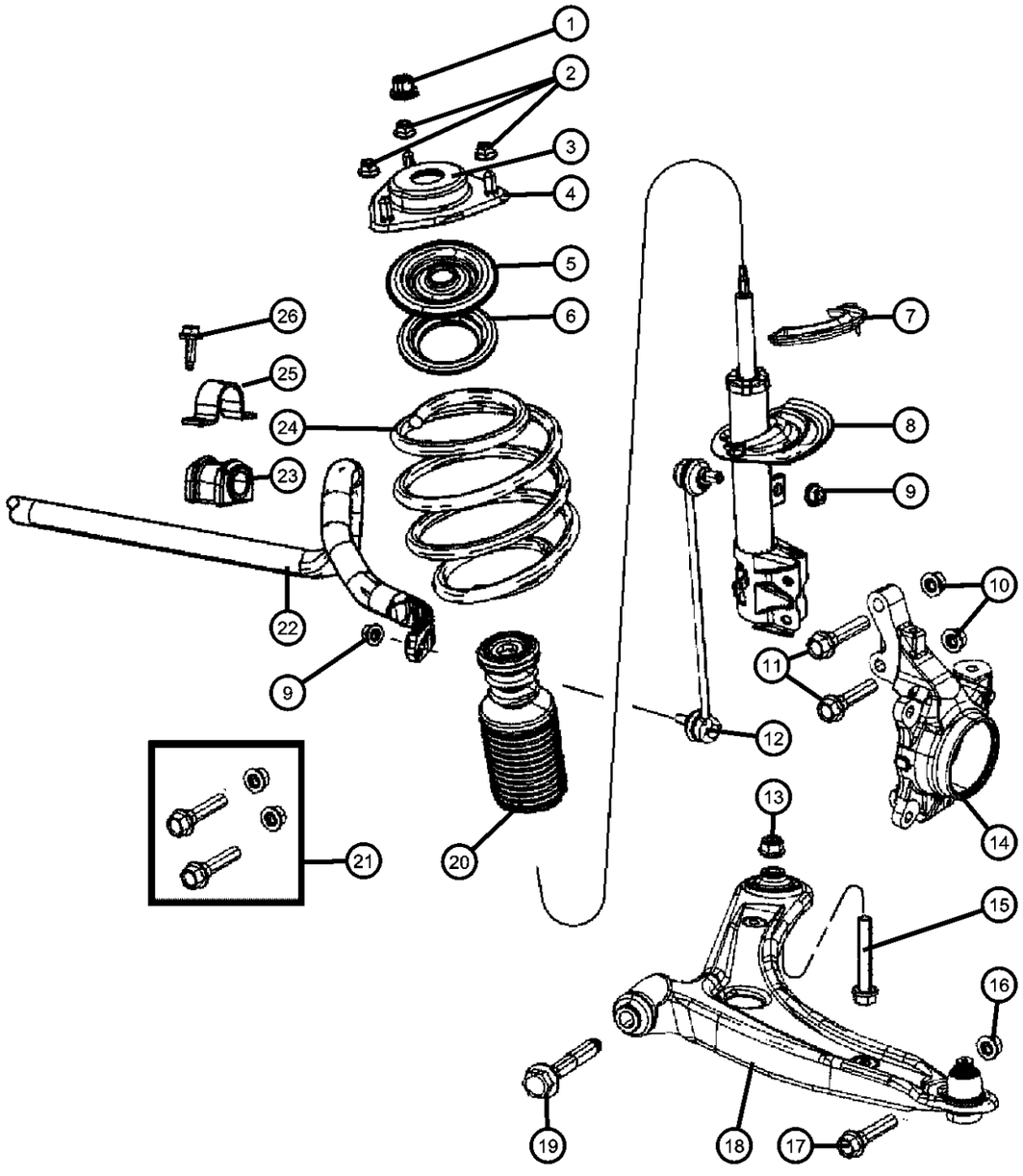

ITEM	PART NUMBER	QTY	LINE	SERIES	BODY	ENGINE	TRANS	TRIM	DESCRIPTION
	05105972AA	1	J, T, U		49				[ZEB,ZTB]
		1	J, T, U		74				[ZEB,ZTB]
		1	J, T, U		49				[ZEC,ZTC]
25	05105566AA	2	J, T, U		49, 74				RETAINER, Stabilizer Bar GrommetMounting
26	06104388AA	4							SCREW, Front Sway Bar to Crossmember, Mounting
-27	06105075AA	1	J, T, U		49, 74				BOLT, Hex Head

COMPASS/PATRIOT (MK)

SERIES	LINE	BODY	ENGINE	TRANSMISSION
H = HIGHLINE L = LOWLINE P = PREMIUM	J = JEEP - 4WD T = JEEP - 2WD	49 = HATCHBACK TYPE #2 74 = SPORT UTILITY 4-DR TYPE #4	ED3 = 2.4L 4 Cyl DOHC 16V Dual VVT Engine	DD7 = 5-Speed Manual T355 Transmission DEF = 6-Speed Manual Aisin BG6 Trans DAV = Continuously Variable Transmission DAW = Cont.Var. w/Off-Rd Crawl Ratio Trans

AR = use ase required - = Non illustrrated part

Axle Shafts,Front
Figure 2-210

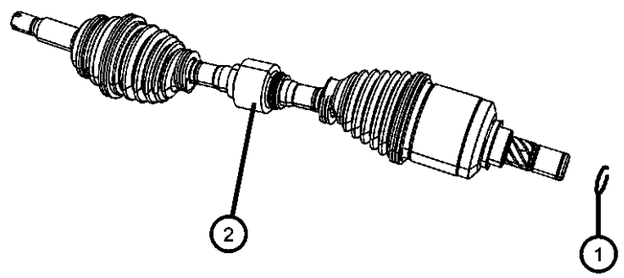

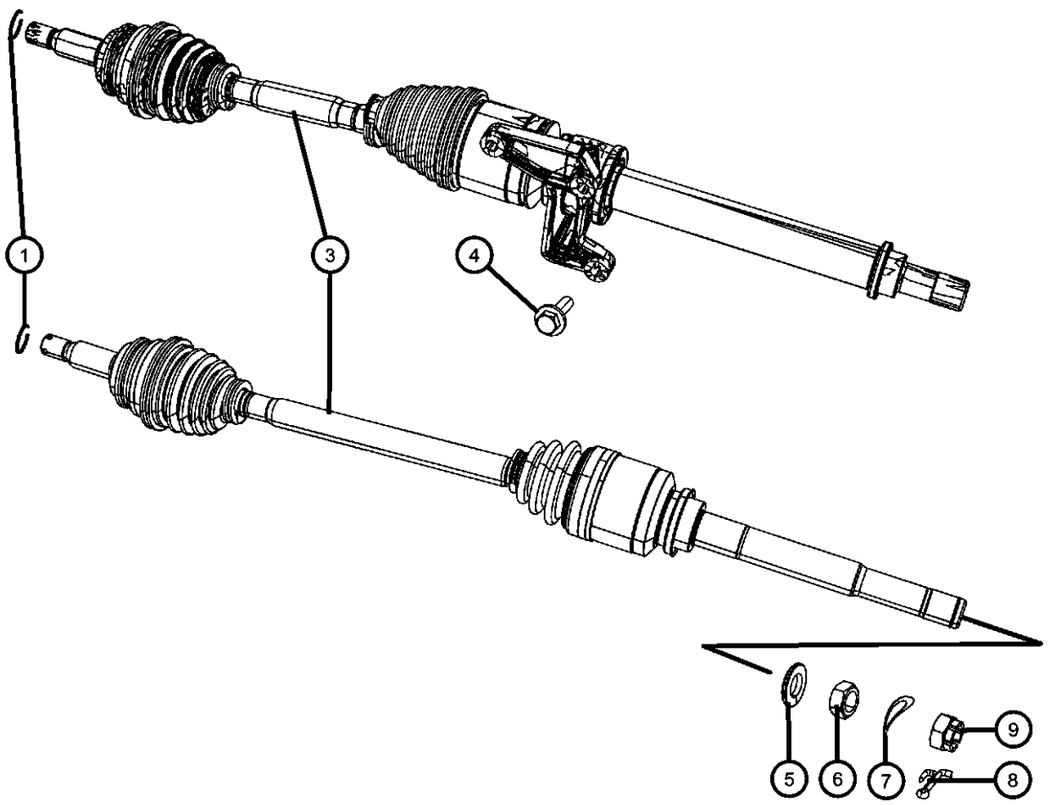

ITEM	PART NUMBER	QTY	LINE	SERIES	BODY	ENGINE	TRANS	TRIM	DESCRIPTION
1									CIRCLIP, Half Shaft
	05189156AA	1	J, T, U		49, 74	ED3	DAW		Right or Left
		1	J, T, U		49, 74	ED3	DAV, DD7		Right or Left
	05189157AA	1	J, T, U		49, 74	ECD			Right or Left
2									SHAFT, Axle Half
	05085220AB	1	J, T, U		49, 74	ED3	DAV, DD7		Left
		1	J, T, U		49, 74	ED3	DAW		Left
	05085224AB	1	J, T, U		49, 74	ECD			Left
3									SHAFT, Axle Half
	05085250AB	1	J, U		49, 74	ECD			Right
	05105649AC	1	T		49, 74	ED3	DD7		Right
	05105658AC	1	T		49, 74	ED3	DAV, DAW		Right
	05273438AD	1	J, U		49, 74	ED3			Right
4	06102210AA	3	T		49, 74	ED3	DAV, DD7		SCREW, Halfshaft Bracket to Engine Block, Mounting
5	06503352	2							WASHER, Flat, M23x38.0x405, Drive Hub to Halfshaft, Mounting
6	06503685	2							NUT, Drive Hub to Halfshaft, Mounting
7	05212684	2							WASHER, Wave, Drive Hub to Halfshaft, Mounting
8	MF472085	2							PIN, Cotter, 4x30, Drive Hub to Halfshaft, Mounting
9	05212525	2							LOCK, Hub Nut, Drive Hub to Halfshaft, Mounting

COMPASS/PATRIOT (MK)

SERIES	LINE	BODY	ENGINE	TRANSMISSION
H = HIGHLINE L = LOWLINE P = PREMIUM	J = JEEP - 4WD T = JEEP - 2WD	49 = HATCHBACK TYPE #2 74 = SPORT UTILITY 4-DR TYPE #4	ED3 = 2.4L 4 Cyl DOHC 16V Dual VVT Engine	DD7 = 5-Speed Manual T355 Transmission DEF = 6-Speed Manual Aisin BG6 Trans DAV = Continuously Variable Transmission DAW = Cont.Var. w/Off-Rd Crawl Ratio Trans

Group - 3

Rear Axle

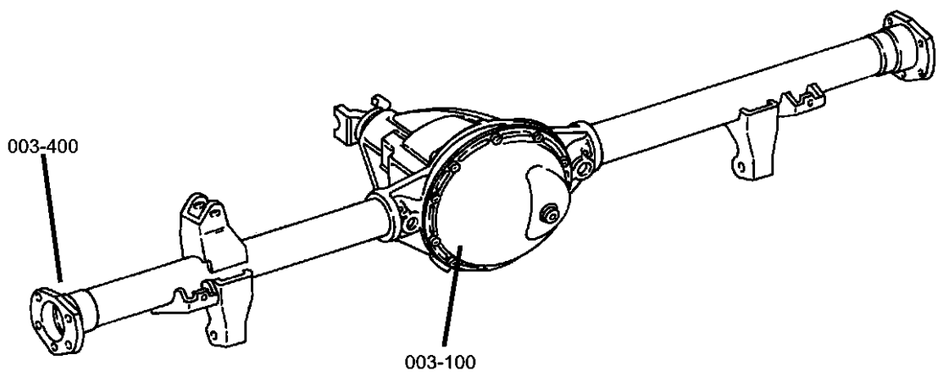

003-100 Rear Axle 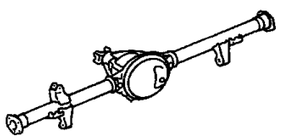	**003-400** Rear Axle Shafts 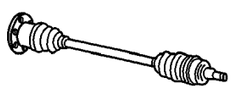		

Group - 3 Rear Axle

Illustration Title — Group-Fig. No.

Rear Axle
Axle Assembly,Rear ..... Fig. 3 - 110
Axle Mounts,Rear ..... Fig. 3 - 120

Rear Axle Shafts
Axle Shafts,Rear ..... Fig. 3 - 410

Axle Assembly,Rear
Figure 3-110

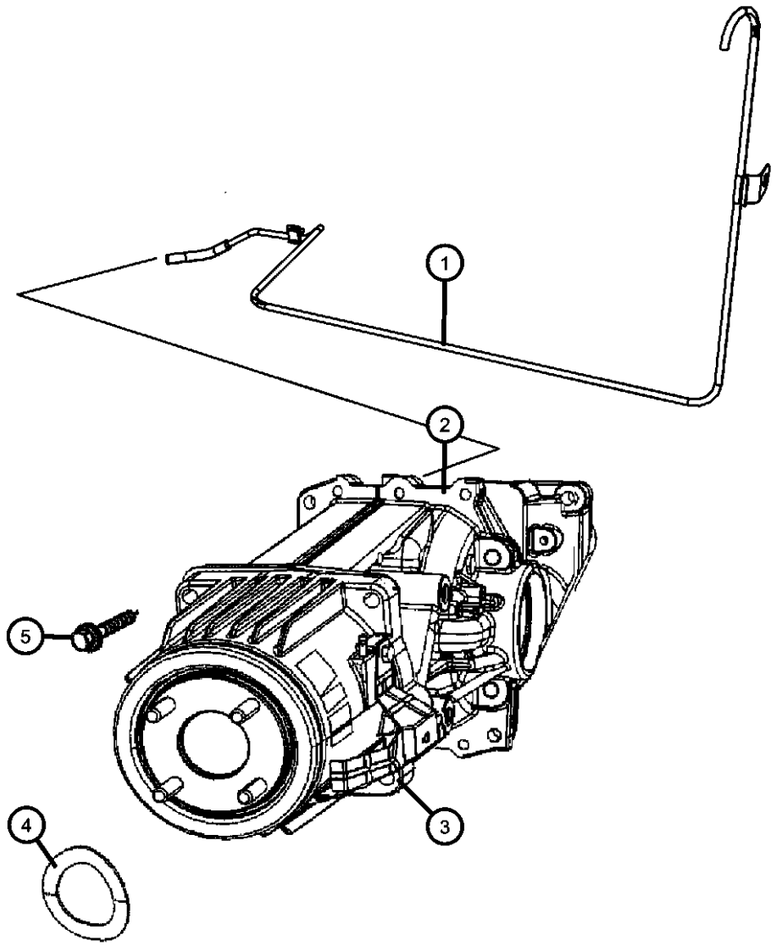

ITEM	PART NUMBER	QTY	LINE	SERIES	BODY	ENGINE	TRANS	TRIM	DESCRIPTION
1	05273394AB	1	J, U		74				VENT ASSY, Rear diff
2									DIFFERENTIAL, Rear Axle
	3501A115	1	J, U		49, 74				[DAV,DD7]
		1	J, U		49, 74				[DEF]
	3501A058	1	J		74				[DAW]
3									COUPLING, Electric Clutch
	05157017AA	1	J, U		49, 74				[DAW]
	3570A007	1	J, U		49, 74				[DEF]
		1	J, U		49, 74				[DAV,DD7]
4	05105681AA	1							WASHER, Differential, Electric Clutch Coupling to Differential, Mounting
5	06508246AA	4							BOLT, Electric Clutch Coupling to Differential, Mounting
-6	05157021AA	1	J, U		74				CLIP, Vent Tube

COMPASS/PATRIOT (MK)

SERIES	LINE	BODY	ENGINE	TRANSMISSION
H = HIGHLINE	J = JEEP - 4WD	49 = HATCHBACK TYPE #2	ED3 = 2.4L 4 Cyl DOHC 16V Dual VVT Engine	DD7 = 5-Speed Manual T355 Transmission
L = LOWLINE	T = JEEP - 2WD	74 = SPORT UTILITY 4-DR TYPE #4		DEF = 6-Speed Manual Aisin BG6 Trans
P = PREMIUM				DAV = Continuously Variable Transmission
				DAW = Cont.Var. w/Off-Rd Crawl Ratio Trans

Axle Mounts,Rear
Figure 3-120

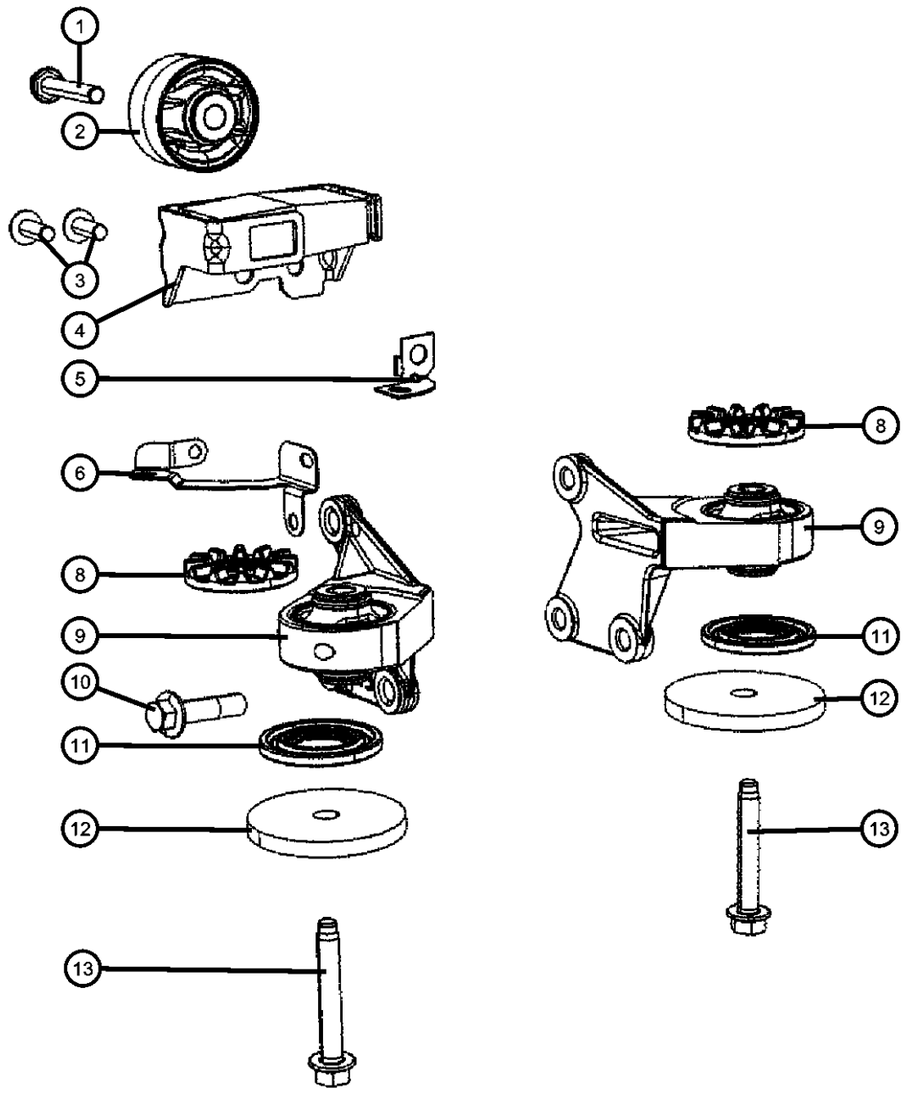

ITEM	PART NUMBER	QTY	LINE	SERIES	BODY	ENGINE	TRANS	TRIM	DESCRIPTION
1	06104265AA	1	J, U		49, 74				SCREW, Rear Differential Isolator, Mounting
2	05105309AA	1	J, U		49, 74				ISOLATOR, Rear Differential-Mounting
3	06508185AA	2							BOLT, Damper to RDA, Mounting
4	05273464AA	1	J, U		49, 74				DAMPER, Axle
5	05273453AA	1	J, U		49, 74				BRACKET, Wiring
6	05105670AA	1	J, U		49, 74				BRACKET, Wiring
-7	05073824AA	2	J, U		49, 74				SCREW, Wiring Bracket, Mounting
8	05105529AA	2	J, U		49, 74				ISOLATOR, Rear DifferentialUpper
9									ISOLATOR AND BRACKET, Rear Differential
	05273442AA	1	J, U		49, 74				Front Right
	05273443AA	1	J, U		49, 74				Front Left
10									BOLT, Hex Head
	06508986AA	6	J, U		49				
		6	J, U		74				
11	05273448AA	2	J, U		49, 74				CUSHION, DifferentialUpper
12	05105833AB	2	J, U		49, 74				CUSHION, Differential, Weight, Lower
13	06105085AA	2	J, U		49, 74				BOLT, RDA Front Mount to Front Crossmember, Mounting

COMPASS/PATRIOT (MK)

SERIES	LINE	BODY	ENGINE	TRANSMISSION
H = HIGHLINE L = LOWLINE P = PREMIUM	J = JEEP - 4WD T = JEEP - 2WD	49 = HATCHBACK TYPE #2 74 = SPORT UTILITY 4-DR TYPE #4	ED3 = 2.4L 4 Cyl DOHC 16V Dual VVT Engine	DD7 = 5-Speed Manual T355 Transmission DEF = 6-Speed Manual Aisin BG6 Trans DAV = Continuously Variable Transmission DAW = Cont.Var. w/Off-Rd Crawl Ratio Trans

AR = use ase required - = Non illustrrated part

Axle Shafts,Rear
Figure 3-410

ITEM	PART NUMBER	QTY	LINE	SERIES	BODY	ENGINE	TRANS	TRIM	DESCRIPTION
1	05189155AA	1	J, U		49, 74				CIRCLIP, Half ShaftRight or Left
2									SHAFT, Axle Half
	05085240AB	1	J, U		49, 74				Right
	05085141AB	1	J, U		49, 74				Left
3	MB109025	2							WASHER, Lock, M22.4, Drive Hub to Halfshaft, Mounting
4	MF472085	2	J, U		49, 74				PIN, Cotter, 4x30, Drive Hub to Halfshaft, Mounting
5	3885A009	2							NUT, Hex Lock, Drive Hub to Halfshaft, Mounting

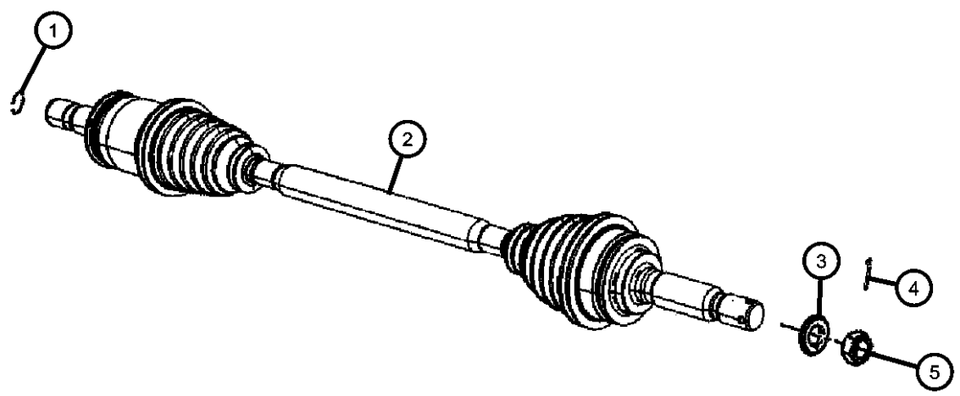

COMPASS/PATRIOT (MK)

SERIES	LINE	BODY	ENGINE	TRANSMISSION
H = HIGHLINE L = LOWLINE P = PREMIUM	J = JEEP - 4WD T = JEEP - 2WD	49 = HATCHBACK TYPE #2 74 = SPORT UTILITY 4-DR TYPE #4	ED3 = 2.4L 4 Cyl DOHC 16V Dual VVT Engine	DD7 = 5-Speed Manual T355 Transmission DEF = 6-Speed Manual Aisin BG6 Trans DAV = Continuously Variable Transmission DAW = Cont.Var. w/Off-Rd Crawl Ratio Trans

Group - 4

Parking Brake

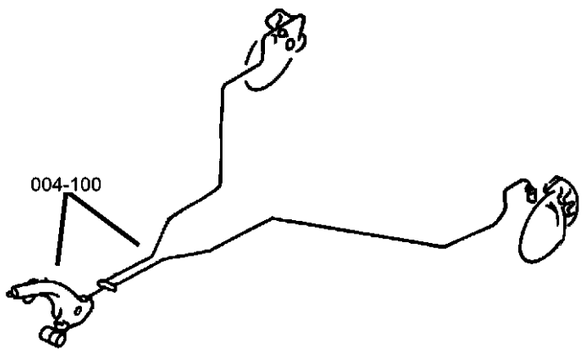

004-100 Parking Brake Lever and Cables 			

Group - 4 Parking Brake

Illustration Title — Group-Fig. No.

Parking Brake Lever and Cables

Parking Brake Lever and Cables..... Fig. 4 - 110
Parking Brake Assembly,Rear,Disc..... Fig. 4 - 120

Parking Brake Lever and Cables
Figure 4-110

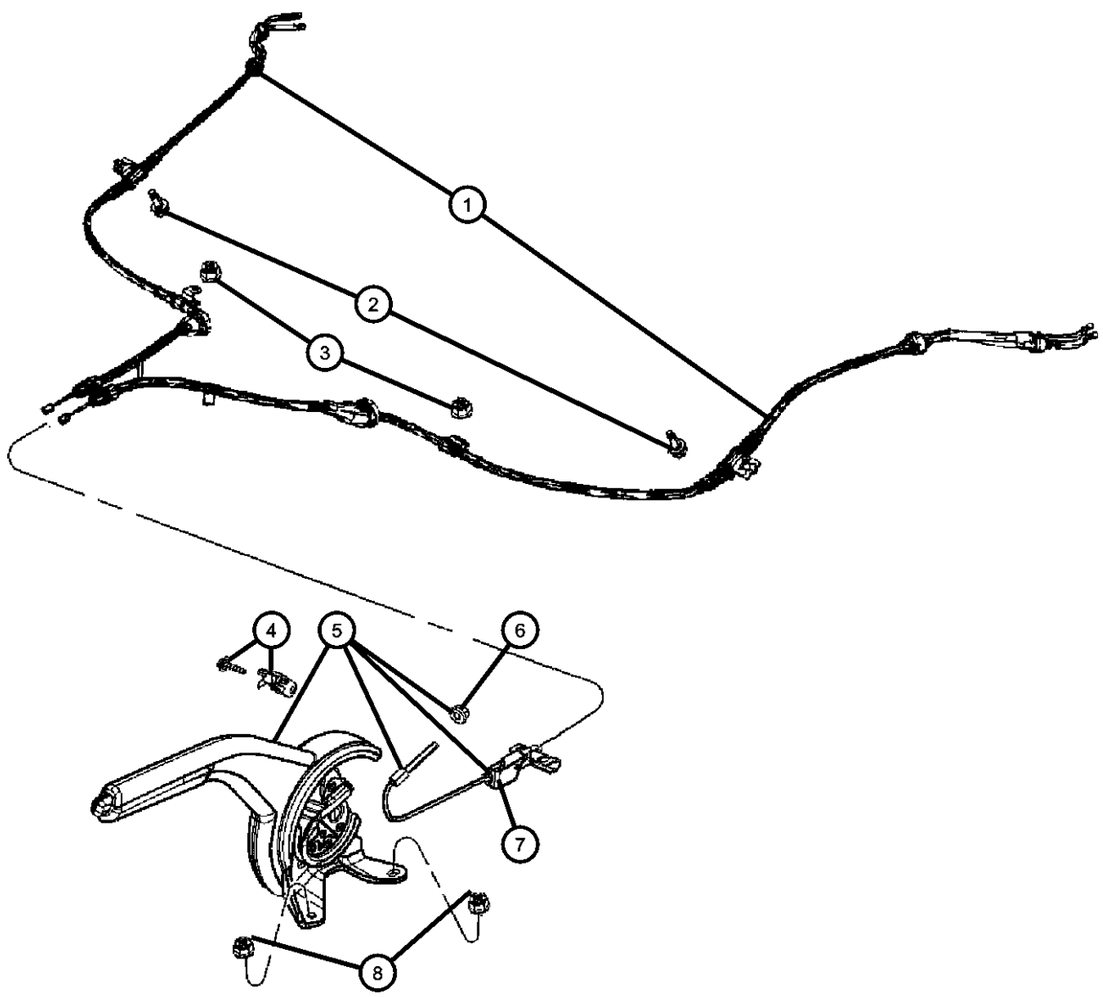

ITEM	PART NUMBER	QTY	LINE	SERIES	BODY	ENGINE	TRANS	TRIM	DESCRIPTION
1									CABLE, Parking Brake
	05105140AC	1	J, T, U		49				Without [AWL], Right
		1	J, T, U		74				Without [AWL], Right
	05105141AC	1	J, T, U		49, 74				Left
	68033142AA	1	J, T, U		49				With [AWL], Right
		1	J, T, U		74				With [AWL], Right
2	06105048AA	2	J, T, U		49, 74				SCREW, Parking Brake Cable to Rear Side Member, Mounting
3	06104716AA	2	J, T, U		49, 74				NUT, Parking Brake Cable to Fuel Tank Strap, Mounting
4	05209922	1	J, T, U		49, 74				SWITCH, Parking Brake
5	1CR75DX9AC	1	J, T, U		49, 74				LEVER, Park Brake
6	05127449AA	1	J, T, U		49, 74				NUT, M6x1.00, Rod to Lever Assembly, Mounting
7	05105913AA	1	J, T, U		49, 74				EQUALIZER, Parking Brake Cable
8	06104716AA	2	J, T, U		49, 74				NUT, Parking Brake Lever Assembly to Floor

COMPASS/PATRIOT (MK)

SERIES	LINE	BODY	ENGINE	TRANSMISSION
H = HIGHLINE L = LOWLINE P = PREMIUM	J = JEEP - 4WD T = JEEP - 2WD	49 = HATCHBACK TYPE #2 74 = SPORT UTILITY 4-DR TYPE #4	ED3 = 2.4L 4 Cyl DOHC 16V Dual VVT Engine	DD7 = 5-Speed Manual T355 Transmission DEF = 6-Speed Manual Aisin BG6 Trans DAV = Continuously Variable Transmission DAW = Cont.Var. w/Off-Rd Crawl Ratio Trans

AR = use ase required - = Non illustrrated part

Parking Brake Assembly,Rear,Disc
Figure 4-120

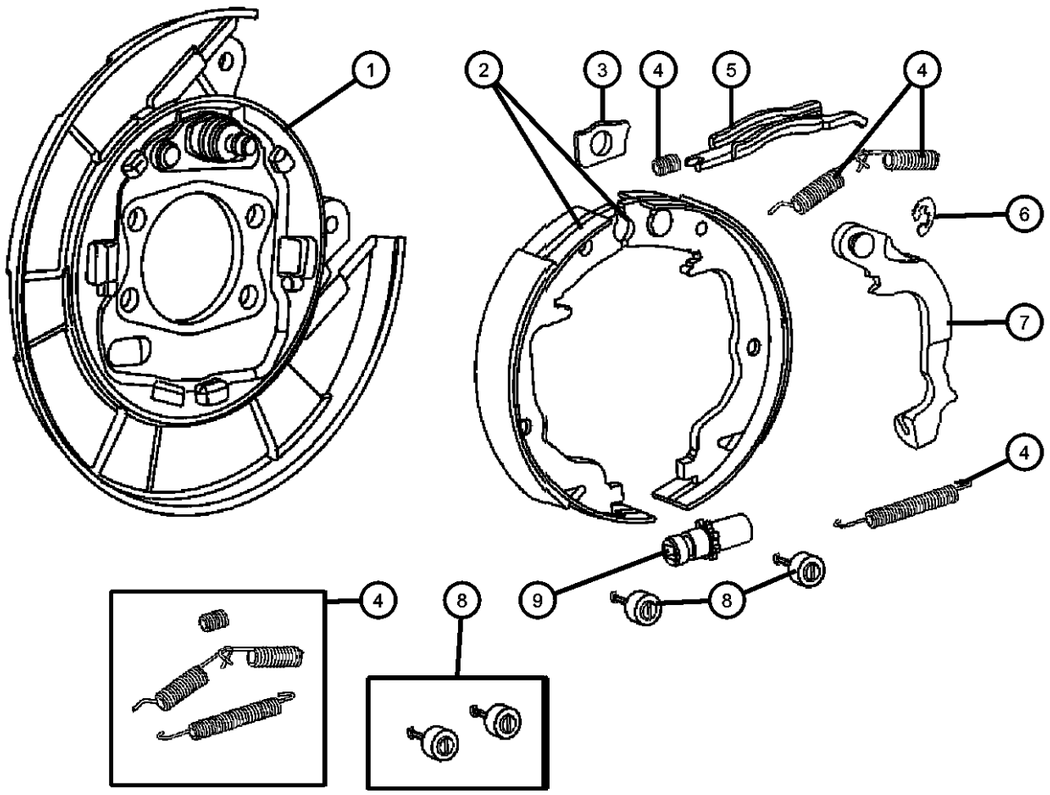

ITEM	PART NUMBER	QTY	LINE	SERIES	BODY	ENGINE	TRANS	TRIM	DESCRIPTION
1									BACKING PLATE ASSY, RR Park Brake
	05191219AA	1	J, T, U		49, 74				Left
	05191220AA	1	J, T, U		49, 74				Right
2	05191215AA	1	J, T, U		49, 74				SHOE AND LINING, Parking Brake, Contains 4 Shoes, Right & Left
3	05191273AA	1	J, T, U		49, 74				GUIDERight or Left
4	05191308AA	1	J, T, U		49, 74				SPRING KIT, Brake Shoe ReturnRight or Left
5									STRUT, Parking Brake
	05191260AA	1	J, T, U		49, 74				Right
	05191259AA	1	J, T, U		49, 74				Left
6	05191313AA	1	J, T, U		49, 74				RETAINER, Parking Brake LeverRight or Left
7									LEVER, Park Brake
	05191223AA	1	J, T, U		49, 74				Left
	05191258AA	1	J, T, U		49, 74				Right
8	05191248AA	1	J, T, U		49, 74				PIN, Brake Shoe Hold DownRight or Left
9	05191218AA	1	J, T, U		49, 74				ADJUSTER, Brake ShoeRight or Left

COMPASS/PATRIOT (MK)

SERIES	LINE	BODY	ENGINE	TRANSMISSION
H = HIGHLINE L = LOWLINE P = PREMIUM	J = JEEP - 4WD T = JEEP - 2WD	49 = HATCHBACK TYPE #2 74 = SPORT UTILITY 4-DR TYPE #4	ED3 = 2.4L 4 Cyl DOHC 16V Dual VVT Engine	DD7 = 5-Speed Manual T355 Transmission DEF = 6-Speed Manual Aisin BG6 Trans DAV = Continuously Variable Transmission DAW = Cont.Var. w/Off-Rd Crawl Ratio Trans

Group - 5

Service Brakes

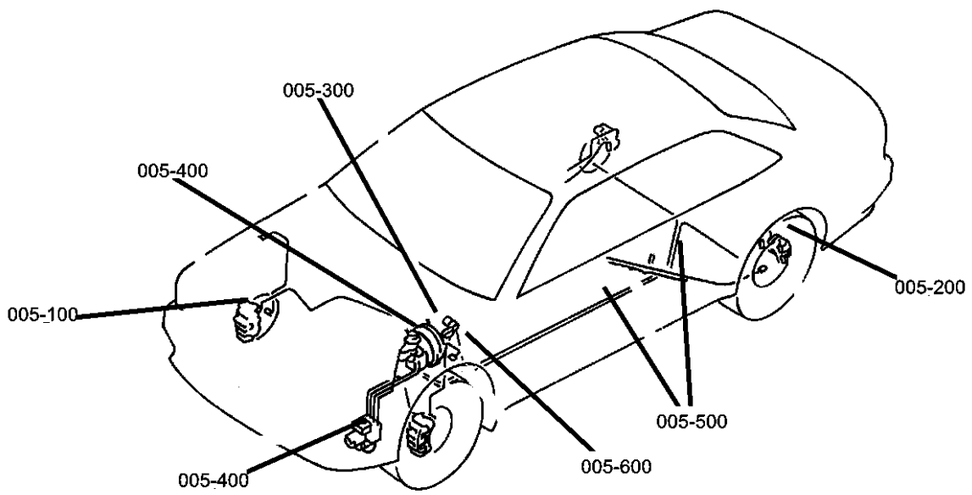

005-100 Front Brakes 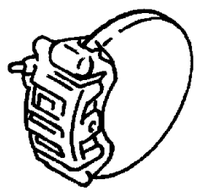	**005-200** Rear Brakes 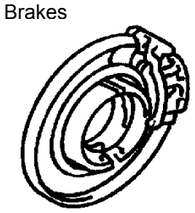	**005-300** Power Brake Booster 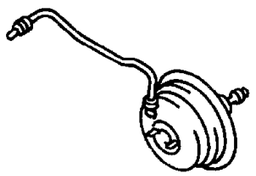	**005-400** Brake Master Cylinder 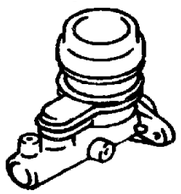
005-500 Brake Lines and Hoses 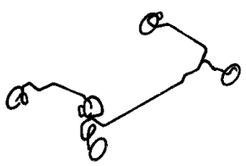	**005-600** Brake Pedals 		

Group - 5 Service Brakes

Illustration Title — Group-Fig. No.

Front Brakes
Brakes, Front ..... Fig. 5 - 110

Rear Brakes
Brakes,Rear,Disc ..... Fig. 5 - 210

Power Brake Booster
Booster,Power Brake ..... Fig. 5 - 310

Brake Master Cylinder
Master Cylinder,Brake ..... Fig. 5 - 410

Brake Lines and Hoses
Brake Lines and Hoses,Front ..... Fig. 5 - 510
Brake Lines and Hoses,Rear ..... Fig. 5 - 520

Brake Pedals
Pedals,Brake ..... Fig. 5 - 610

Brakes, Front
Figure 5-110

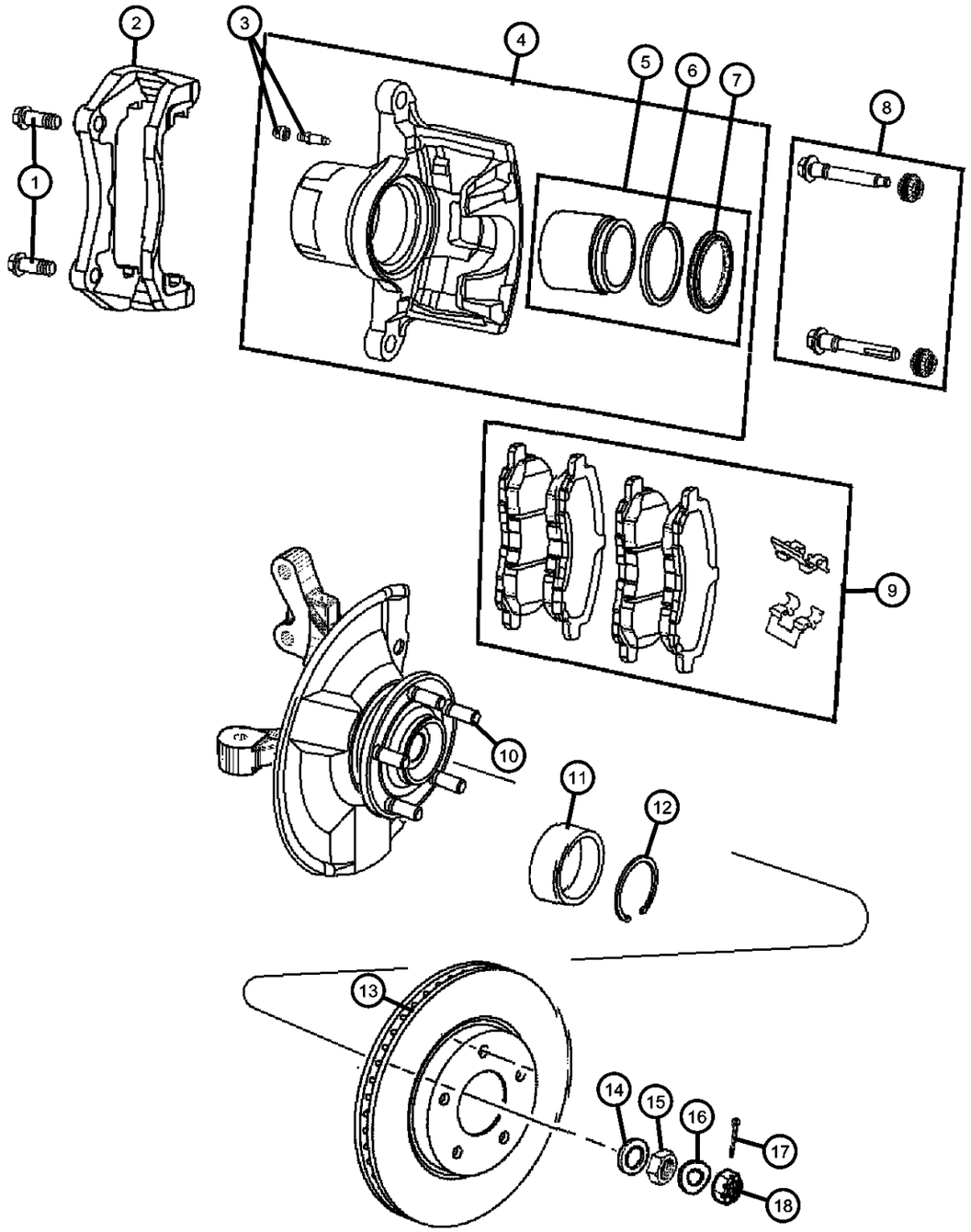

ITEM	PART NUMBER	QTY	LINE	SERIES	BODY	ENGINE	TRANS	TRIM	DESCRIPTION
1	06104233AA	4	J, T, U		49, 74				BOLT, Hex Head, Caliper Adapter to Knuckle, Mounting
2	05191228AA	1	J, T, U		49, 74				ADAPTER, Disc Brake CaliperRight or Left
3	05191242AA	1	J, T, U		49, 74				BLEEDER SCREW, BrakeRight or Left
4									CALIPER, Disc Brake
	05191238AA	1	J, T, U		49, 74				Right
	05191239AA	1	J, T, U		49, 74				Left
5	05191212AA	1	J, T, U		49, 74				PISTON KIT, Front BrakeRight or Left
6	05191241AA	1	J, T, U		49, 74				SEAL KIT, CaliperRight or Left
7	05191240AA	1	J, T, U		49, 74				BOOT KIT, Disc brakeRight or Left
8	05191272AA	1	J, T, U		49, 74				PIN, CaliperRight or Left
9									PAD KIT, Front Disc Brake
	05191217AA	1	J, T, U		49, 74				[BR1]
	05191229AA	1	J, T, U		49, 74				[BRF]
10	MU159002	5	J, T, U		49, 74				BOLT, HubRight or Left
11	05105586AA	1	J, T, U		49, 74				BEARING, WheelRight or Left
12	MB303868	1	J, T, U		49, 74				SNAP RING, Wheel HubRight or Left
13	05105514AA	2	J, T, U		49, 74				ROTOR, Brake
14	06503352	2	J, T, U		49, 74				WASHER, Flat, M23x38.0x405
15	06503685	2							NUT
16	05212684	2							WASHER, Wave
17	MF472085	2							PIN, Cotter, 4x30
18	05212525	2							LOCK, Hub Nut

COMPASS/PATRIOT (MK)

SERIES	LINE	BODY	ENGINE	TRANSMISSION
H = HIGHLINE L = LOWLINE P = PREMIUM	J = JEEP - 4WD T = JEEP - 2WD	49 = HATCHBACK TYPE #2 74 = SPORT UTILITY 4-DR TYPE #4	ED3 = 2.4L 4 Cyl DOHC 16V Dual VVT Engine	DD7 = 5-Speed Manual T355 Transmission DEF = 6-Speed Manual Aisin BG6 Trans DAV = Continuously Variable Transmission DAW = Cont.Var. w/Off-Rd Crawl Ratio Trans

AR = use ase required - = Non illustrrated part

Brakes,Rear,Disc
Figure 5-210

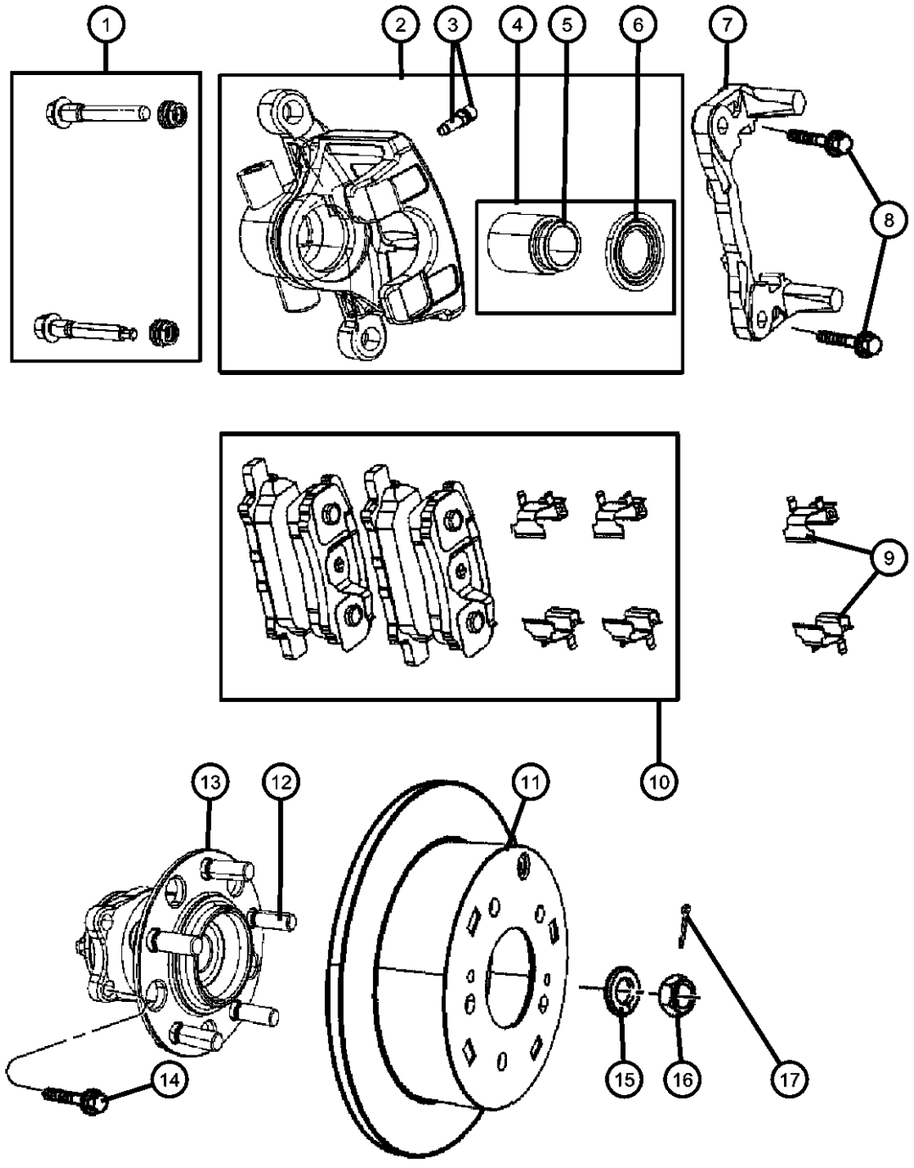

ITEM	PART NUMBER	QTY	LINE	SERIES	BODY	ENGINE	TRANS	TRIM	DESCRIPTION
1	05191247AA	1	J, T, U		49, 74				PIN KIT, Disc Brake
2									CALIPER, Disc Brake
	05191267AA	1	J, T, U		49, 74				Left
	05191268AA	1	J, T, U		49, 74				Right
3	05191285AA	1	J, T, U		49, 74				BLEEDER SCREW, Brake
4	05191246AA	1	J, T, U		49, 74				PISTON KIT, Rear Brake
5	05191270AA	1	J, T, U		49, 74				SEAL, Caliper Piston
6	05191269AA	1	J, T, U		49, 74				BOOT, Brake Piston
7	05191291AA	1	J, T, U		49, 74				ADAPTER, Disc Brake CaliperRight or Left
8	MU000335	4	J, T, U		49, 74				BOLT, Hex Head, Caliper to knuckle, Mounting
9	05191221AA	1	J, T, U		49, 74				CLIP, Brake Caliper, As Required
10	05191271AB	1	J, T, U		49, 74				PAD KIT, Rear Disc Brake
11	05105515AA	2	J, T, U		49, 74				ROTOR, Brake
12									STUD, Hub
	MB911495	5	J, U		49, 74				
		5	T		49, 74				
13									HUB AND BEARING, Brake
	05105719AB	2	T		49, 74				
	05105770AC	2	J, U		49, 74				
14									BOLT, Hex Flange Head, M12x1.25x30.50
	06509242AA	8	J, T, U		49				Hub and Bearing to Trailing Arm, Mounting
		8	J, T, U		74				Hub and Bearing to Trailing Arm, Mounting
15	06503352	2							WASHER, Flat, M23x38.0x405Mounting
16	3885A009	2							NUT, Hex LockMounting
17	MF472085	2							PIN, Cotter, 4x30

COMPASS/PATRIOT (MK)

SERIES	LINE	BODY	ENGINE	TRANSMISSION
H = HIGHLINE L = LOWLINE P = PREMIUM	J = JEEP - 4WD T = JEEP - 2WD	49 = HATCHBACK TYPE #2 74 = SPORT UTILITY 4-DR TYPE #4	ED3 = 2.4L 4 Cyl DOHC 16V Dual VVT Engine	DD7 = 5-Speed Manual T355 Transmission DEF = 6-Speed Manual Aisin BG6 Trans DAV = Continuously Variable Transmission DAW = Cont.Var. w/Off-Rd Crawl Ratio Trans

AR = use ase required - = Non illustrrated part

Booster,Power Brake
Figure 5-310

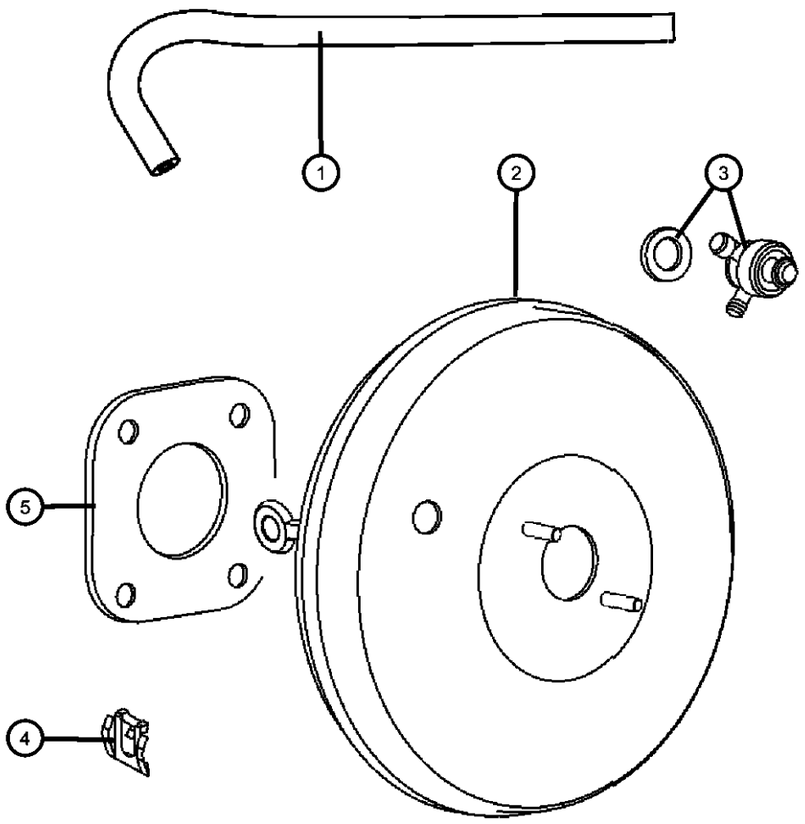

ITEM	PART NUMBER	QTY	LINE	SERIES	BODY	ENGINE	TRANS	TRIM	DESCRIPTION
1									HOSE, Vacuum Supply
	05105153AE	1	J, T, U		49, 74				[ED3] Connector to Engine
	05105155AC	1	J, T, U		49, 74				[ECD] Connector to Engine
	05105156AD	1	J, T		49, 74				Booster to Connector
	05105157AF	1	U						Booster to Connector
2									BOOSTER, Power Brake
	05175098AA	1	J, T		49, 74				
	05175707AA	1	U		49, 74				
3									VALVE, Check
	05175096AA	1	U		49, 74				
		1	J, T		49, 74				
4	06035334	1	J, T, U		49, 74				CLIP
5									GASKET, Booster To Dash
	05175095AA	1	U		49, 74				Mounting
		1	J, T		49, 74				Mounting

COMPASS/PATRIOT (MK)

SERIES	LINE	BODY	ENGINE	TRANSMISSION
H = HIGHLINE L = LOWLINE P = PREMIUM	J = JEEP - 4WD T = JEEP - 2WD	49 = HATCHBACK TYPE #2 74 = SPORT UTILITY 4-DR TYPE #4	ED3 = 2.4L 4 Cyl DOHC 16V Dual VVT Engine	DD7 = 5-Speed Manual T355 Transmission DEF = 6-Speed Manual Aisin BG6 Trans DAV = Continuously Variable Transmission DAW = Cont.Var. w/Off-Rd Crawl Ratio Trans

AR = use ase required - = Non illustrrated part

Master Cylinder,Brake
Figure 5-410

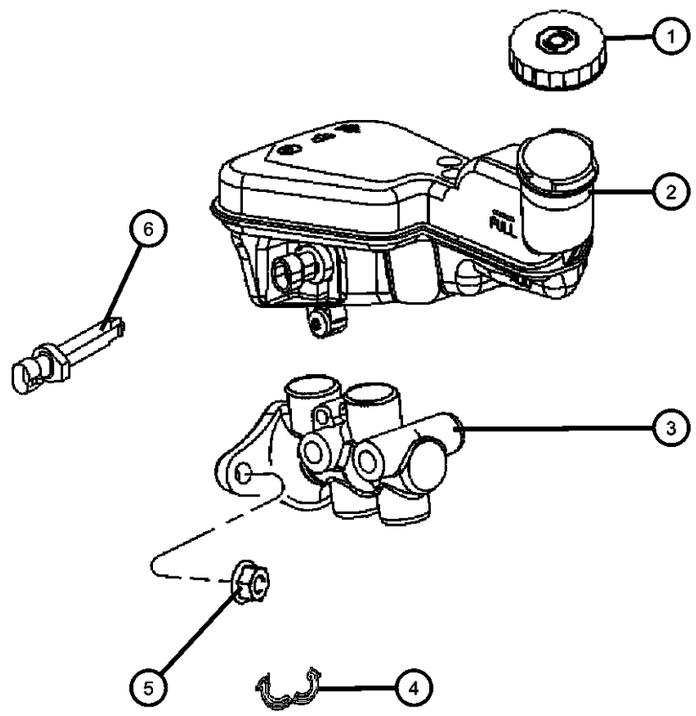

ITEM	PART NUMBER	QTY	LINE	SERIES	BODY	ENGINE	TRANS	TRIM	DESCRIPTION
1									CAP, Master Cylinder Reservoir
	05014518AA	1	J, T		49, 74				
		1	U		49, 74				
2									RESERVOIR, Brake Master Cylinder
	05175091AA	1	J, T		49, 74				With Switch
	05175705AA	1	U		49, 74				With Switch
3									MASTER CYLINDER, Brake
	05175093AA	1	J, T		49, 74				
	05175704AA	1	U		49, 74				
4	05105902AB	1	J, T		49, 74				BLOCKER, Reservoir Blocker
5									NUT AND WASHER KIT
	05175097AA	2	J, T		49, 74				Master Cylinder to Booster, Mounting
		1	U		49, 74				Master Cylinder to Booster, Mounting
6									SENSOR, Brake Fluid Level
	05175094AA	1	U		49, 74				Reservoir
		1	J, T		49, 74				Reservoir

COMPASS/PATRIOT (MK)

SERIES	LINE	BODY	ENGINE	TRANSMISSION
H = HIGHLINE L = LOWLINE P = PREMIUM	J = JEEP - 4WD T = JEEP - 2WD	49 = HATCHBACK TYPE #2 74 = SPORT UTILITY 4-DR TYPE #4	ED3 = 2.4L 4 Cyl DOHC 16V Dual VVT Engine	DD7 = 5-Speed Manual T355 Transmission DEF = 6-Speed Manual Aisin BG6 Trans DAV = Continuously Variable Transmission DAW = Cont.Var. w/Off-Rd Crawl Ratio Trans

Brake Lines and Hoses,Front
Figure 5-510

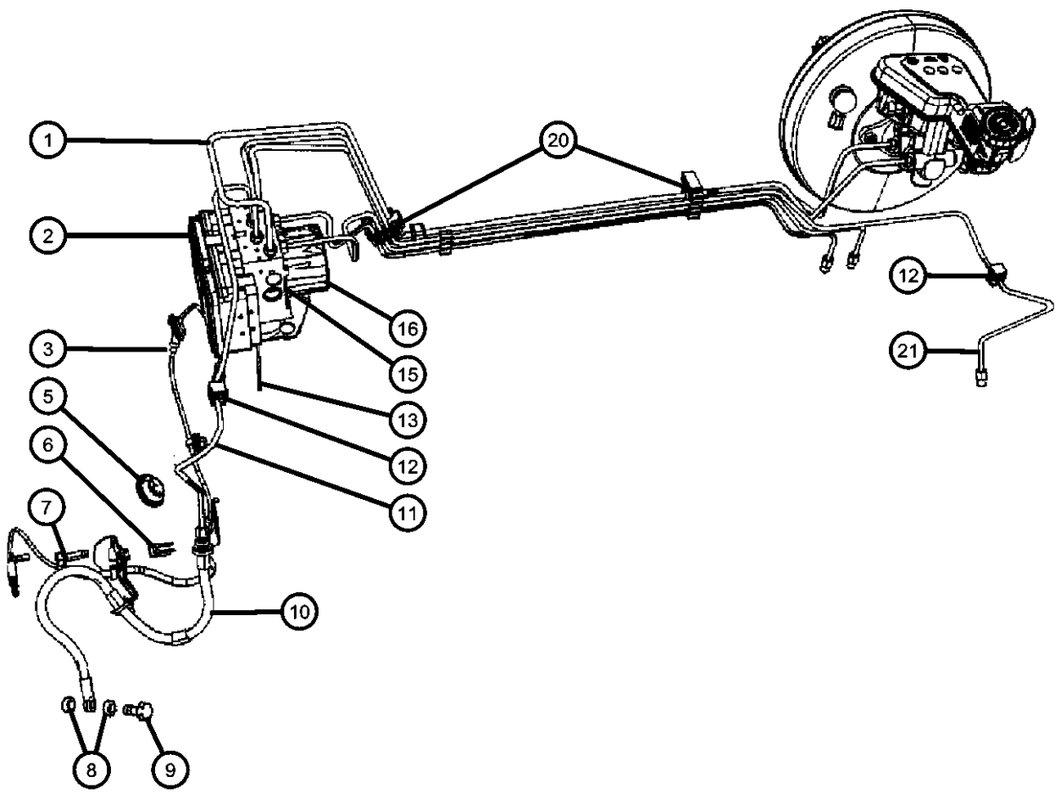

ITEM	PART NUMBER	QTY	LINE	SERIES	BODY	ENGINE	TRANS	TRIM	DESCRIPTION
1									TUBE BUNDLE, Brake
	05105417AE	1	J, T		49, 74				
	05105418AE	1	U		49, 74				
2									MODULE, Anti-Lock Brake System
	05191003AC	1	J, T		74				[BNB,BNH,BNL,BNS]
	05191006AD	1	J, T		49, 74				[BNB,BNS]
		1	U		49, 74				[BNB,BNS]
3									SENSOR, Anti-Lock Brakes
	05105572AA	1	J, T, U		49, 74				Right
	05105573AA	1	J, T, U		49, 74				Left
-4	06105037AA	2	J, T, U		49, 74				BOLT, Hex Flange Head, ABS Sensor Head to Front Knuckle, Mounting
5	05105821AB	2	J, T, U		49, 74				GROMMET, Brake Line, Mounting
6	02208893	2	J, T, U		49, 74				LOCK, Brake Hose
7									SCREW, Hex Flange Head, M8x1.25x25.00
	06105049AA	2	J, T, U		49, 74				ABS Sensor to Strut Bracket
		2	J, T, U		49, 74				ABS Sensor to Strut Bracket, Mounting
8	06502114	4	J, T, U		49, 74				WASHER, Brake HoseMounting
9	MR249625	2	J, T, U		49, 74				BOLT, Banjo, Brake Hose to Caliper, Mounting
10									HOSE, Brake
	05105603AC	1	J, T, U		49, 74				Left
	05105604AC	1	J, T, U		49, 74				Right
11									TUBE, Brake
	05105199AE	1	J, T		49, 74				Right
	05105778AB	1	U		49, 74				Right
12									CLIP, Brake Line
	05175421AA	1	J, T		49, 74				1-Way, Mounting
		1	U		49, 74				1-Way, Mounting
13									BRACKET, Brake Control Unit
	05179863AA	1	J, T		49, 74				
	05179866AA	1	U		49, 74				

COMPASS/PATRIOT (MK)

SERIES	LINE	BODY	ENGINE	TRANSMISSION
H = HIGHLINE L = LOWLINE P = PREMIUM	J = JEEP - 4WD T = JEEP - 2WD	49 = HATCHBACK TYPE #2 74 = SPORT UTILITY 4-DR TYPE #4	ED3 = 2.4L 4 Cyl DOHC 16V Dual VVT Engine	DD7 = 5-Speed Manual T355 Transmission DEF = 6-Speed Manual Aisin BG6 Trans DAV = Continuously Variable Transmission DAW = Cont.Var. w/Off-Rd Crawl Ratio Trans

Brake Lines and Hoses,Front
Figure 5-510

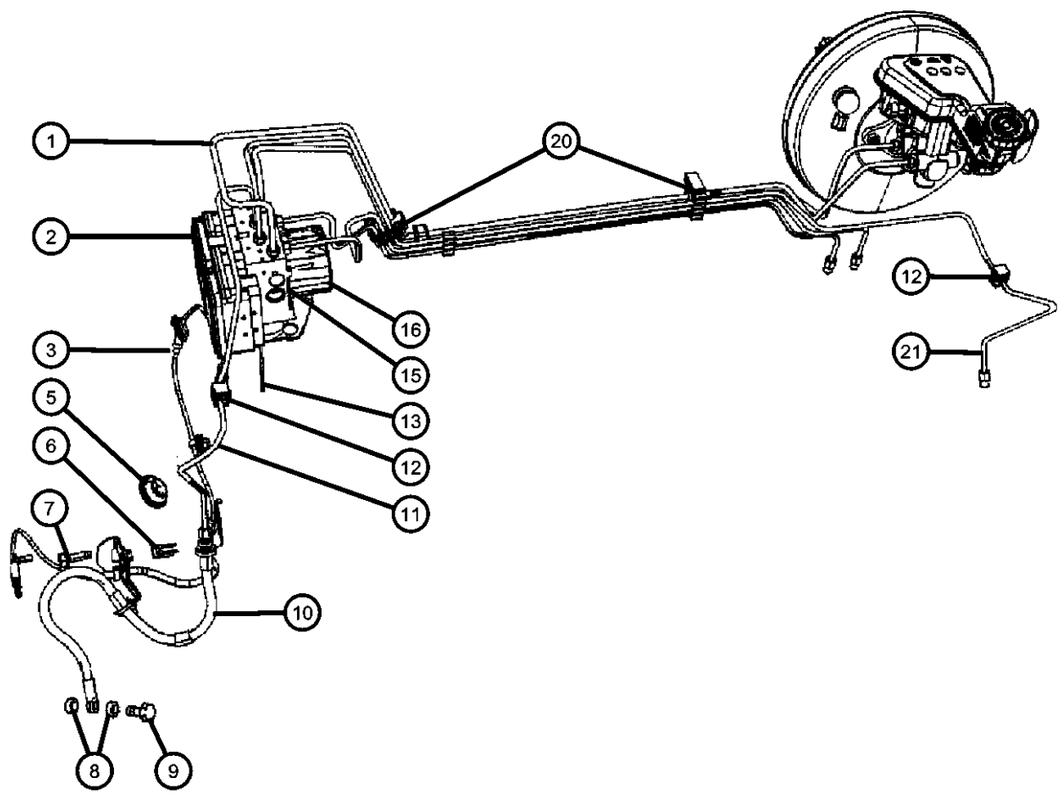

ITEM	PART NUMBER	QTY	LINE	SERIES	BODY	ENGINE	TRANS	TRIM	DESCRIPTION
-14									SCREW, Hex Head
	05191002AA	1	J, T		49, 74				HCU Bracket, Mounting
		1	U		49, 74				HCU Bracket, Mounting
15									O RING
	05159024AA	1	J, T		49, 74				Pump Tower, Mounting
		1	U		49, 74				Pump Tower, Mounting
16									HYDRAULIC CONTROL UNIT, Anti-Lock Brake System
	05179862AA	1	J, T		49, 74				[BNB,BNS]
	05179865AA	1	U		49, 74				[BNB,BNS]
	68020715AA	1	J, T		74				[BNB,BNH,BNL,BNS]
-17									SCREW
	06104388AA	1	U						ICU to Frame Rail, Mounting
		2	J, T						ICU to Frame Rail, Mounting
-18	06104726AA	1	U						NUT, ICU to Shock Tower, Mounting
-19									SEAL, ECU Coil Seal
	68020717AA	12	U		49, 74				
		12	J, T		49, 74				
20									CLIP, Brake Line
	05175418AA	1	J, T		49, 74				2-Way, Mounting
	05175419AA	1	J, T		49, 74				3-Way, Mounting
	05175422AA	3	U		49, 74				6-Way, Mounting
		2	J, T		49, 74				6-Way, Mounting
21									TUBE, Brake
	05105167AD	1	U		49, 74				HCU to Brake Hose, Left
	05171123AC	1	J, T		49, 74				HCU to Brake Hose, Left

COMPASS/PATRIOT (MK)

SERIES	LINE	BODY	ENGINE	TRANSMISSION
H = HIGHLINE L = LOWLINE P = PREMIUM	J = JEEP - 4WD T = JEEP - 2WD	49 = HATCHBACK TYPE #2 74 = SPORT UTILITY 4-DR TYPE #4	ED3 = 2.4L 4 Cyl DOHC 16V Dual VVT Engine	DD7 = 5-Speed Manual T355 Transmission DEF = 6-Speed Manual Aisin BG6 Trans DAV = Continuously Variable Transmission DAW = Cont.Var. w/Off-Rd Crawl Ratio Trans

Brake Lines and Hoses,Rear
Figure 5-520

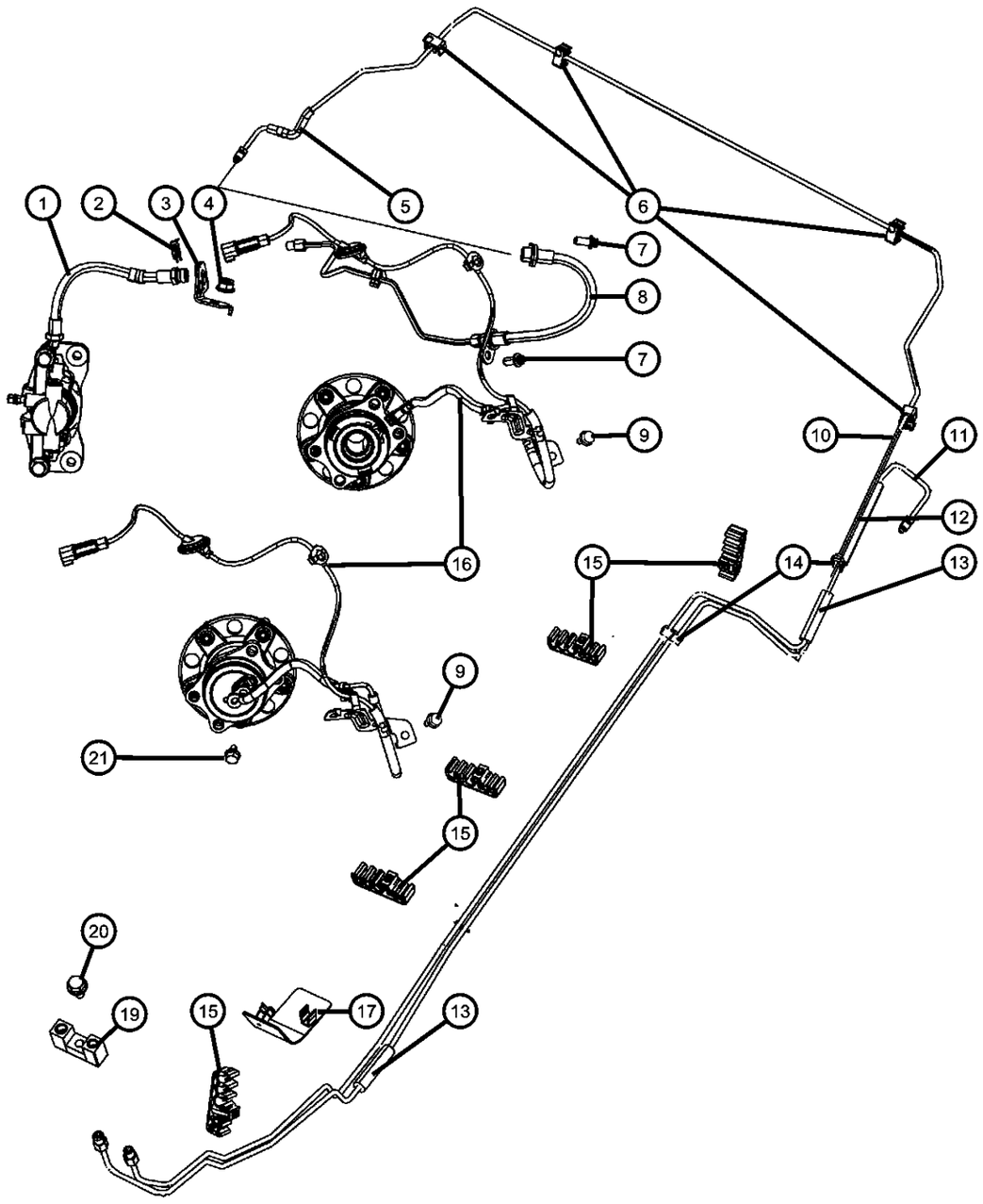

ITEM	PART NUMBER	QTY	LINE	SERIES	BODY	ENGINE	TRANS	TRIM	DESCRIPTION
1	05105654AA	2	J, T, U		49, 74				HOSE AND TUBE, Brake, To Caliper
2	02208893	2	J, T, U		49, 74				LOCK, Brake HoseMounting
3									BRACKET, Brake Hose
	05105656AA	1	J, T, U		49, 74				Right
	05105657AA	1	J, T, U		49, 74				Left
4									NUT
	06104716AA	2	T						Brake Hose Bracket to Body, Mounting
		2	J, U						Brake Hose Bracket to Body, Mounting
5	68001906AA	1	J, T, U		49, 74				SLEEVE, Rubber, 78.3MM
6									CLIP, Fuel Line
	05189343AA	4	J, T, U		49, 74				2 Way
	68019081AA	1	J, T, U		49, 74				2-Way [ECD] Only
	68019084AA	1	J, T, U		49, 74				Plastic Shield [ECD] Only
7	06508532AA	2	J, T, U		49, 74				SCREW, Brake Hose and Tube Assembly to Body, Mounting
8									HOSE AND TUBE, Brake
	05105426AC	1	J, T, U		74, 49				Right
	05105427AC	1	J, T, U		49, 74				Left
9	06105048AA	2							SCREW, Brake Hose and Tube Assembly to Body, Mounting
10	05189340AB	1	J, T, U		49, 74				TUBE, Brake, Right Rear
11	05189341AB	1	J, T, U		49, 74				TUBE, Brake, Left Rear
12	68019043AA	1	J, T, U		49, 74				BUMPER, Rubber
13									BUMPER, Rubber
	05189344AA	2	J, T, U		49, 74				[ED3]
		1	J, T, U		49, 74				[ECD]
14									CLIP, Fuel Bundle
	04582074	2	J, T, U		49, 74				2-Way
	05137750AB	1	J, T, U		49, 74				Structural Metal
15	05189342AA	6	J, T, U		49, 74				CLIP, Fuel Line, 5 Way
16									SENSOR, Anti-Lock Brakes
	05105062AA	1	T		49, 74				Right
	05105063AB	1	T		49, 74				Left

COMPASS/PATRIOT (MK)

SERIES	LINE	BODY	ENGINE	TRANSMISSION
H = HIGHLINE L = LOWLINE P = PREMIUM	J = JEEP - 4WD T = JEEP - 2WD	49 = HATCHBACK TYPE #2 74 = SPORT UTILITY 4-DR TYPE #4	ED3 = 2.4L 4 Cyl DOHC 16V Dual VVT Engine	DD7 = 5-Speed Manual T355 Transmission DEF = 6-Speed Manual Aisin BG6 Trans DAV = Continuously Variable Transmission DAW = Cont.Var. w/Off-Rd Crawl Ratio Trans

Brake Lines and Hoses,Rear
Figure 5-520

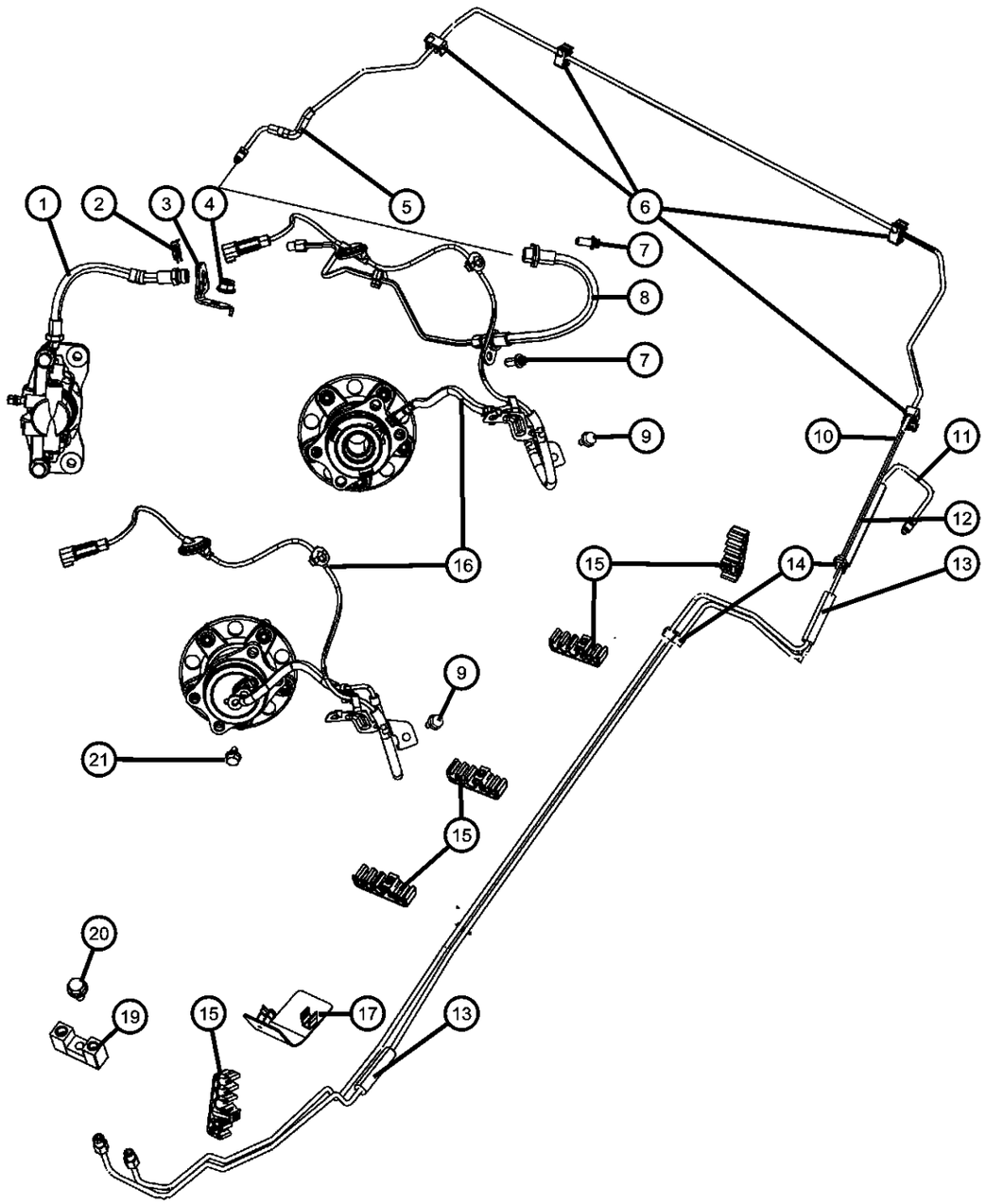

ITEM	PART NUMBER	QTY	LINE	SERIES	BODY	ENGINE	TRANS	TRIM	DESCRIPTION
	05105064AA	1	J, U		49, 74				Right
	05105065AB	1	J, U		49, 74				Left
17									SHIELD, Fuel and Brake Bundle
	68019078AA	1	J, T, U		49, 74				[ED3]
	68019092AA	1	J, T, U		49, 74				[ECD]
-18	05105811AA	1	J, T, U		49, 74				SHIELD, Fuel Line, [ECD] Only
19	05105682AA	1	J, T, U		49, 74				JUNCTION BLOCK, Brake Tube
20	06105038AA	1	J, T, U		49, 74				SCREW, Hex Flange Head, M6x1.00x25.00, Junction Block to Body, Mounting
21	05073824AA	1	T		49, 74				SCREW, ABS Sensor to Hub, Mounting
-22	68001857AA	1	J, T, U		49, 74				TIE STRAP

COMPASS/PATRIOT (MK)

SERIES	LINE	BODY	ENGINE	TRANSMISSION
H = HIGHLINE L = LOWLINE P = PREMIUM	J = JEEP - 4WD T = JEEP - 2WD	49 = HATCHBACK TYPE #2 74 = SPORT UTILITY 4-DR TYPE #4	ED3 = 2.4L 4 Cyl DOHC 16V Dual VVT Engine	DD7 = 5-Speed Manual T355 Transmission DEF = 6-Speed Manual Aisin BG6 Trans DAV = Continuously Variable Transmission DAW = Cont.Var. w/Off-Rd Crawl Ratio Trans

AR = use ase required - = Non illustrrated part

Pedals,Brake
Figure 5-610

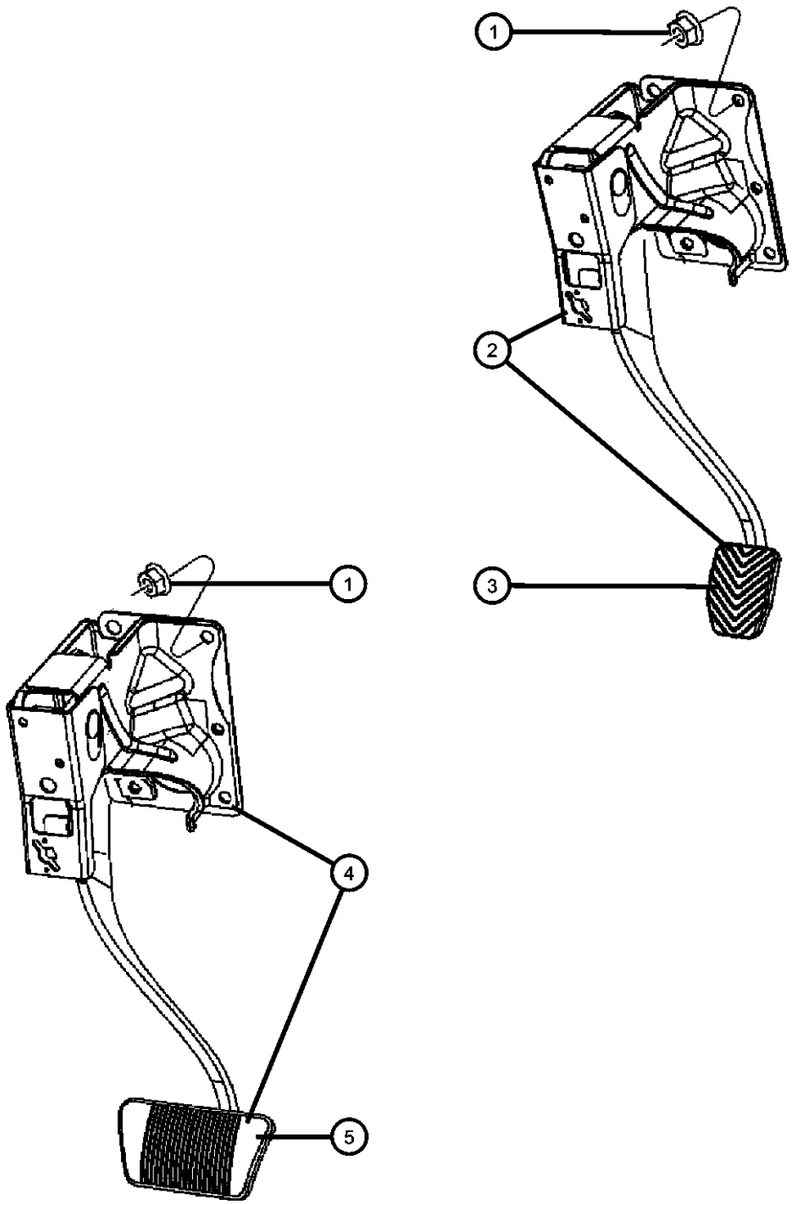

ITEM	PART NUMBER	QTY	LINE	SERIES	BODY	ENGINE	TRANS	TRIM	DESCRIPTION
Note:Sales Codes; [DAV]=Continously Variable Transaxle [DAW]=Continously Variable Transaxle with Off Road Crawl Ratio [DD7]=5-Speed Manual T355 Transmission [DEF]=6-Speed Manual Aisin BG6 Transmission									
1	06104716AA	5	J, T, U		49, 74				NUT, Brake Pedal Bracket to Dash, Mounting
2									PEDAL, Brake
	05105520AF	1	U		49, 74				[DD7,DEF]
	05105522AF	1	J, T		49, 74				[DD7,DEF]
3									PAD, Pedal
	05170975AB	1	U		49, 74				[DD7,DEF]
		1	J, T		49, 74				[DD7,DEF]
4									PEDAL, Brake
	05105521AG	1	U		49, 74				[DAV,DAW]
	05105523AG	1	J, T		49, 74				[DAV,DAW]
5									PAD, Pedal
	68020438AA	1	J, T		49, 74				[DAV,DAW]
		1	U		49, 74				[DAV,DAW]

COMPASS/PATRIOT (MK)

SERIES	LINE	BODY	ENGINE	TRANSMISSION
H = HIGHLINE L = LOWLINE P = PREMIUM	J = JEEP - 4WD T = JEEP - 2WD	49 = HATCHBACK TYPE #2 74 = SPORT UTILITY 4-DR TYPE #4	ED3 = 2.4L 4 Cyl DOHC 16V Dual VVT Engine	DD7 = 5-Speed Manual T355 Transmission DEF = 6-Speed Manual Aisin BG6 Trans DAV = Continuously Variable Transmission DAW = Cont.Var. w/Off-Rd Crawl Ratio Trans

Group - 6

Clutch

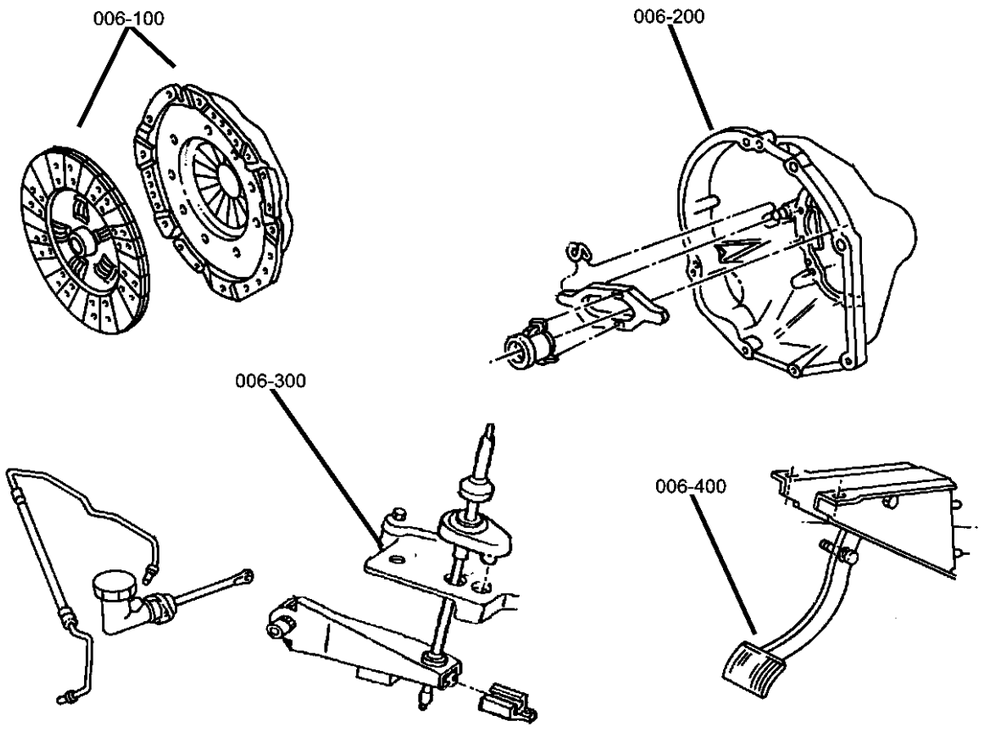

006-100 Clutch	006-300 Clutch Controls	006-400 Clutch Pedals	
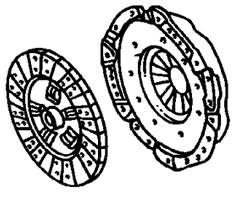	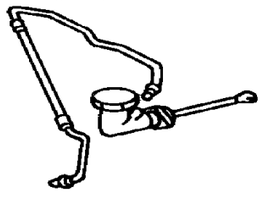	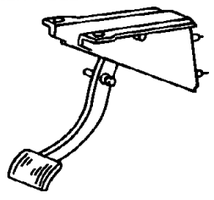	

Group - 6 Clutch

Illustration Title — Group-Fig. No.

Clutch
Clutch Assembly,[DEF] Transmission ..... Fig. 6 - 110
Clutch Assembly,[DD7] Transmission ..... Fig. 6 - 120

Clutch Controls
Hydraulic Clutch Actuator,Slave Cylinder and Hose ..... Fig. 6 - 310

Clutch Pedals
Clutch Pedal ..... Fig. 6 - 410

Clutch Assembly,[DEF] Transmission
Figure 6-110

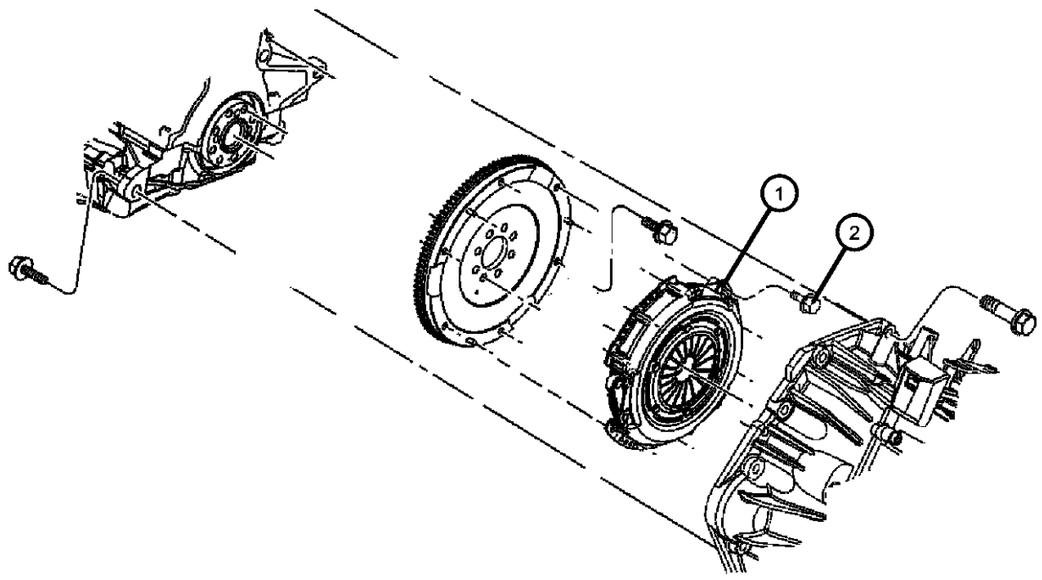

ITEM	PART NUMBER	QTY	LINE	SERIES	BODY	ENGINE	TRANS	TRIM	DESCRIPTION
NOTE:Sales Codes: [DEF]=6-Speed Manual Transmission									
1	05106018AA	1				ECD	DEF		CLUTCH KIT, Pressure Plate and Disc
2	06508455AA	6				ECD	DEF		BOLT, Pressure Plate to Flywheel, Mounting

COMPASS/PATRIOT (MK)

SERIES	LINE	BODY	ENGINE	TRANSMISSION
H = HIGHLINE L = LOWLINE P = PREMIUM	J = JEEP - 4WD T = JEEP - 2WD	49 = HATCHBACK TYPE #2 74 = SPORT UTILITY 4-DR TYPE #4	ED3 = 2.4L 4 Cyl DOHC 16V Dual VVT Engine	DD7 = 5-Speed Manual T355 Transmission DEF = 6-Speed Manual Aisin BG6 Trans DAV = Continuously Variable Transmission DAW = Cont.Var. w/Off-Rd Crawl Ratio Trans

Clutch Assembly,[DD7] Transmission
Figure 6-120

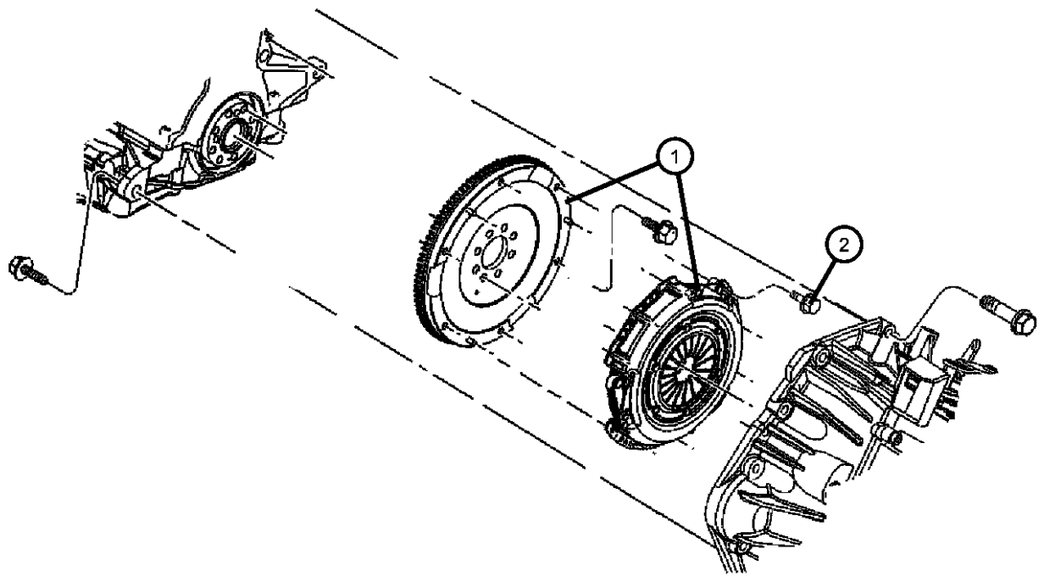

ITEM	PART NUMBER	QTY	LINE	SERIES	BODY	ENGINE	TRANS	TRIM	DESCRIPTION
NOTE:Sales Codes: [DD7]=5 Speed Manual Transmission									
1	05062150AD	1	J, T, U			ED3	DD7		CLUTCH KIT, Pressure Plate and Disc
2	06504383	4	J, T, U			ED3	DD7		BOLT, Hex Head, M10x1.50 x 13.20, Pressure Plate to Flywheel, Mounting

COMPASS/PATRIOT (MK)

SERIES	LINE	BODY	ENGINE	TRANSMISSION
H = HIGHLINE L = LOWLINE P = PREMIUM	J = JEEP - 4WD T = JEEP - 2WD	49 = HATCHBACK TYPE #2 74 = SPORT UTILITY 4-DR TYPE #4	ED3 = 2.4L 4 Cyl DOHC 16V Dual VVT Engine	DD7 = 5-Speed Manual T355 Transmission DEF = 6-Speed Manual Aisin BG6 Trans DAV = Continuously Variable Transmission DAW = Cont.Var. w/Off-Rd Crawl Ratio Trans

Hydraulic Clutch Actuator,Slave Cylinder and Hose
Figure 6-310

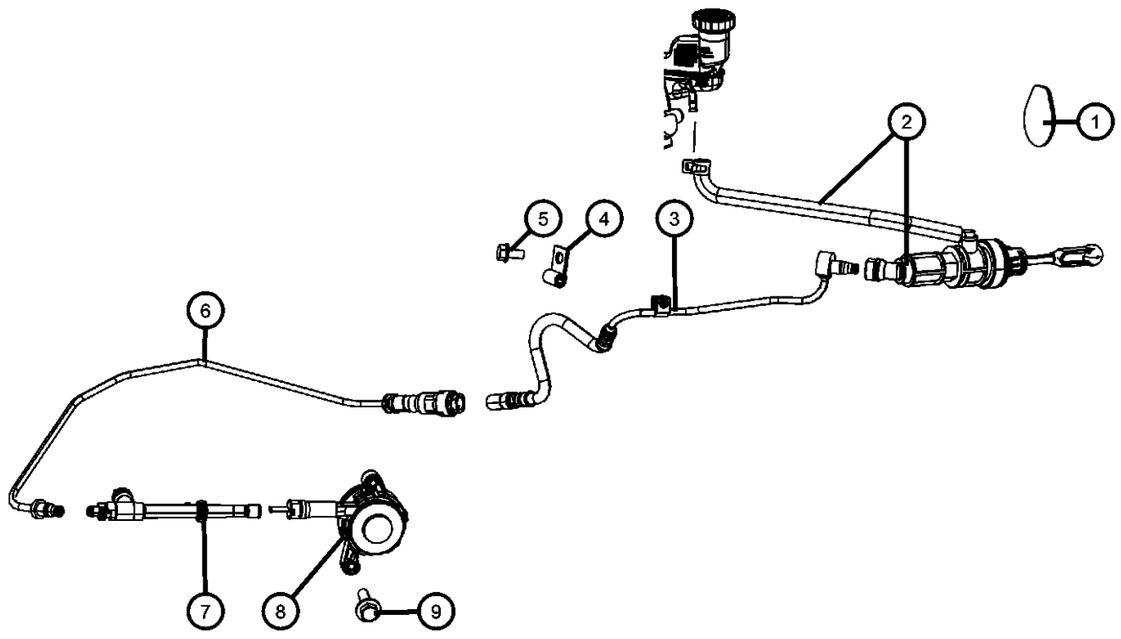

ITEM	PART NUMBER	QTY	LINE	SERIES	BODY	ENGINE	TRANS	TRIM	DESCRIPTION
NOTE:Sales Codes: [DD7]=5 Speed Manual Transmission [DEF]=6-Speed Manual Transmission									
1									PLUG, Body
	05273470AB	2	U				DAV		Clutch Actuator Hole Cover
		1	J, T				DAV, DAW		Clutch Actuator Hole Cover
		1	U				DD7, DEF		Clutch Actuator Hole Cover
2									ACTUATOR, Hydraulic Clutch
	05106043AA	1	J, T				DD7, DEF		
	05273266AD	1	U				DD7, DEF		
3									HOSE, Clutch Hydraulic
	05273427AB	1	J, T				DD7, DEF		
	05273428AB	1	U				DD7, DEF		
4	06508622AA	1	J, T, U				DD7, DEF		CLIP, Clutch Tube
5	06104022AB	1	J, T, U				DD7, DEF		SCREW, Clutch Tube Clip, Mounting
6									TUBE, Clutch M/Cyl
	05273429AB	1	J, T, U				DD7		
	05273460AB	1	J, T, U				DEF		
7									ADAPTER, CLUTCH SLAVE CYLINDER, LOWER
	05106032AA	1	J, T, U				DD7		
	05273461AA	1	J, T, U				DEF		
8	05273431AA	1	J, T, U				DD7, DEF		CYLINDER, Clutch Slave
9	06104124AA	2	J, T, U				DD7, DEF		BOLT, Clutch Slave Cylinder to Manual Transaxle, Mounting

COMPASS/PATRIOT (MK)

SERIES	LINE	BODY	ENGINE	TRANSMISSION
H = HIGHLINE L = LOWLINE P = PREMIUM	J = JEEP - 4WD T = JEEP - 2WD	49 = HATCHBACK TYPE #2 74 = SPORT UTILITY 4-DR TYPE #4	ED3 = 2.4L 4 Cyl DOHC 16V Dual VVT Engine	DD7 = 5-Speed Manual T355 Transmission DEF = 6-Speed Manual Aisin BG6 Trans DAV = Continuously Variable Transmission DAW = Cont.Var. w/Off-Rd Crawl Ratio Trans

Clutch Pedal
Figure 6-410

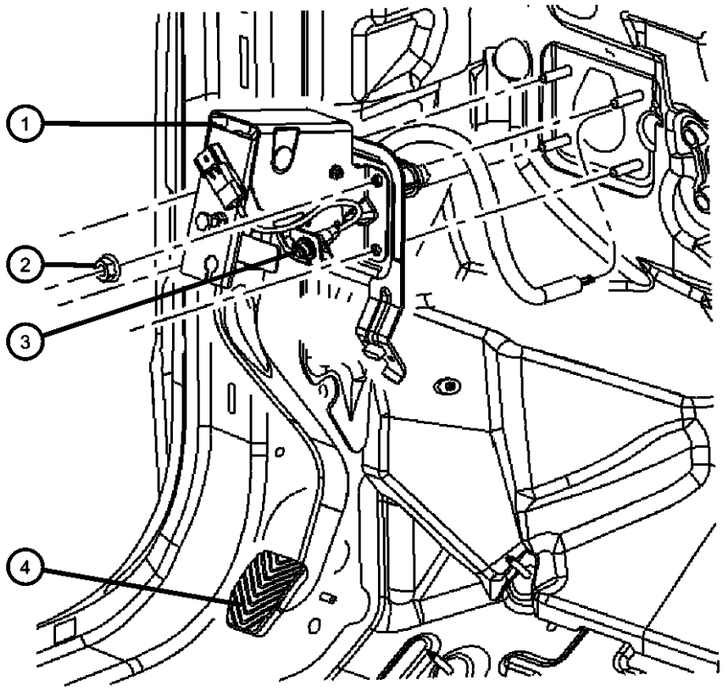

ITEM	PART NUMBER	QTY	LINE	SERIES	BODY	ENGINE	TRANS	TRIM	DESCRIPTION
NOTE:Sales Codes: [DD7]=5 Speed Manual Transmission [DEF]=6-Speed Manual Transmission									
1									PEDAL, Clutch
	05273419AF	1	J, T				DD7		
	05273424AH	1	J, T				DEF		
	05273425AF	1	U				DD7		
	05273426AH	1	U				DEF		
2	06104709AA	4	J, T, U				DD7, DEF		NUT, M8, Clutch Pedal to Dash, Mounting
3									SWITCH, Clutch Starter Interlock
	05026131AB	1	J, T				DD7		
		1	U				DD7		
	05026410AA	1	J, T				DEF		
		1	U				DEF		
4									PAD, Pedal
	05170975AB	1	J, T				DD7		
		1	U				DD7		
		1	J, T				DEF		
		1	U				DEF		

COMPASS/PATRIOT (MK)

SERIES	LINE	BODY	ENGINE	TRANSMISSION
H = HIGHLINE L = LOWLINE P = PREMIUM	J = JEEP - 4WD T = JEEP - 2WD	49 = HATCHBACK TYPE #2 74 = SPORT UTILITY 4-DR TYPE #4	ED3 = 2.4L 4 Cyl DOHC 16V Dual VVT Engine	DD7 = 5-Speed Manual T355 Transmission DEF = 6-Speed Manual Aisin BG6 Trans DAV = Continuously Variable Transmission DAW = Cont.Var. w/Off-Rd Crawl Ratio Trans

Group - 7

Cooling

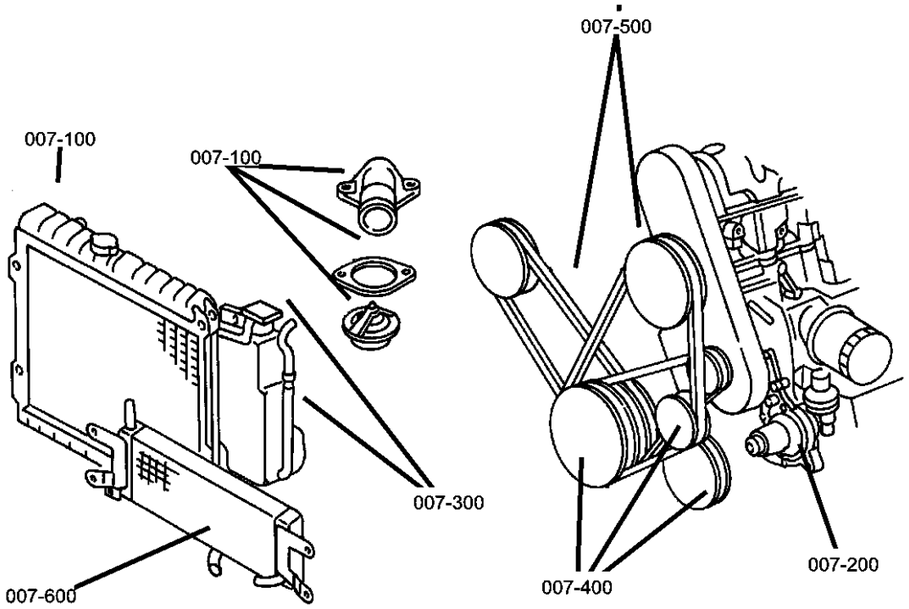

007-100 Radiator and Related Parts 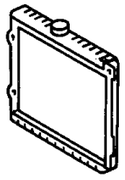	**007-200** Water Pump and Related Parts 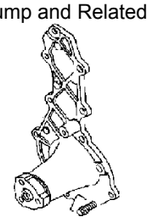	**007-300** Tank, Coolant Engine 	**007-400** Pulleys and Related Parts 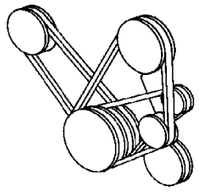
007-500 Drive Belts 	**007-600** Lines, Transmission Oil Cooler 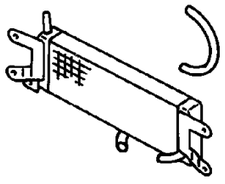	**007-700** Grilles 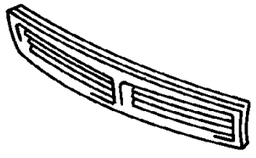	

Group - 7 Cooling

Illustration Title — Group-Fig. No.

Radiator and Related Parts
Radiator and Related Parts ..... Fig. 7 - 110
Charge Air Cooler ..... Fig. 7 - 120

Water Pump and Related Parts
Water Pump [2.4L ED3] ..... Fig. 7 - 210
Water Pump And Plumbing 2.0L Diesel [ECD] ..... Fig. 7 - 220

Tank, Coolant Engine
Coolant Reserve Tank 2.0L [ECD] Diesel ..... Fig. 7 - 310
Coolant Reserve Tank Gas Engines ..... Fig. 7 - 320

Pulleys and Related Parts
Pulleys and Related Parts [2.4L ED3] ..... Fig. 7 - 410
Pulleys and Related Parts 2.0L [ECD] Diesel ..... Fig. 7 - 420

Drive Belts
Belts ..... Fig. 7 - 510

Lines, Transmission Oil Cooler
Lines, Oil Cooler ..... Fig. 7 - 610

Grilles
Grille and Related Parts ..... Fig. 7 - 710

Radiator and Related Parts
Figure 7-110

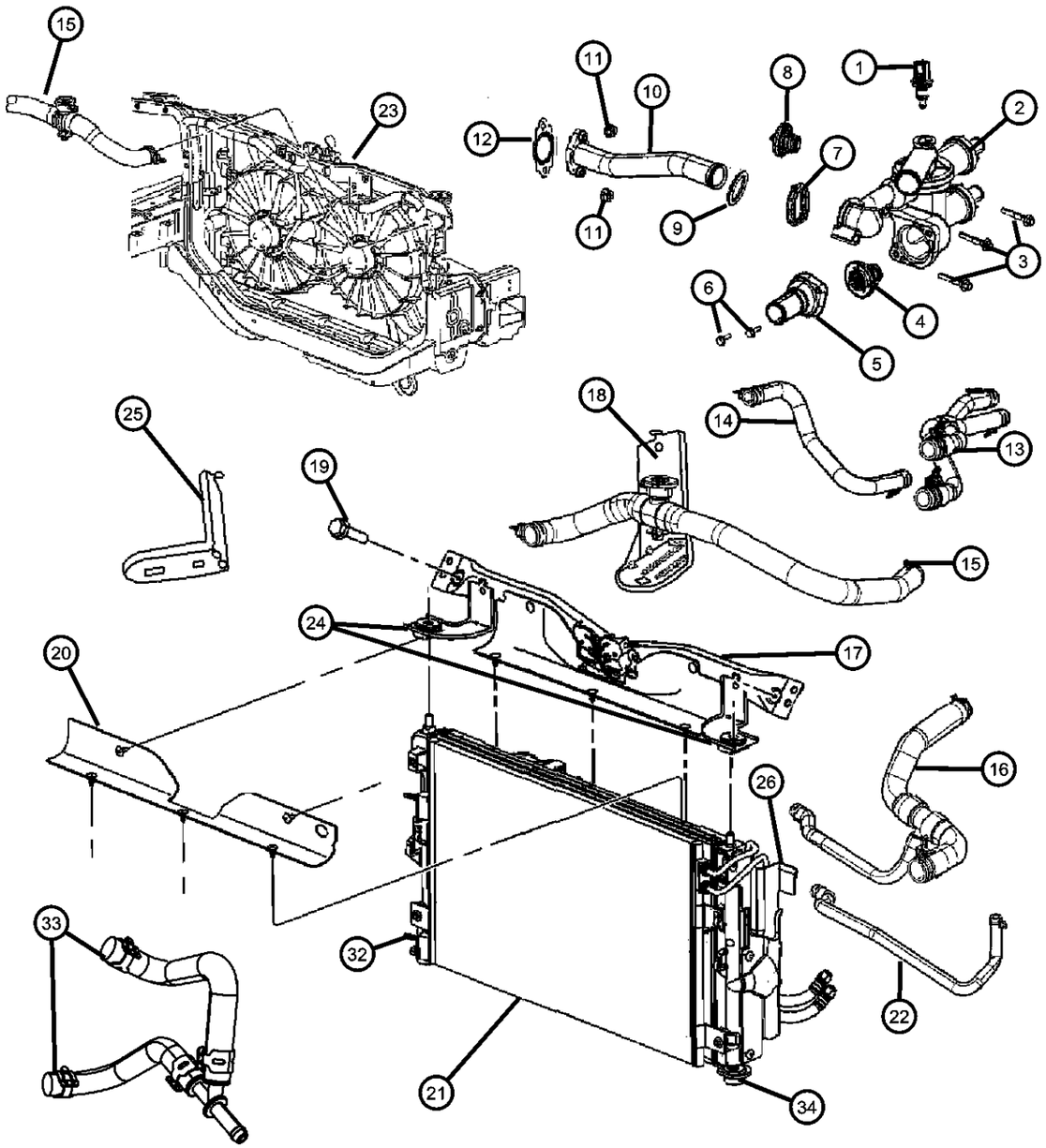

ITEM	PART NUMBER	QTY	LINE	SERIES	BODY	ENGINE	TRANS	TRIM	DESCRIPTION
Sales Codes:									
[DAV] = Continuously Variable Transmission									
[DD7] = 5 Speed Manual T355 Transmission									
[DEF] = 6-Speed Manual Aisin BG6 Transmission									
[EBA] = 1.8L 4 CYL DOHC 16V Dual VVT Engine									
[ECN] = 2.0L 4 CYL DOHC 16V Dual VVT Engine									
[ECD] = 2.0L 4 CYL									
1	05033313AA	1				ED3			SENSOR, Coolant Temperature
2	04884569AB	1				ED3			ADAPTER
3									BOLT
	06508393AA	3				ED3			
		3	J			ED3			
4									THERMOSTAT, Engine Coolant
	55111016AB	1				ED3			
	68000800AA	1				ECD			
5									HOUSING, Thermostat
	04884571AB	1				ED3			
	68000804AA	1				ECD			
6									BOLT
	06508355AA	2				ED3			
		2	J			ED3			
		2	J, T, U			ED3			
7									SEAL
	04884572AA	1				ED3			
		1	J			ED3			
8	68003583AA	1	J, T, U			ED3			THERMOSTAT PACKAGE, Engine Coolant
9									O RING, Water Inlet Tube
	04884873AA	1				ED3			
		1	J			ED3			
10									TUBE, Water Inlet
	04884697AB	1				ED3			
		1	J			ED3			
11	06104709AA	2				ED3			NUT, M8
12									GASKET, Water Inlet

COMPASS/PATRIOT (MK)

SERIES	LINE	BODY	ENGINE	TRANSMISSION
H = HIGHLINE L = LOWLINE P = PREMIUM	J = JEEP - 4WD T = JEEP - 2WD	49 = HATCHBACK TYPE #2 74 = SPORT UTILITY 4-DR TYPE #4	ED3 = 2.4L 4 Cyl DOHC 16V Dual VVT Engine	DD7 = 5-Speed Manual T355 Transmission DEF = 6-Speed Manual Aisin BG6 Trans DAV = Continuously Variable Transmission DAW = Cont.Var. w/Off-Rd Crawl Ratio Trans

AR = use ase required - = Non illustrrated part

<< RETURN TO GROUP INDEX

Radiator and Related Parts
Figure 7-110

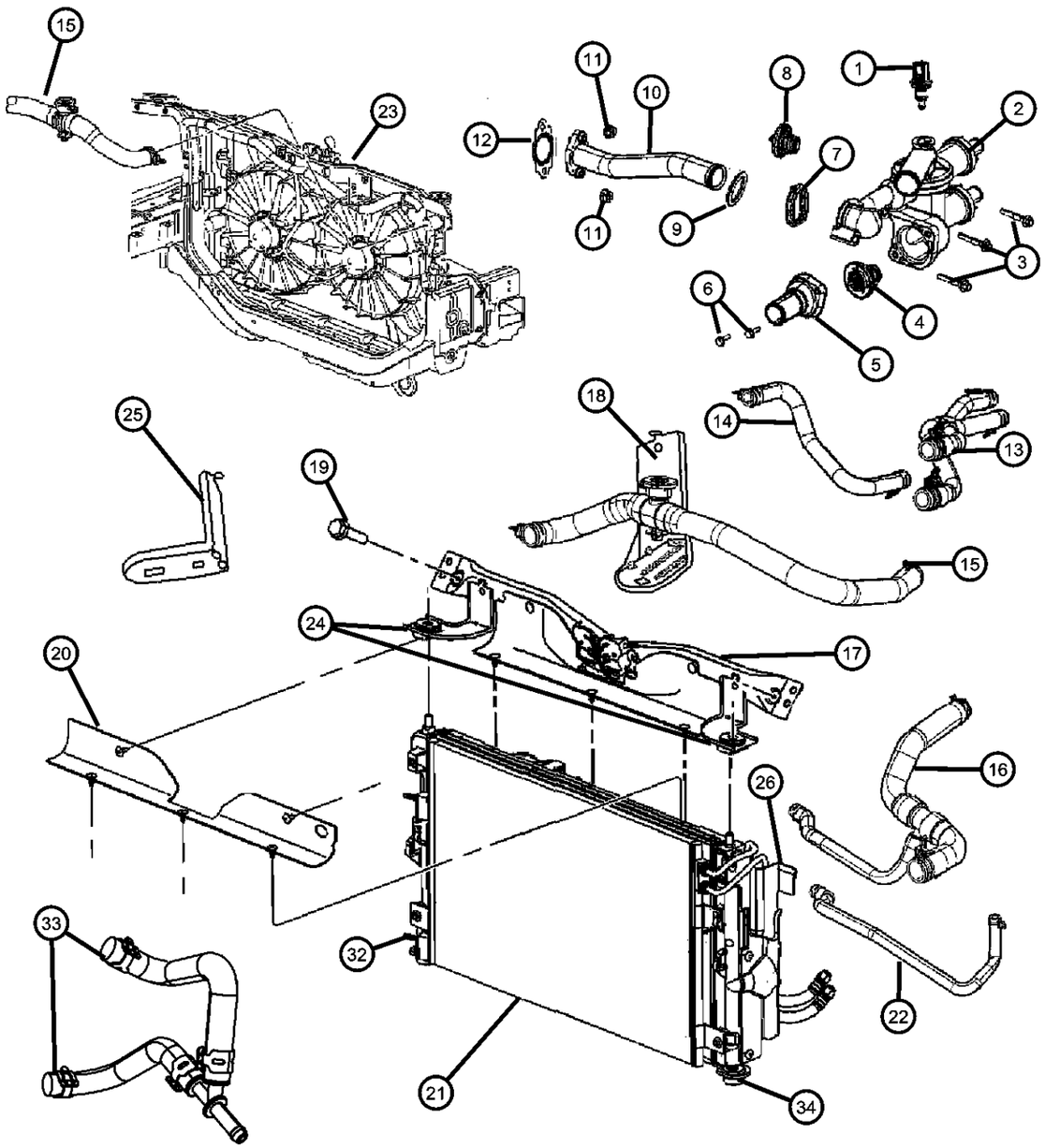

ITEM	PART NUMBER	QTY	LINE	SERIES	BODY	ENGINE	TRANS	TRIM	DESCRIPTION
	04884703AA	1				ED3			
		1	J			ED3			
13	05058262AD	1				ED3			HOSE, Heater Supply and Return
14									HOSE, Heater Supply
	05058226AD	1				ECD			
		1	J			ECD			
15									HOSE, Radiator Inlet, Radiator Inlet Hose Assembly
	05058176AD	1				ECD			
	05058172AF	1				ED3	DD7		
	05058482AD	1				ED3	DAV		Upper
	05058492AB	1				ED3	DD7		[NHA]
16									HOSE, Radiator Outlet, Radiator Outlet Hose Assembly
	05058171AD	1				ED3	DAV		
	05058174AB	1	J, T, U			ECD			
	05058413AD	1				ED3	DD7		
	05058489AD	1				ED3			
		1	J			ED3			[NHA]
17									CROSSMEMBER, Front Side Rail
	05115244AC	1	J, T, U			ED3			
		1	J, T, U			ECN, ED3			
	05160195AC	1	J, T, U			ECD			
18									BRACKET, Cooling Module, Upper
	05115966AA	1	J, T, U			ECD			
		1	J, T, U			ECN, ED3			
19									BOLT AND CONED WASHER, Hex Head, M8x1.25x25, Bracket Attaching
	06503543	4	J						Upper Radiator Support Crossmember To Body Side Rail
		4	J, T, U						Upper Radiator Support Crossmember To Body Side Rail
20									SEAL, Radiator Upper

COMPASS/PATRIOT (MK)

SERIES	LINE	BODY	ENGINE	TRANSMISSION
H = HIGHLINE L = LOWLINE P = PREMIUM	J = JEEP - 4WD T = JEEP - 2WD	49 = HATCHBACK TYPE #2 74 = SPORT UTILITY 4-DR TYPE #4	ED3 = 2.4L 4 Cyl DOHC 16V Dual VVT Engine	DD7 = 5-Speed Manual T355 Transmission DEF = 6-Speed Manual Aisin BG6 Trans DAV = Continuously Variable Transmission DAW = Cont.Var. w/Off-Rd Crawl Ratio Trans

Radiator and Related Parts
Figure 7-110

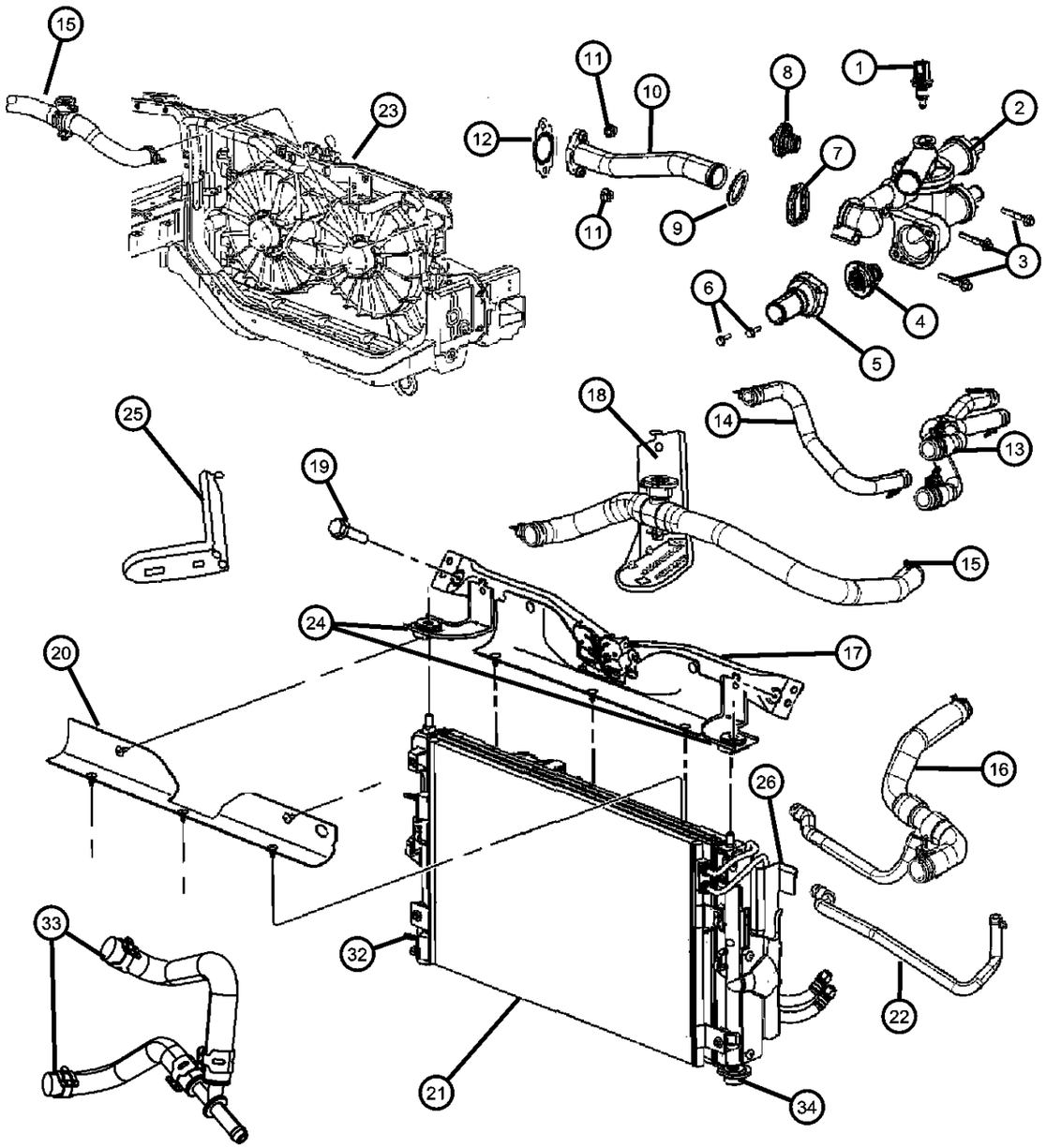

ITEM	PART NUMBER	QTY	LINE	SERIES	BODY	ENGINE	TRANS	TRIM	DESCRIPTION
	05058571AA	1	J, T, U			ED3			Serviced With Push Pin
	05058572AA	1	J, T, U			ECD			Serviced With Push Pin
21									RADIATOR, Engine Cooling
	05191249AA	1	J, T, U			EBA, ECN, ED3	DD9		
	05191286AB	1	J, T, U			ECD	DD7, DEF		
	68024164EA								Mopar Coolant - Diesel - 5.0L Bottle
	68024165EA								Mopar Coolant - Diesel - 208L Drum
	68004049AA	1	J, T, U			EBA, ECN, ED3	DD7, DEF		[HAA]
		1	J, T, U			ECN, ED3	DAV, DAW		[HCA]
22									HOSE, Radiator Outlet
	05058174AB	1				ECD			
	05058490AA	1				ED3	DAV		[NHA]
23									FAN MODULE, Radiator Cooling
	05191253AA	1				EBA, ECN, ED3	DD9		
		1				EBA, ECN, ED3	DD7, DEF		
		1				ED3	DAV, DAW		
		1				ED3	DD7, DEF		
	68002661AA	1	J, T, U			ECN, ED3	DAW		[HAA]
		1	J, T, U			ECN, ED3	DAW		[HCA]
	68004051AA	1	J			ED3	DAV, DAW		[HAA]
		1	J			ED3	DAV, DAW		[HCA]
24									BRACKET, Cooling Module
	05115966AA	1	J, T, U			ECD			Upper Bracket With Radiator Isolator, Right
		1	J			ED3			Upper Bracket With Radiator Isolator, Right
		1	J, T, U			ECD			Upper, Right
	05115967AA	1	J, T, U			ECD			Upper Bracket With Radiator Isolator, Left
		1	J, T, U			ED3			Upper Bracket With Radiator Isolator, Left
25									BRACKET, Cooling Module

COMPASS/PATRIOT (MK)

SERIES	LINE	BODY	ENGINE	TRANSMISSION
H = HIGHLINE L = LOWLINE P = PREMIUM	J = JEEP - 4WD T = JEEP - 2WD	49 = HATCHBACK TYPE #2 74 = SPORT UTILITY 4-DR TYPE #4	ED3 = 2.4L 4 Cyl DOHC 16V Dual VVT Engine	DD7 = 5-Speed Manual T355 Transmission DEF = 6-Speed Manual Aisin BG6 Trans DAV = Continuously Variable Transmission DAW = Cont.Var. w/Off-Rd Crawl Ratio Trans

AR = use ase required - = Non illustrrated part

Radiator and Related Parts
Figure 7-110

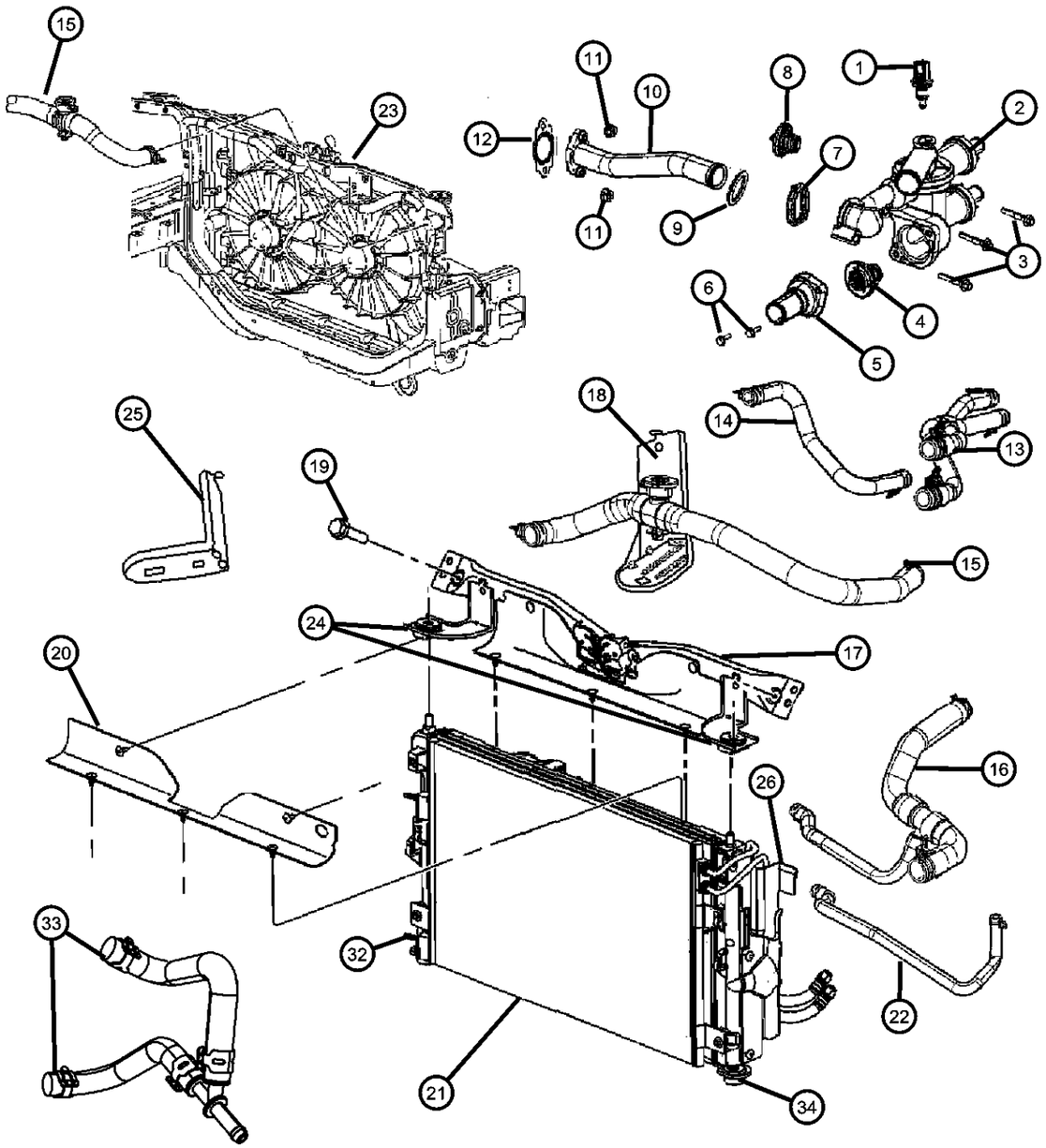

ITEM	PART NUMBER	QTY	LINE	SERIES	BODY	ENGINE	TRANS	TRIM	DESCRIPTION
	05115967AA	1	J, T, U			ECD			
		1	J, T, U			ECN, ED3			
26									SEAL, Radiator
	05191255AA	1				ECN, ED3	DAV, DAW		[HAA], Left
		1				ECN, ED3	DAV, DAW		[HCA], Left
	05191256AA	1				ECN, ED3	DAV, DAW		[HAA], Right
		1				ECN, ED3	DAV, DAW		[HCA], Right
	05191257AA	1				ECN, ED3	DAV, DAW		[HAA], Lower
		1				ECN, ED3	DAV, DAW		[HCA], Lower
-27	52079632AA	1				ECD			CLAMP, Hose, 16X15
-28									CLAMP, Hose, 19X15
	52029091AA	1				ED3	DAV		[NHA]
		1				ED3	DAV		
-29	06502017	2				ECD			CLAMP, Hose, 24X15
-30	04809146AA	1				ECD			CLAMP, Hose, 42X15
-31									CLAMP, Hose, 44X15
	04401438	2				ED3	DD7		
		2				ED3	DAV		
		1	J			ECD			
32									DRAINCOCK, Radiator
	52028466AB	1	J, T, U			EBA, ECN, ED3	DD7, DEF		
		1	J, T, U			EBA, ECN, ED3	DD9		
33	05162004AA	1	J, T, U			ECD			HOSE, Coolant, Hose and Claim Assy
34									ISOLATOR, Radiator, Lower
	68020480AA	2	J, T, U			ECD	DD7, DEF		
		2	J, T, U			EBA, ECN, ED3	DD7, DEF		
		2	J, T, U			EBA, ECN, ED3	DD9		
		2	J, T, U			ECN, ED3	DAV, DAW		
-35									CONDENSER, Air Conditioning

COMPASS/PATRIOT (MK)

SERIES	LINE	BODY	ENGINE	TRANSMISSION
H = HIGHLINE L = LOWLINE P = PREMIUM	J = JEEP - 4WD T = JEEP - 2WD	49 = HATCHBACK TYPE #2 74 = SPORT UTILITY 4-DR TYPE #4	ED3 = 2.4L 4 Cyl DOHC 16V Dual VVT Engine	DD7 = 5-Speed Manual T355 Transmission DEF = 6-Speed Manual Aisin BG6 Trans DAV = Continuously Variable Transmission DAW = Cont.Var. w/Off-Rd Crawl Ratio Trans

AR = use ase required - = Non illustrrated part

Radiator and Related Parts
Figure 7-110

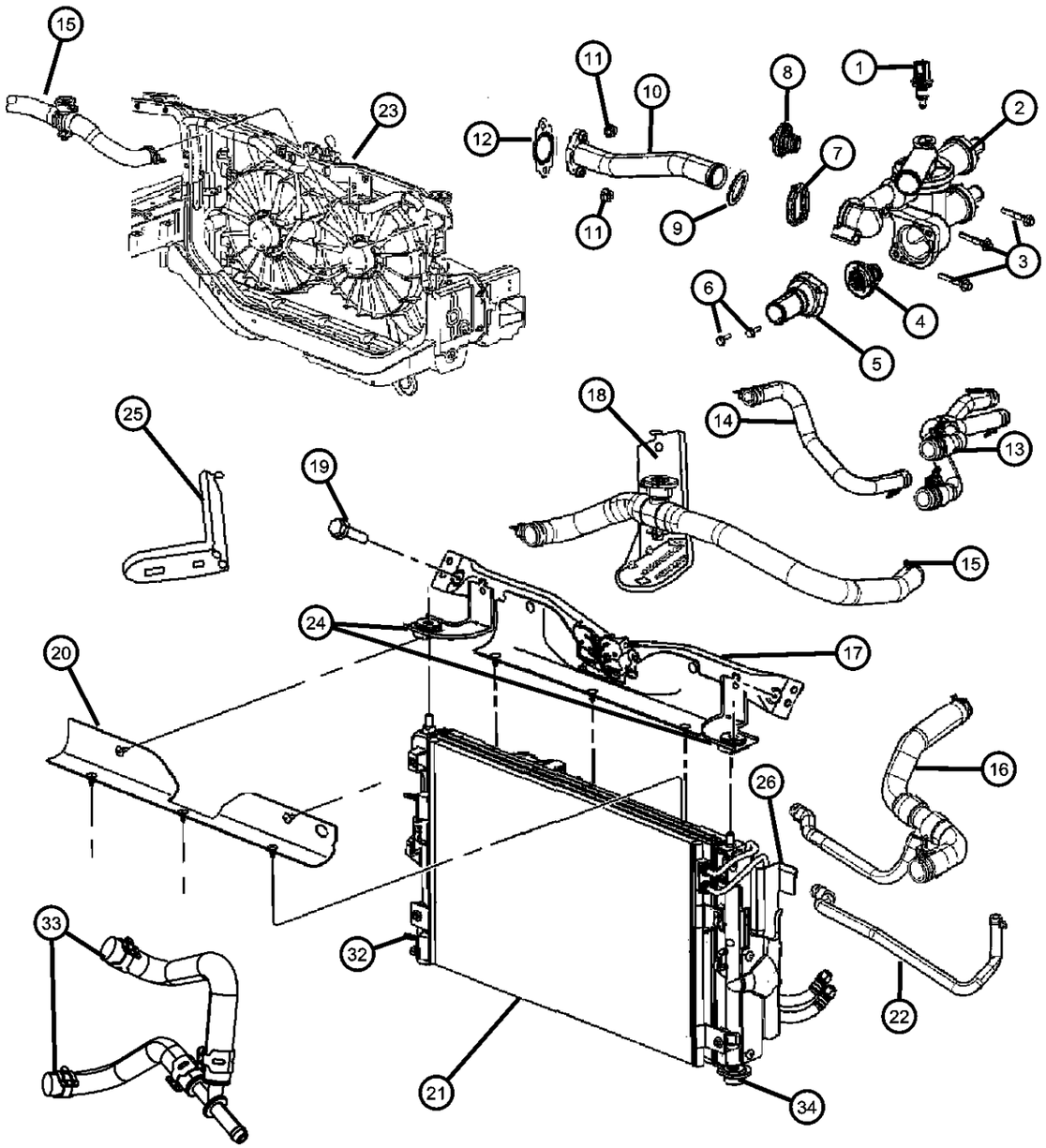

ITEM	PART NUMBER	QTY	LINE	SERIES	BODY	ENGINE	TRANS	TRIM	DESCRIPTION
	05191252AA	1	J, T, U			EBA, ECN, ED3	DD9		
	05191287AA	1	J, T, U			ECD	DD9		
	68004052AA	1	J, T, U			EBA, ECN, ED3	DD7, DEF		
	68004296AA	1	J, T, U			ECN, ED3	DAW		

COMPASS/PATRIOT (MK)

SERIES	LINE	BODY	ENGINE	TRANSMISSION
H = HIGHLINE L = LOWLINE P = PREMIUM	J = JEEP - 4WD T = JEEP - 2WD	49 = HATCHBACK TYPE #2 74 = SPORT UTILITY 4-DR TYPE #4	ED3 = 2.4L 4 Cyl DOHC 16V Dual VVT Engine	DD7 = 5-Speed Manual T355 Transmission DEF = 6-Speed Manual Aisin BG6 Trans DAV = Continuously Variable Transmission DAW = Cont.Var. w/Off-Rd Crawl Ratio Trans

AR = use ase required - = Non illustrrated part

Charge Air Cooler
Figure 7-120

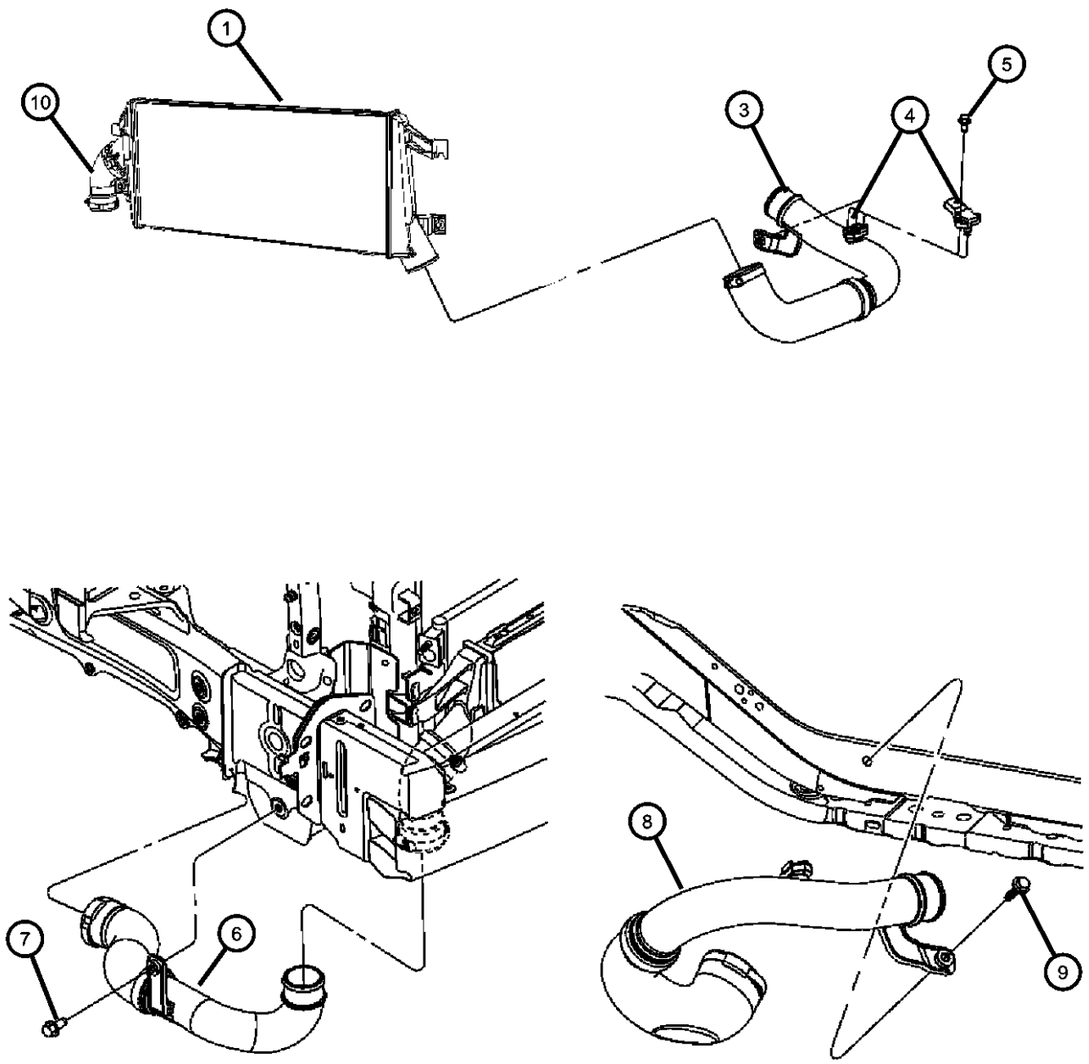

ITEM	PART NUMBER	QTY	LINE	SERIES	BODY	ENGINE	TRANS	TRIM	DESCRIPTION
1	05191288AB	1	J, T, U			ECD	DD7, DEF		COOLER, Charge Air
-2									SEAL, CHARGE AIR COOLER, Lower
	68002664AA	1	J, T, U			ECD	DD9		[HAA]
		1	J			ECD	DD7, DEF		[HAA]
		1	J			ECD	DD7, DEF		[HCA]
3									HOSE, Intercooler Outlet
	04891699AB	1				ECD			
	04891705AB	1				ECD			[X87]
4	05149001AA	1				ECD			SENSOR, Fuel Temperature, On Outlet Hose
5	06104390AA	1				ECD			SCREW AND WASHER, Hex Head, M8x1.25x35, Fasten Sensor
6	04891698AB	1				ECD			HOSE, Intercooler Inlet
7	06104390AA	1				ECD			SCREW AND WASHER, Hex Head, M8x1.25x35, Charge Air Cooler Hose To Rail
8	04891699AC	1	J, T, U			ECD			HOSE, Intercooler Outlet
9	06104390AA	1				ECD			SCREW AND WASHER, Hex Head, M8x1.25x35, Charge Air Cooler Outlet To Rail
10									HOSE, Intercooler Inlet
	04891697AB	1	J, T, U			ECD			[X87]
	04891788AA	1	J			ECD	DD7, DEF		[HCA]
		1	J			ECD	DD7, DEF		[HAA]

COMPASS/PATRIOT (MK)

SERIES	LINE	BODY	ENGINE	TRANSMISSION
H = HIGHLINE L = LOWLINE P = PREMIUM	J = JEEP - 4WD T = JEEP - 2WD	49 = HATCHBACK TYPE #2 74 = SPORT UTILITY 4-DR TYPE #4	ED3 = 2.4L 4 Cyl DOHC 16V Dual VVT Engine	DD7 = 5-Speed Manual T355 Transmission DEF = 6-Speed Manual Aisin BG6 Trans DAV = Continuously Variable Transmission DAW = Cont.Var. w/Off-Rd Crawl Ratio Trans

Water Pump [2.4L ED3]
Figure 7-210

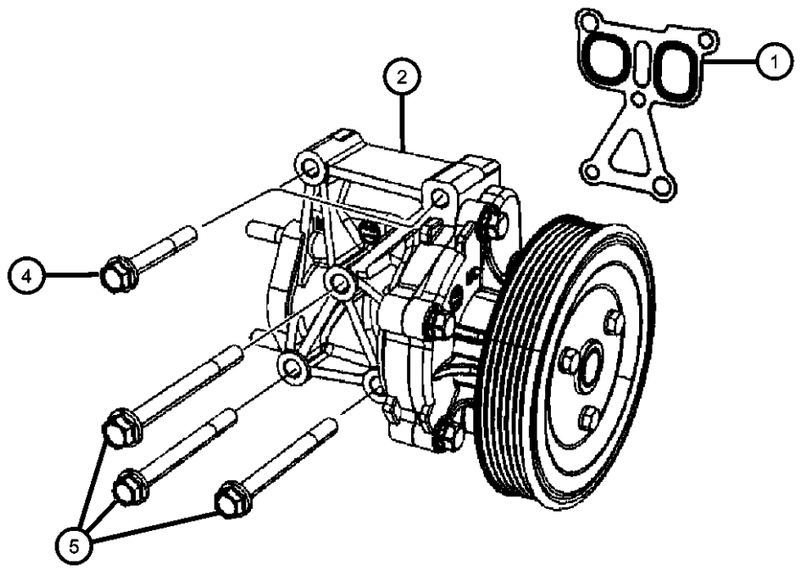

ITEM	PART NUMBER	QTY	LINE	SERIES	BODY	ENGINE	TRANS	TRIM	DESCRIPTION
NOTE: Sales Codes: [ED3] = 2.4L 4 CYL DOHC 16V Dual VVT Engine									
1	04884696AA	1				ED3			GASKET, Water Pump Outlet
2	MN187244	1				ED3			PUMP, Water
-3	04884697AB	1				ED3			TUBE, Water Inlet
4									BOLT
	1140308553	2	J			ED3			
		2	J, T, U			ED3			
5									BOLT
	1140308803	3				ED3			
		3	J			ED3			

COMPASS/PATRIOT (MK)

SERIES	LINE	BODY	ENGINE	TRANSMISSION
H = HIGHLINE L = LOWLINE P = PREMIUM	J = JEEP - 4WD T = JEEP - 2WD	49 = HATCHBACK TYPE #2 74 = SPORT UTILITY 4-DR TYPE #4	ED3 = 2.4L 4 Cyl DOHC 16V Dual VVT Engine	DD7 = 5-Speed Manual T355 Transmission DEF = 6-Speed Manual Aisin BG6 Trans DAV = Continuously Variable Transmission DAW = Cont.Var. w/Off-Rd Crawl Ratio Trans

Water Pump And Plumbing 2.0L Diesel [ECD]
Figure 7-220

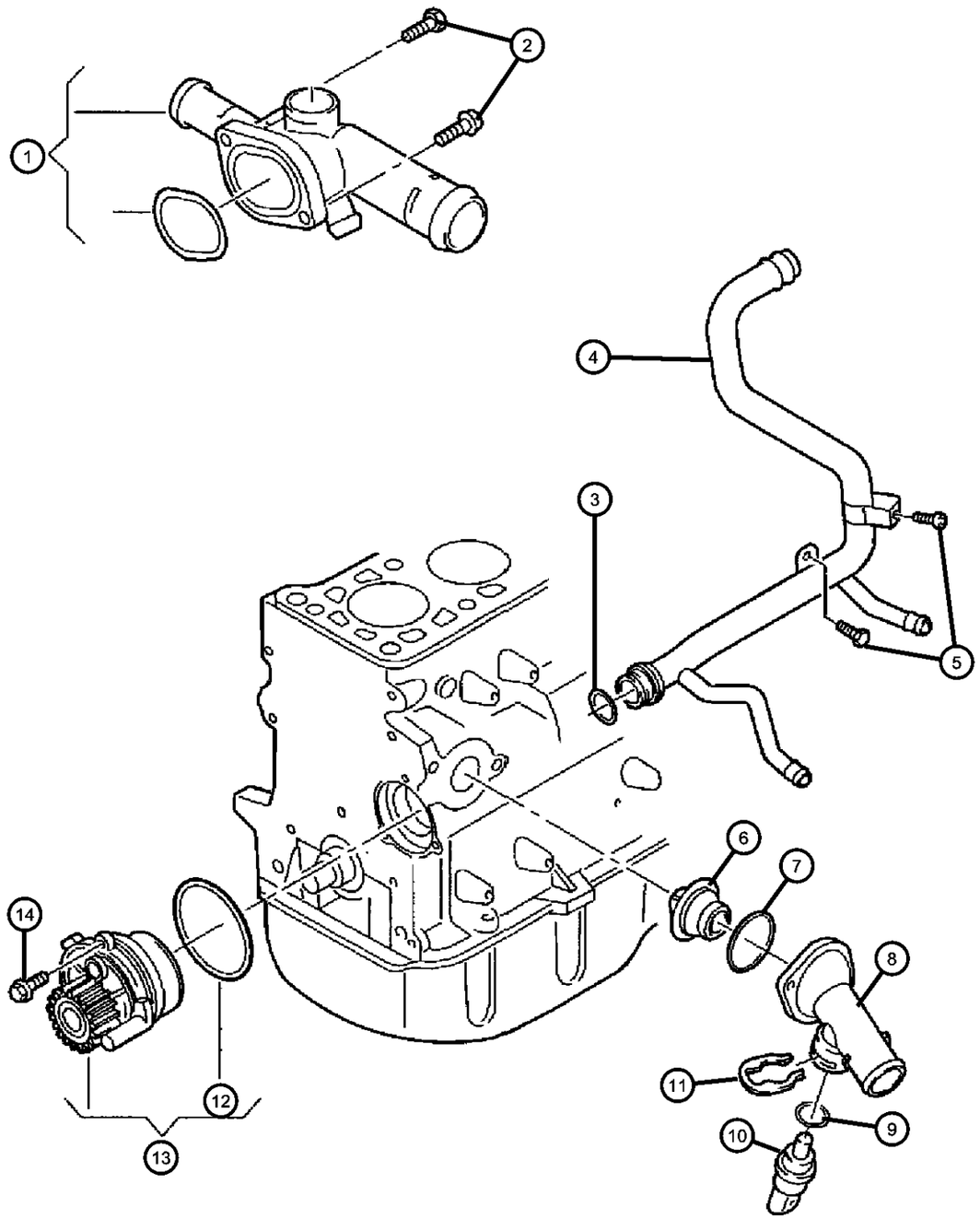

ITEM	PART NUMBER	QTY	LINE	SERIES	BODY	ENGINE	TRANS	TRIM	DESCRIPTION
1	68001300AA	1	J, T, U			ECD			HOUSING, Water Outlet
2	68001300AA	1							BOLT, (NOT SERVICED)
3									SEAL
	55276821AA	2							
		2	J, T, U						
4	68000811AA	1				ECD			TUBE, Heater
5	68000811AA	1							BOLT, (NOT SERVICED)
6	68000800AA	1				ECD			THERMOSTAT, Engine Coolant
7	68000800AA	1							SEAL, (NOT SERVICED)
8	68000804AA	1				ECD			HOUSING, Thermostat
9	68001449AA	1	J, T, U			ECD			O RING
10	68001313AA	1	J, T, U			ECD			SENSOR, Temperature
11	68001423AA	1	J, T, U			ECD			CLIP
12	68001448AA	1	J, T, U			ECD			O RING
13	68000693AA	1				ECD			PUMP, Water
14	68001543AA	7	J, T, U			ECD			BOLT

COMPASS/PATRIOT (MK)

SERIES	LINE	BODY	ENGINE	TRANSMISSION
H = HIGHLINE L = LOWLINE P = PREMIUM	J = JEEP - 4WD T = JEEP - 2WD	49 = HATCHBACK TYPE #2 74 = SPORT UTILITY 4-DR TYPE #4	ED3 = 2.4L 4 Cyl DOHC 16V Dual VVT Engine	DD7 = 5-Speed Manual T355 Transmission DEF = 6-Speed Manual Aisin BG6 Trans DAV = Continuously Variable Transmission DAW = Cont.Var. w/Off-Rd Crawl Ratio Trans

AR = use ase required - = Non illustrrated part

Coolant Reserve Tank 2.0L [ECD] Diesel
Figure 7-310

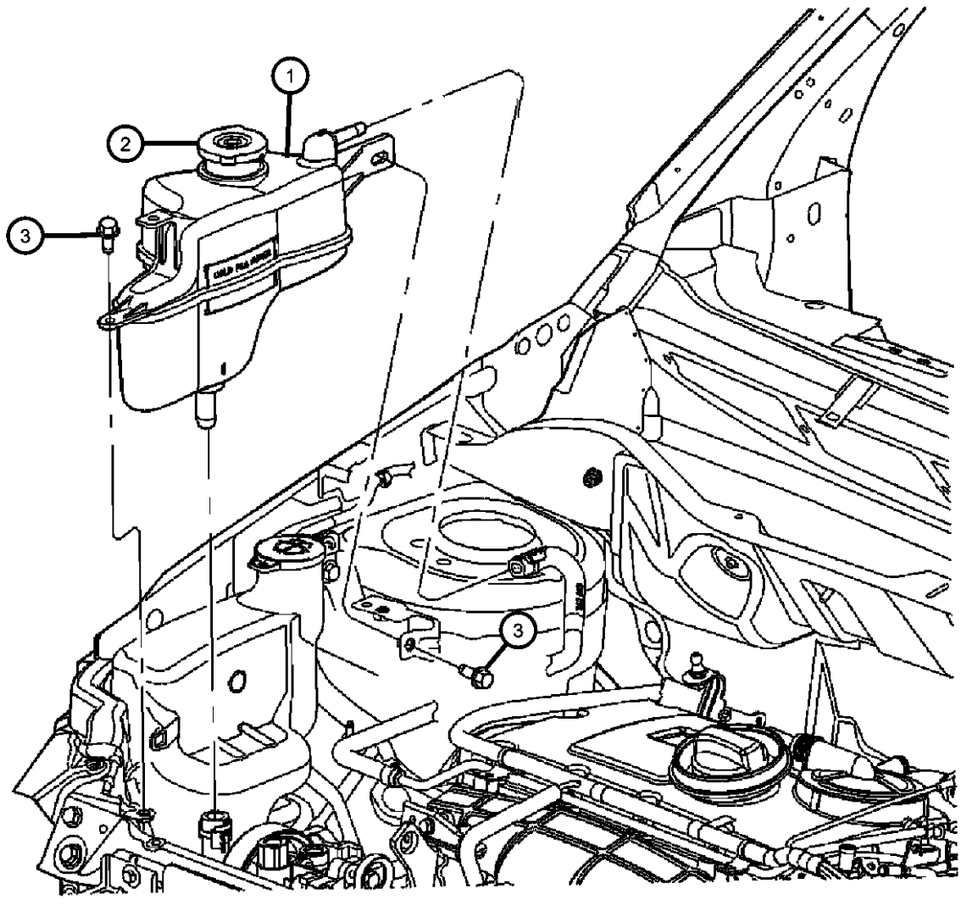

ITEM	PART NUMBER	QTY	LINE	SERIES	BODY	ENGINE	TRANS	TRIM	DESCRIPTION
Sales Codes:									
[ECB] = 2.0L 4 CYL DOHC DIESEL 16V ENGINE									
1	05058157AC	1				ECD			BOTTLE, Coolant Recovery
2	55111074AA	1	J, T, U			ED3			CAP, Coolant Reserve Tank
3									SCREW, M8x1.25x25
	06104386AA	1	J						
		1	J, T, U						
-4	05058295AB	1				ECD			HOSE, Coolant Bottle Supply
-5	05058296AC	1				ECD			HOSE, Coolant Bottle Return

COMPASS/PATRIOT (MK)

SERIES	LINE	BODY	ENGINE	TRANSMISSION
H = HIGHLINE L = LOWLINE P = PREMIUM	J = JEEP - 4WD T = JEEP - 2WD	49 = HATCHBACK TYPE #2 74 = SPORT UTILITY 4-DR TYPE #4	ED3 = 2.4L 4 Cyl DOHC 16V Dual VVT Engine	DD7 = 5-Speed Manual T355 Transmission DEF = 6-Speed Manual Aisin BG6 Trans DAV = Continuously Variable Transmission DAW = Cont.Var. w/Off-Rd Crawl Ratio Trans

Coolant Reserve Tank Gas Engines
Figure 7-320

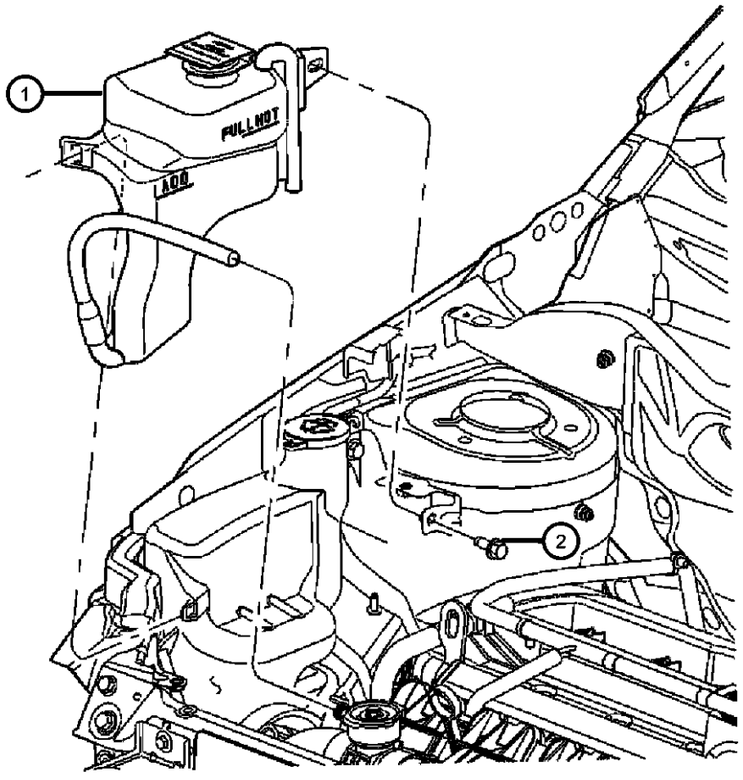

ITEM	PART NUMBER	QTY	LINE	SERIES	BODY	ENGINE	TRANS	TRIM	DESCRIPTION
NOTES: Sales Codes: [ED3] = 2.4L 4 CYL DOHC 16V DUAL VVT ENGINE									
1	05058156AE	1				ED3			BOTTLE, Coolant Recovery, Cap and Hose Serviced With Bottle Only
2	06104386AA	1	J, T, U						SCREW, M8x1.25x25

COMPASS/PATRIOT (MK)

SERIES	LINE	BODY	ENGINE	TRANSMISSION
H = HIGHLINE L = LOWLINE P = PREMIUM	J = JEEP - 4WD T = JEEP - 2WD	49 = HATCHBACK TYPE #2 74 = SPORT UTILITY 4-DR TYPE #4	ED3 = 2.4L 4 Cyl DOHC 16V Dual VVT Engine	DD7 = 5-Speed Manual T355 Transmission DEF = 6-Speed Manual Aisin BG6 Trans DAV = Continuously Variable Transmission DAW = Cont.Var. w/Off-Rd Crawl Ratio Trans

Pulleys and Related Parts [2.4L ED3]
Figure 7-410

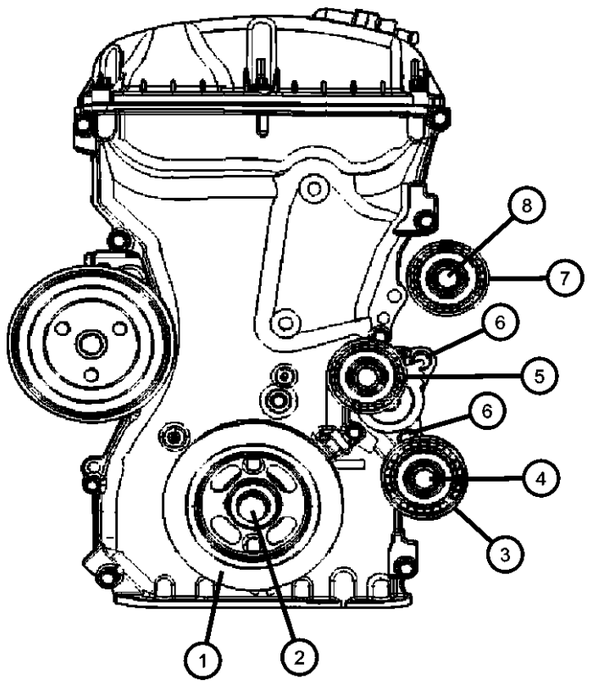

ITEM	PART NUMBER	QTY	LINE	SERIES	BODY	ENGINE	TRANS	TRIM	DESCRIPTION
Sales Codes:									
[ED3] = 2.4L Gas Engine									
1	2312425000	1				ED3			DAMPER, Crankshaft
2									BOLT
	1101A022	1				ED3			
		1	J			ED3			
3									PULLEY, Idler
	04891596AB	1	J			ED3			
		1	J, T, U			ECN, ED3			
4									BOLT
	06508391AA	1				ED3, ED4			
		1	J			ED3			
5									TENSIONER, Belt
	04891595AB	1	U, J, T			ECN, ED3			
		1				ED3			
6	06104035AA	1				ED3			SCREW
7	04891797AA	1				ED3, ED4			PULLEY, Idler
8									BOLT
	06508391AA	1				ED3, ED4			
		1	J			ED3			

COMPASS/PATRIOT (MK)

SERIES	LINE	BODY	ENGINE	TRANSMISSION
H = HIGHLINE L = LOWLINE P = PREMIUM	J = JEEP - 4WD T = JEEP - 2WD	49 = HATCHBACK TYPE #2 74 = SPORT UTILITY 4-DR TYPE #4	ED3 = 2.4L 4 Cyl DOHC 16V Dual VVT Engine	DD7 = 5-Speed Manual T355 Transmission DEF = 6-Speed Manual Aisin BG6 Trans DAV = Continuously Variable Transmission DAW = Cont.Var. w/Off-Rd Crawl Ratio Trans

Pulleys and Related Parts 2.0L [ECD] Diesel
Figure 7-420

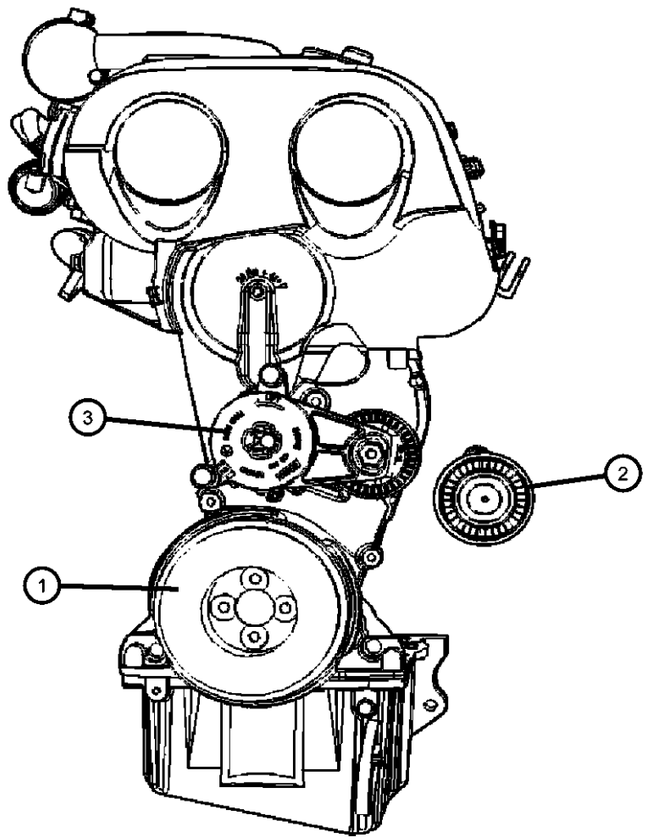

ITEM	PART NUMBER	QTY	LINE	SERIES	BODY	ENGINE	TRANS	TRIM	DESCRIPTION
Sales Code:									
[ECD] = 2.0L Diesel Engine									
1	68001304AA	1	J, T, U			ECD			DAMPER, Engine Vibration
2	04891660AA	1	J, T, U			ECD			PULLEY, Idler
3	04891659AA	1	J, T, U			ECD			TENSIONER, Belt

COMPASS/PATRIOT (MK)

SERIES	LINE	BODY	ENGINE	TRANSMISSION
H = HIGHLINE L = LOWLINE P = PREMIUM	J = JEEP - 4WD T = JEEP - 2WD	49 = HATCHBACK TYPE #2 74 = SPORT UTILITY 4-DR TYPE #4	ED3 = 2.4L 4 Cyl DOHC 16V Dual VVT Engine	DD7 = 5-Speed Manual T355 Transmission DEF = 6-Speed Manual Aisin BG6 Trans DAV = Continuously Variable Transmission DAW = Cont.Var. w/Off-Rd Crawl Ratio Trans

Belts
Figure 7-510

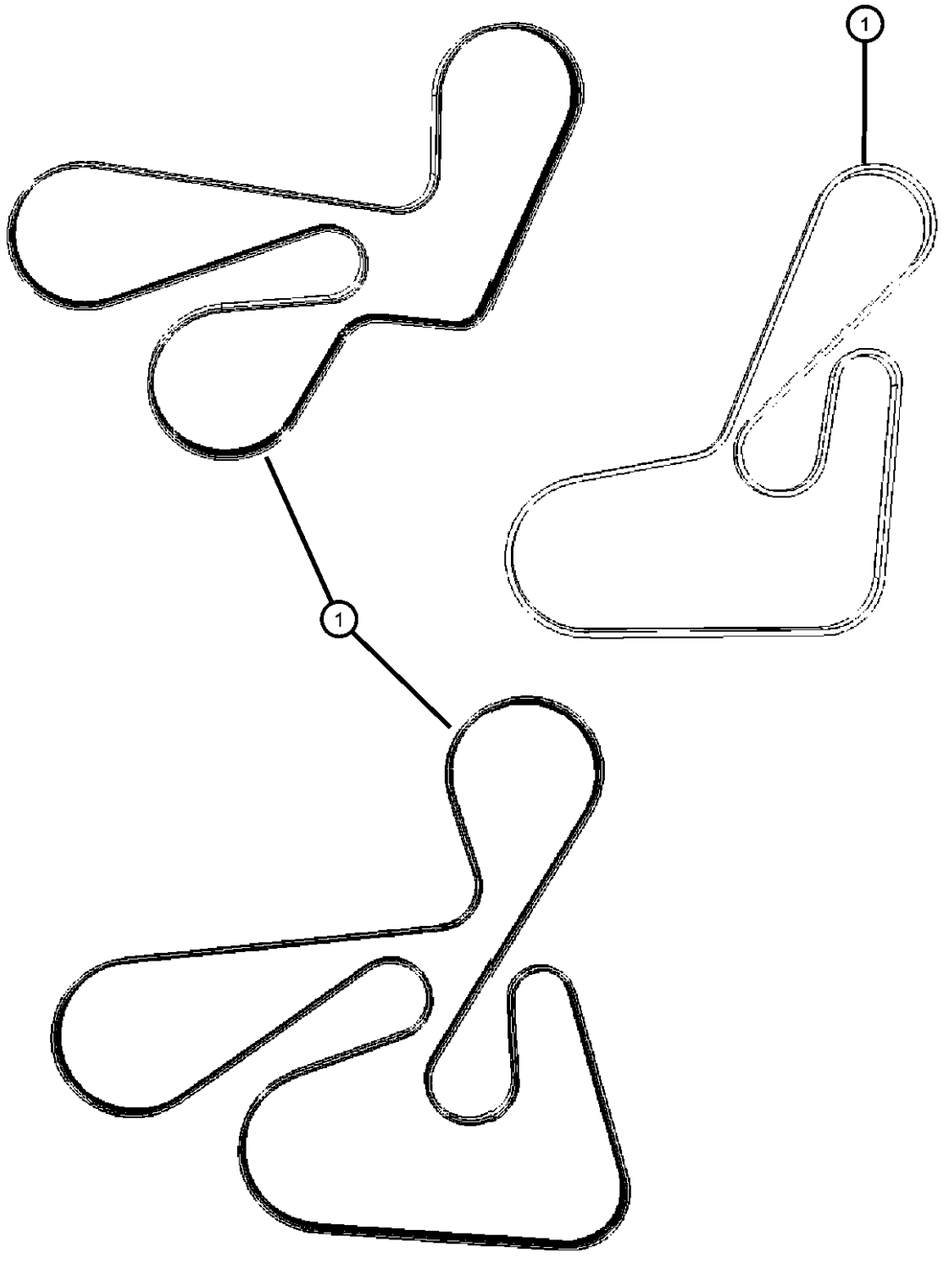

ITEM	PART NUMBER	QTY	LINE	SERIES	BODY	ENGINE	TRANS	TRIM	DESCRIPTION
Sales Codes:									
[ECN] = 2.0L Gas Engine [ED3] = 2.4L Gas Engine [ECD] = 2.0L Diesel Engine									
1									BELT, Accessory Drive
	04891692AB	1				ED3, ED4			
	04891598AB	1				ED3			
	04891661AA	1				ECD			

COMPASS/PATRIOT (MK)

SERIES	LINE	BODY	ENGINE	TRANSMISSION
H = HIGHLINE L = LOWLINE P = PREMIUM	J = JEEP - 4WD T = JEEP - 2WD	49 = HATCHBACK TYPE #2 74 = SPORT UTILITY 4-DR TYPE #4	ED3 = 2.4L 4 Cyl DOHC 16V Dual VVT Engine	DD7 = 5-Speed Manual T355 Transmission DEF = 6-Speed Manual Aisin BG6 Trans DAV = Continuously Variable Transmission DAW = Cont.Var. w/Off-Rd Crawl Ratio Trans

Lines, Oil Cooler
Figure 7-610

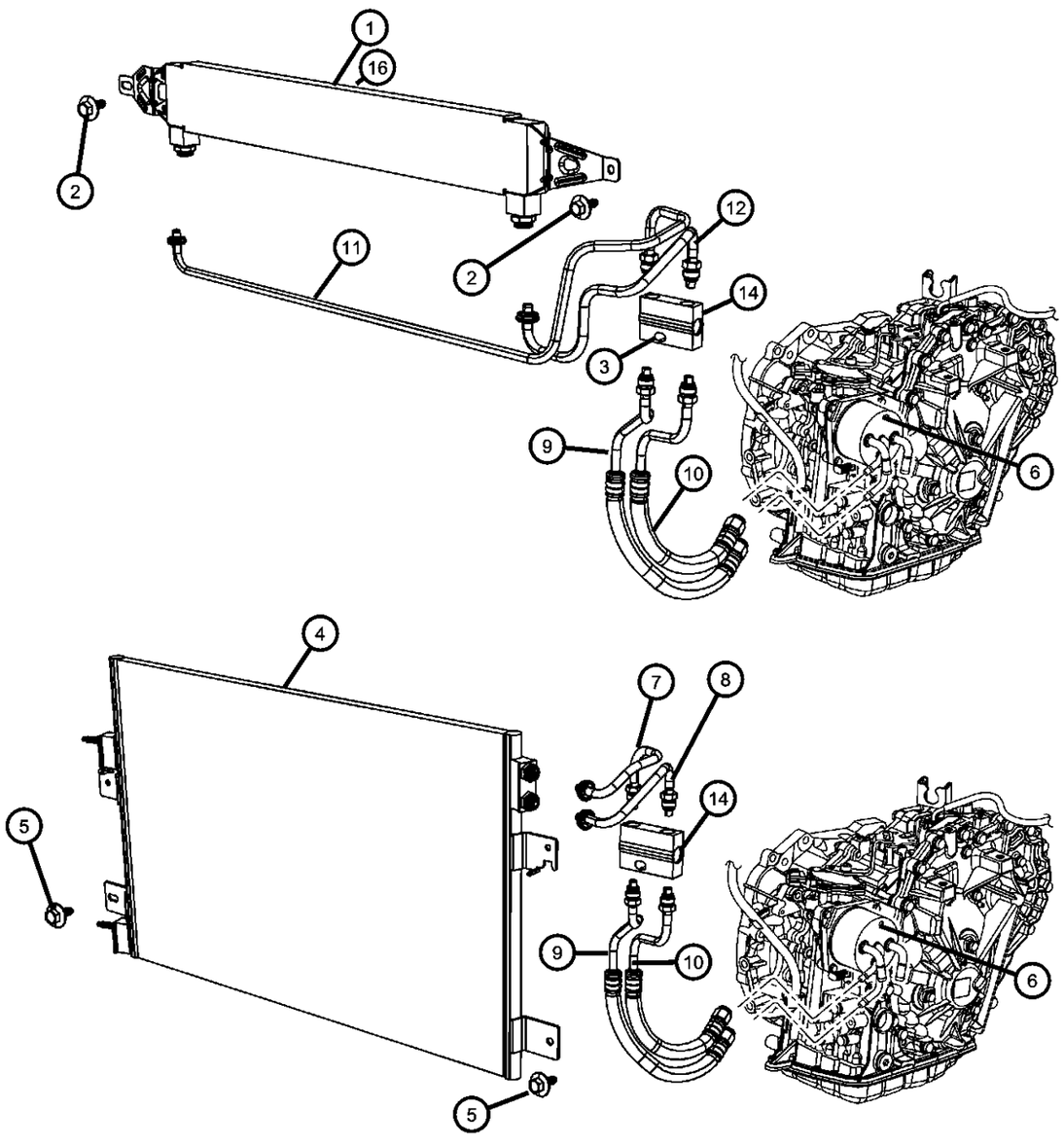

ITEM	PART NUMBER	QTY	LINE	SERIES	BODY	ENGINE	TRANS	TRIM	DESCRIPTION
Sales Codes: [HCA] = Heater [HAA] = Heater with Air Conditioning [DAV]=Continuously Variable Transmission [ECN] = 2.0L Gas Engine [ED3] = 2.4L Gas Engine									
1	68004055AA	1	J, T, U			ECN, ED3	DAV, DAW		COOLER, Auxiliary Trans. Oil
2	05191254AA	2				ECN, ED3	DAV, DAW		SCREW, M6x1.0
3	05191284AA	1				ECN, ED3	DAV, DAW		SCREW
4	68004053AA	1	J, T, U			ECN, ED3	DAV, DAW		COOLER, Condenser and Aux TOC
5	05191254AA	2				EBA, ECN, ED3	DD9		SCREW, M6x1.0
6									COOLER, Transmission Oil
	68004297AA	1	J, T, U			ECN, ED3	DAW		
	68025160AA	1	J, T, U			ECN	DAV		
		1	J, U			ED3	DAV		
7	68021175AA	1	J, T, U			ECN, ED3	DAV		TUBE, Transmission By-Pass Valve
8	68021172AA	1	J, T, U			ECN, ED3	DAW		TUBE, Transmission By-Pass Valve
9	68021174AA	1	J, T, U			ECN, ED3	DAW		TUBE, Transmission By-Pass Valve
10									TUBE, Transmission By-Pass Valve
	68021173AA	1	J, T, U			ECN, ED3	DAW		
		1	J, T, U			ECN, ED3	DAV		
11	68021176AA	1	J, T, U			ECN, ED3	DAV		TUBE, Transmission By-Pass Valve
12	68021177AA	1	J, T, U			ECN, ED3	DAV		TUBE, Transmission By-Pass Valve
-13	68021178AA	1	J, T, U			ECN, ED3	DAW		TUBE, Transmission By-Pass Valve
14									VALVE, Transmission By-Pass
	68021179AA	1	J, T, U			ECN, ED3	DAW		
		1	J, T, U			ECN, ED3	DAW		[HAC]
		1	J, T, U			ECN, ED3	DAV		[HAA]
-15									O RING, Transmission By-Pass Valve
	68021180AA	4	J, T, U			ECN, ED3	DAW		

COMPASS/PATRIOT (MK)

SERIES	LINE	BODY	ENGINE	TRANSMISSION
H = HIGHLINE L = LOWLINE P = PREMIUM	J = JEEP - 4WD T = JEEP - 2WD	49 = HATCHBACK TYPE #2 74 = SPORT UTILITY 4-DR TYPE #4	ED3 = 2.4L 4 Cyl DOHC 16V Dual VVT Engine	DD7 = 5-Speed Manual T355 Transmission DEF = 6-Speed Manual Aisin BG6 Trans DAV = Continuously Variable Transmission DAW = Cont.Var. w/Off-Rd Crawl Ratio Trans

Lines, Oil Cooler
Figure 7-610

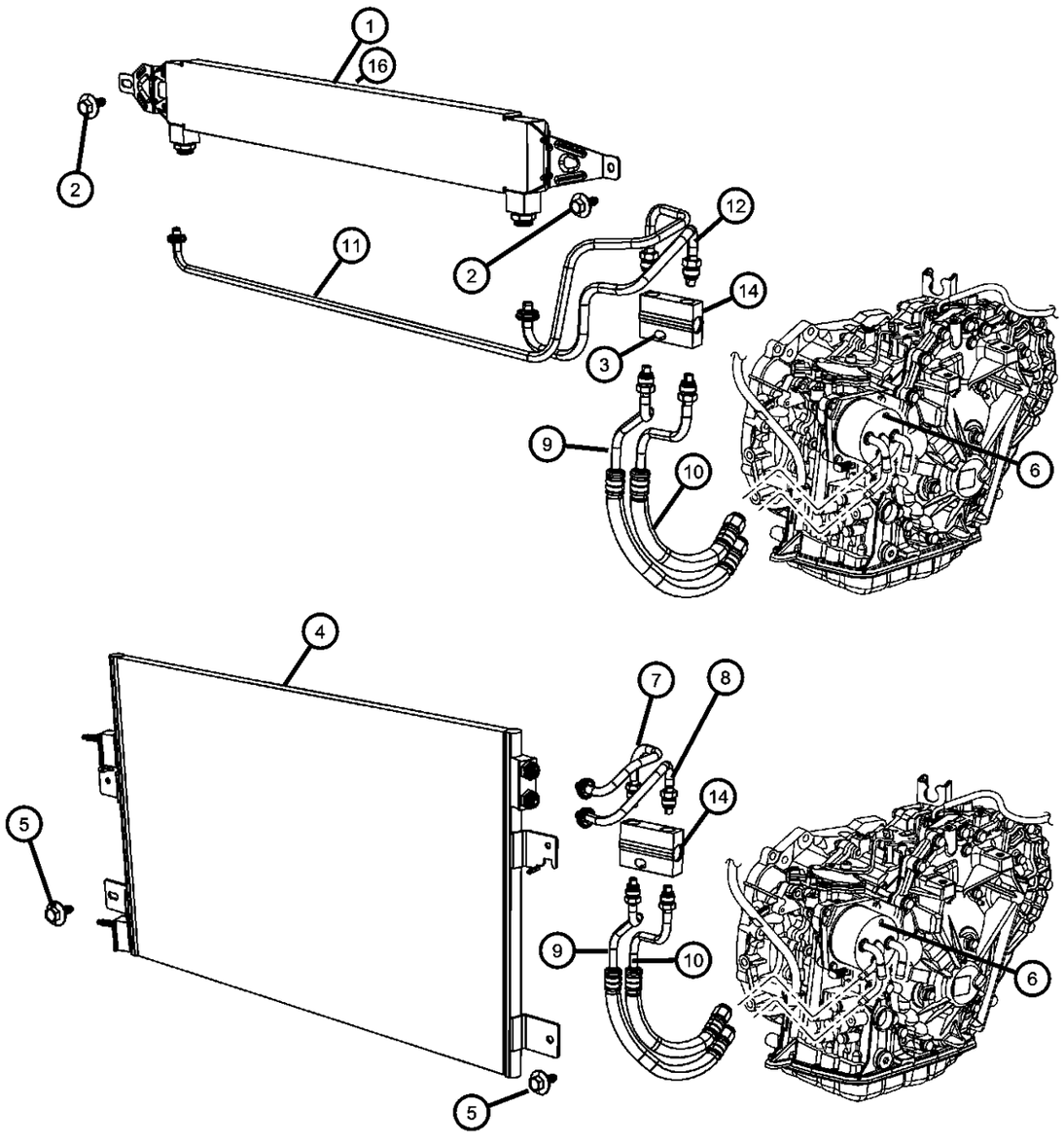

ITEM	PART NUMBER	QTY	LINE	SERIES	BODY	ENGINE	TRANS	TRIM	DESCRIPTION
		4	J, T, U			ECN, ED3	DAW		[HCA]
		4	J, T, U			ECN, ED3	DAV		[HAA]
16									COOLER, Transmission Oil
	68025160AA	1	J, T, U			ECN	DAV		
		1	J, U			ED3	DAV		
		1	T			ED3	DAV		

COMPASS/PATRIOT (MK)

SERIES	LINE	BODY	ENGINE	TRANSMISSION
H = HIGHLINE L = LOWLINE P = PREMIUM	J = JEEP - 4WD T = JEEP - 2WD	49 = HATCHBACK TYPE #2 74 = SPORT UTILITY 4-DR TYPE #4	ED3 = 2.4L 4 Cyl DOHC 16V Dual VVT Engine	DD7 = 5-Speed Manual T355 Transmission DEF = 6-Speed Manual Aisin BG6 Trans DAV = Continuously Variable Transmission DAW = Cont.Var. w/Off-Rd Crawl Ratio Trans

Grille and Related Parts
Figure 7-710

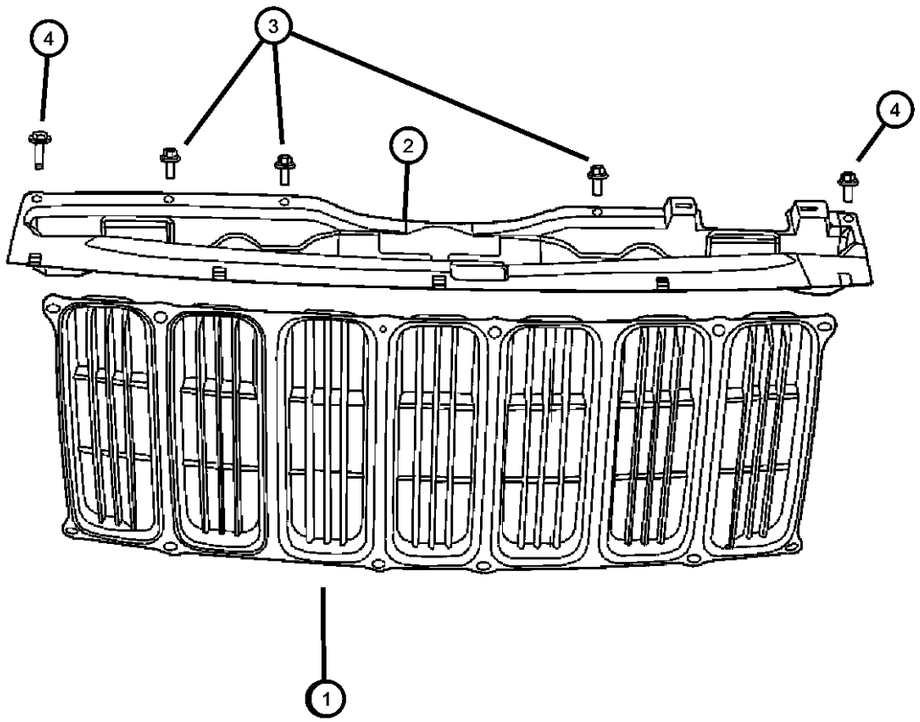

ITEM	PART NUMBER	QTY	LINE	SERIES	BODY	ENGINE	TRANS	TRIM	DESCRIPTION
1									GRILLE, Radiator
	0YS24XXXAA	1	J						Paint as Required
		1	J						Paint as Required [RH]
	05116363AA	1	J, T						
		1	J, T, U						Paint as Required [BM]
		1	J, T, U						Paint as Required [GJ]
		1	J, T, U						Paint as Required [JC]
		1	J, T, U						Paint as Required [RH]
		1	J, T, U						Paint as Required [S2]
		1	J, T, U						Paint as Required [W1]
		1	J, T, U						Paint as Required [X8]
2									PANEL, Upper fascia
	05116333AA	1							[MCX]
		1	J, T, U						
3	06102142AA	4							SCREW, Hex Head, M6x1x15
4									SCREW AND WASHER, Hex Head, M6x1x25
	06105098AA	2							
		2	J						
-5	06036169AA	12	J, T						NUT, Spring Push On, .236, Grille to Fascia

COMPASS/PATRIOT (MK)

SERIES	LINE	BODY	ENGINE	TRANSMISSION
H = HIGHLINE L = LOWLINE P = PREMIUM	J = JEEP - 4WD T = JEEP - 2WD	49 = HATCHBACK TYPE #2 74 = SPORT UTILITY 4-DR TYPE #4	ED3 = 2.4L 4 Cyl DOHC 16V Dual VVT Engine	DD7 = 5-Speed Manual T355 Transmission DEF = 6-Speed Manual Aisin BG6 Trans DAV = Continuously Variable Transmission DAW = Cont.Var. w/Off-Rd Crawl Ratio Trans

AR = use ase required - = Non illustrrated part

Group - 8

Electrical

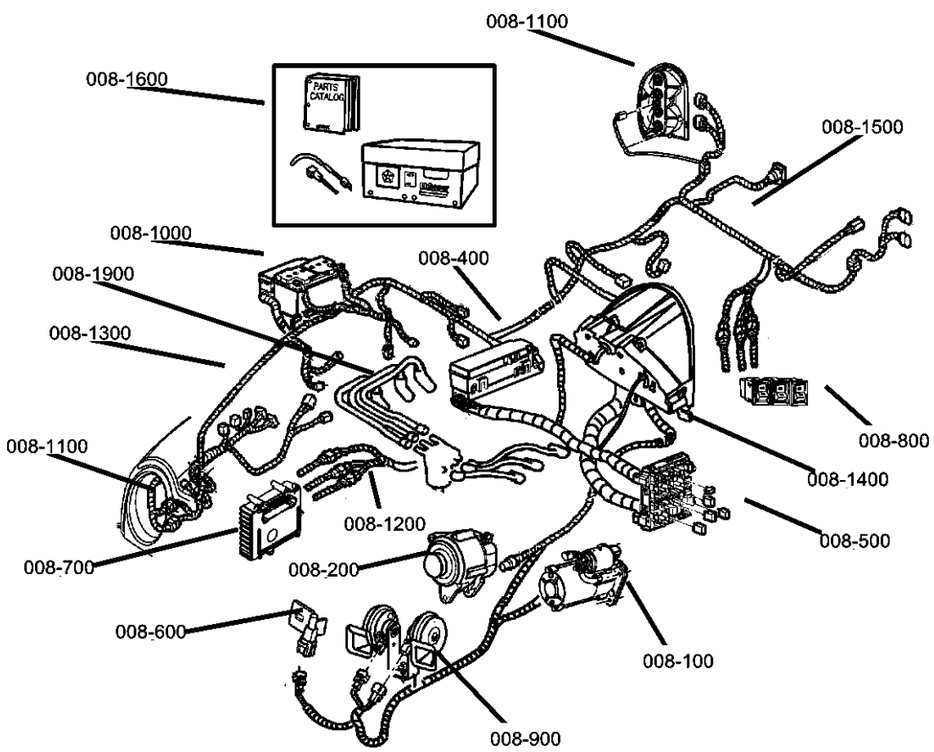

008-1700 Air Bag System 	**008-1900** Spark Plugs-Cables-Coils 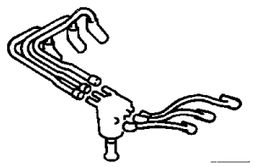	**008-200** Alternators 	**008-400** Modules 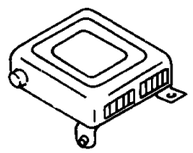
008-500 Relays 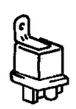	**008-600** Sensors 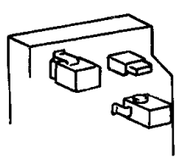	**008-700** Single Board Engine Controllers 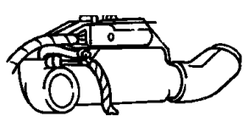	**008-800** Switches 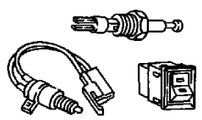
008-900 Horns 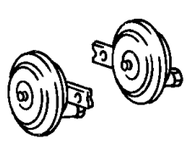			

008-100 Starters 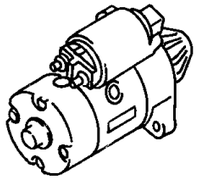	**008-1000** Battery Tray and Cables 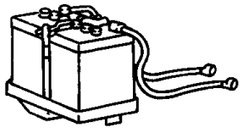	**008-1100** Lamps - Front, Rear and Courtesy 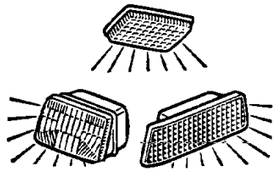	**008-1200** Wiring-Engine & Related Parts 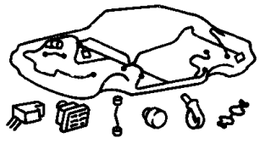
008-1300 Wiring-Headlamp to Dash 	**008-1400** Wiring-Instrument Panel WIRING INSTR. PANEL	**008-1500** Wiring-Body & Accessories 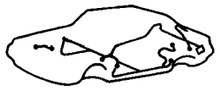	**008-1600** Wiring Repair WIRING REPAIR PKG.

Group - 8 Electrical

Illustration Title — Group-Fig. No.

Starters
Starter [2.4 ED3] ..... Fig. 8 - 110
Starter [2.0L ECD] Diesel ..... Fig. 8 - 120

Alternators
Alternator [2.4 ED3] ..... Fig. 8 - 210
Alternator [2.0,ECD] Diesel ..... Fig. 8 - 220

Modules
Modules, Electronic ..... Fig. 8 - 410

Relays
Fuses/Relays and Totally Integrated Power Module ..... Fig. 8 - 510
Relays and Totally Integrated Power Module Mounting ..... Fig. 8 - 520

Sensors
Sensors, Engine Gas ..... Fig. 8 - 610
Sensors Engine Diesel [ECD] ..... Fig. 8 - 615
Sensors Oxygen ..... Fig. 8 - 620
Sensors, Transmission ..... Fig. 8 - 630
Sensors, Body ..... Fig. 8 - 640

Single Board Engine Controllers
Powertrain Control Module ..... Fig. 8 - 710

Switches
Switches - Instrument Panel ..... Fig. 8 - 810
Switches - Power Train ..... Fig. 8 - 820
Switches - Body ..... Fig. 8 - 830

Horns
Horns ..... Fig. 8 - 910
Alarm System ..... Fig. 8 - 915

Battery Tray and Cables
Battery Tray And Cables ..... Fig. 8 - 1010

Lamps - Front, Rear and Courtesy
Lamps, Front ..... Fig. 8 - 1110
Lamps, Rear ..... Fig. 8 - 1120
Courtesy Lamps ..... Fig. 8 - 1130
Bulbs ..... Fig. 8 - 1140

Wiring-Engine & Related Parts
Wiring Powertrain and Transmission ..... Fig. 8 - 1210
Ground Straps ..... Fig. 8 - 1215

Wiring-Headlamp to Dash
Wiring Engine Compartment ..... Fig. 8 - 1305

Wiring-Instrument Panel
Wiring, Instrument Panel ..... Fig. 8 - 1410

Wiring-Body & Accessories
Wiring,Unibody ..... Fig. 8 - 1505
Wiring Doors and Liftgate ..... Fig. 8 - 1510

Wiring Repair
Wiring Repair Packages ..... Fig. 8 - 1610

Air Bag System
Air Bag Modules and Sensors ..... Fig. 8 - 1710
Airbags and Clocksprings ..... Fig. 8 - 1720

Spark Plugs-Cables-Coils
Spark Plugs, Cables, Coils ..... Fig. 8 - 1910
Glow Plugs ..... Fig. 8 - 1915

Starter [2.4 ED3]
Figure 8-110

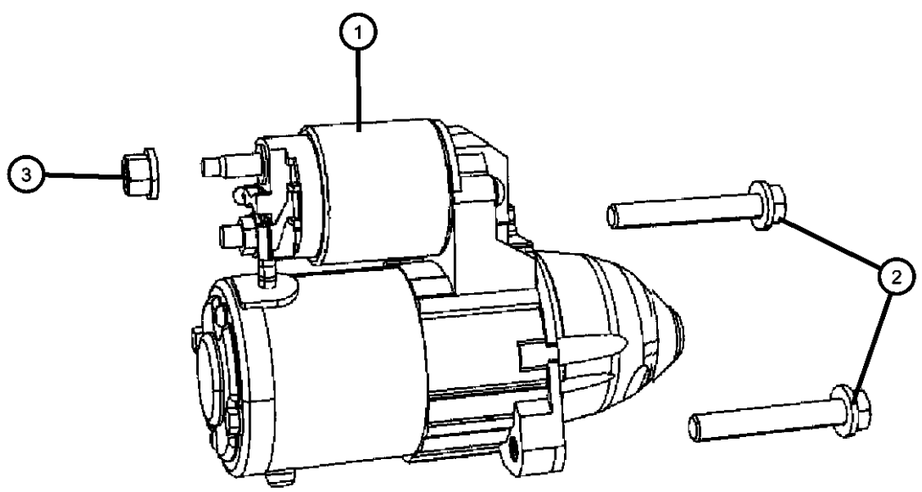

ITEM	PART NUMBER	QTY	LINE	SERIES	BODY	ENGINE	TRANS	TRIM	DESCRIPTION
1	05034555AA	1	J, T, U		49, 74	ED3			STARTER
2	06505488AA	2				ED3			SCREW AND WASHER, Hex
3	06101809	1				ECD, ED3			NUT AND WASHER, Hex, M8x1.25

COMPASS/PATRIOT (MK)

SERIES	LINE	BODY	ENGINE	TRANSMISSION
H = HIGHLINE L = LOWLINE P = PREMIUM	J = JEEP - 4WD T = JEEP - 2WD	49 = HATCHBACK TYPE #2 74 = SPORT UTILITY 4-DR TYPE #4	ED3 = 2.4L 4 Cyl DOHC 16V Dual VVT Engine	DD7 = 5-Speed Manual T355 Transmission DEF = 6-Speed Manual Aisin BG6 Trans DAV = Continuously Variable Transmission DAW = Cont.Var. w/Off-Rd Crawl Ratio Trans

Starter [2.0L ECD] Diesel
Figure 8-120

ITEM	PART NUMBER	QTY	LINE	SERIES	BODY	ENGINE	TRANS	TRIM	DESCRIPTION
1	06508522AA	3	J, T, U		49, 74	ECD			SCREW
2	05033440AA	1	J, T, U		49, 74	ECD			STARTERExport
3	06101809	1							NUT AND WASHER, Hex, M8x1.25, Battery Wiring Plus Terminal, Mounting
4	04801352AB	1	J, T, U		49, 74	ECD			WIRING, Starter

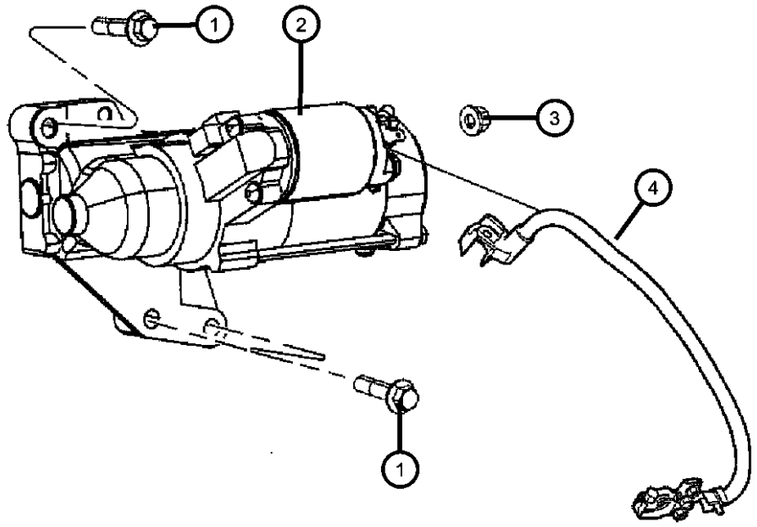

COMPASS/PATRIOT (MK)

SERIES	LINE	BODY	ENGINE	TRANSMISSION
H = HIGHLINE L = LOWLINE P = PREMIUM	J = JEEP - 4WD T = JEEP - 2WD	49 = HATCHBACK TYPE #2 74 = SPORT UTILITY 4-DR TYPE #4	ED3 = 2.4L 4 Cyl DOHC 16V Dual VVT Engine	DD7 = 5-Speed Manual T355 Transmission DEF = 6-Speed Manual Aisin BG6 Trans DAV = Continuously Variable Transmission DAW = Cont.Var. w/Off-Rd Crawl Ratio Trans

Alternator [2.4 ED3]
Figure 8-210

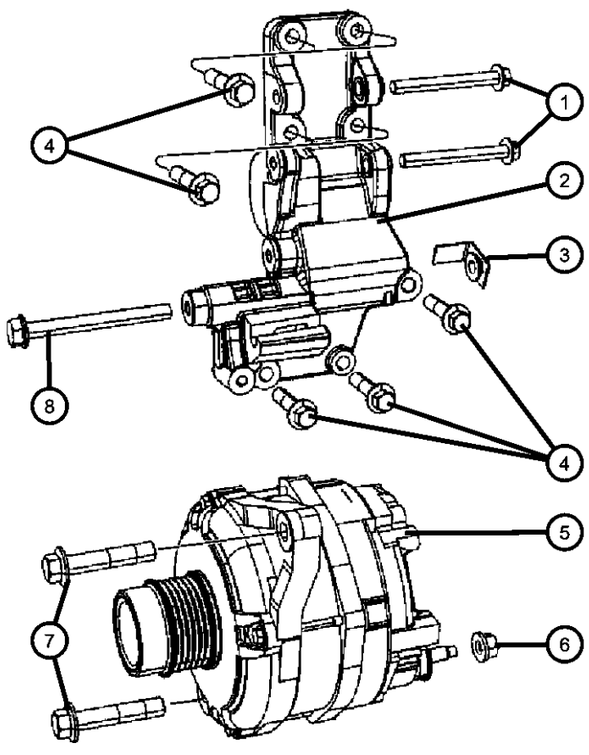

ITEM	PART NUMBER	QTY	LINE	SERIES	BODY	ENGINE	TRANS	TRIM	DESCRIPTION
1	06508278AA	1				ED3, ED4			BOLT
2	04891592AA	1	J, T, U		49, 74	ED3, ED4			BRACKET, Accessory Mount
3	06502987	1	J, T, U		49, 74	ED3			NUT AND RETAINER, Hex Flange Locking, M10 x 1.50
4	06508246AA	7				ED3			BOLT
5									ALTERNATOR
	04801323AC	1	J, T, U		49, 74	ED3			[BAN]
	04801477AA	1	J, T, U		49, 74	ED3			[BAE]
6	06101809	1							NUT AND WASHER, Hex, M8x1.25, Alternator Wiring Plus Terminal
7	06508278AA	1				ED3, ED4			BOLT
8	06104227AA	1				ED3			BOLT
-9	04891743AA	1	J, T, U		49, 74	ED3			CAP, Alternator Pulley

COMPASS/PATRIOT (MK)

SERIES	LINE	BODY	ENGINE	TRANSMISSION
H = HIGHLINE L = LOWLINE P = PREMIUM	J = JEEP - 4WD T = JEEP - 2WD	49 = HATCHBACK TYPE #2 74 = SPORT UTILITY 4-DR TYPE #4	ED3 = 2.4L 4 Cyl DOHC 16V Dual VVT Engine	DD7 = 5-Speed Manual T355 Transmission DEF = 6-Speed Manual Aisin BG6 Trans DAV = Continuously Variable Transmission DAW = Cont.Var. w/Off-Rd Crawl Ratio Trans

Alternator [2.0,ECD] Diesel
Figure 8-220

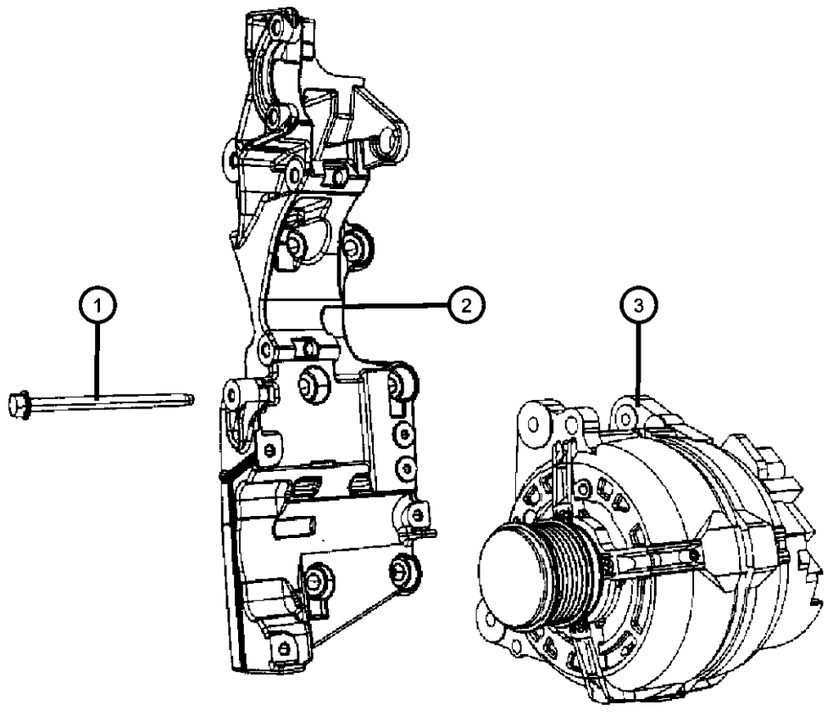

ITEM	PART NUMBER	QTY	LINE	SERIES	BODY	ENGINE	TRANS	TRIM	DESCRIPTION
1	06508316AA	2				ECD			SCREW, Alternator to Accessory Mount Bracket, Mounting
2	68000635AA	1				ECD			BRACKET, Accessory Mount
3	05033757AB	1	J, T, U		49, 74	ECD			ALTERNATOR

COMPASS/PATRIOT (MK)

SERIES	LINE	BODY	ENGINE	TRANSMISSION
H = HIGHLINE L = LOWLINE P = PREMIUM	J = JEEP - 4WD T = JEEP - 2WD	49 = HATCHBACK TYPE #2 74 = SPORT UTILITY 4-DR TYPE #4	ED3 = 2.4L 4 Cyl DOHC 16V Dual VVT Engine	DD7 = 5-Speed Manual T355 Transmission DEF = 6-Speed Manual Aisin BG6 Trans DAV = Continuously Variable Transmission DAW = Cont.Var. w/Off-Rd Crawl Ratio Trans

Modules, Electronic
Figure 8-410

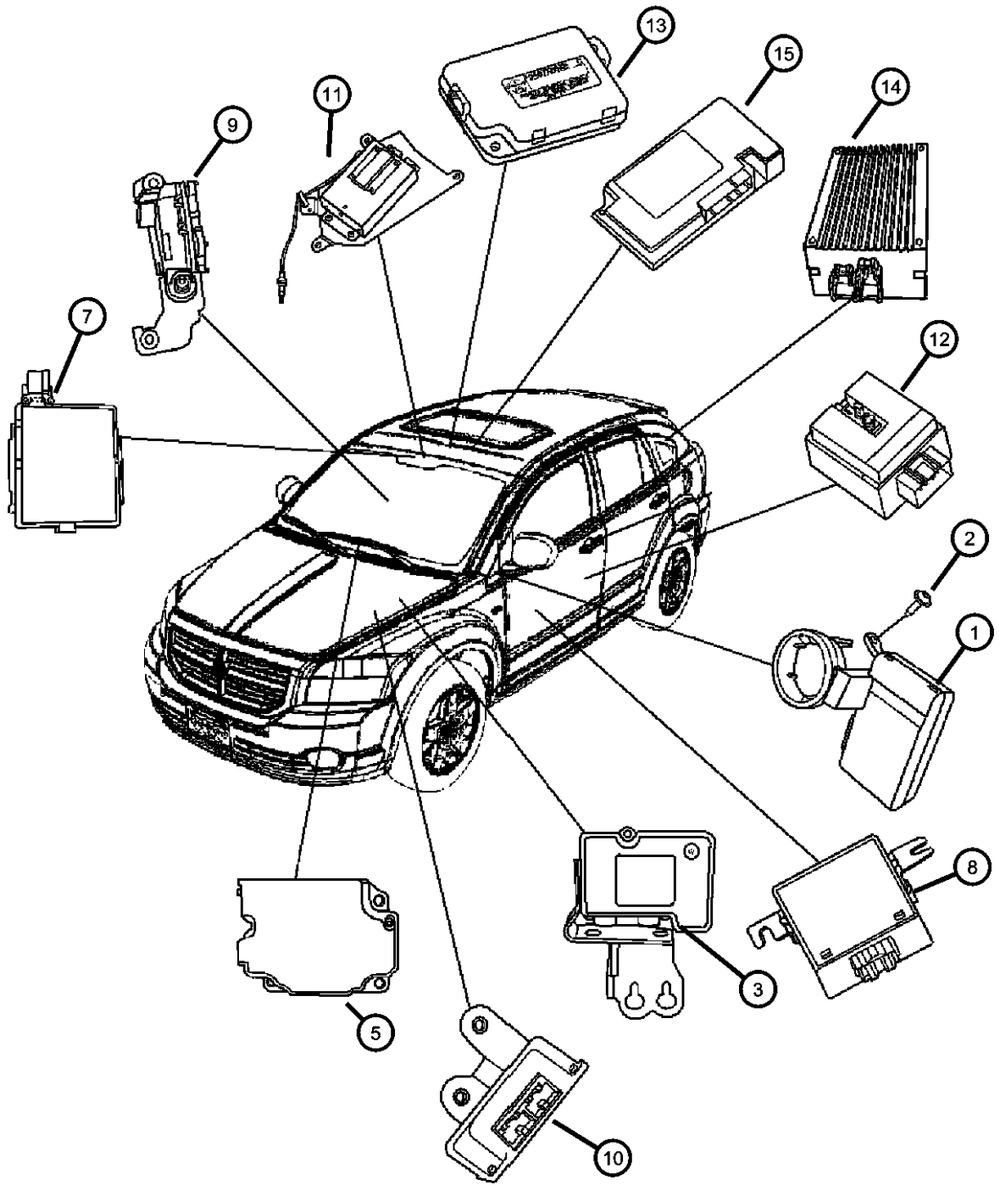

ITEM	PART NUMBER	QTY	LINE	SERIES	BODY	ENGINE	TRANS	TRIM	DESCRIPTION
1									MODULE, Receiver
	05026216AF	1	J, T, U		49, 74				[GXX,GXR,XGM]
	05026218AF	1	J, T, U		49, 74				[GXX,GXR,LAB]
	05026222AF	1	J, T, U		49, 74				[GXX,GXP], Export
	05026225AF	1	J, T, U		49, 74				[GXX+GXN], Export
	05026226AF	1	J, T, U		49, 74				[GXX]
	05026228AG	1	J, T, U		49, 74				[GXX,LS9], Export
	56040547AB	1							[GXP,GXX,XGM]
	56040683AA	1							[GXR,XGM,GXX]
2	06508440AA	1							SCREW
3									MODULE, Anti-Lock Brake System
	05179872AA	1	J		49				[BNB,BNS]
	05191003AA	1	J, T		74				[BNB,BNH,BNL,BNS]
	05191006AB	1	U		49, 74				[BNB,BNS]
		1	J, T		49, 74				[BNB,BNS]
-4									SEAL, ECU Coil Seal
	05189425AA	12	J		49				ABS Module
		12	J, T		74				ABS Module
	68020717AA	12	U		49, 74				ABS Module
5									MODULE, Occupant Restraint
	04672607AD	1	J, T, U		49				[CJ4,CJ1]
	04672609AD	1	J, T, U		49				[CJ4,CG1], Export
	04672610AC	1	J, T, U		49				[CG1] Mexico
	04672611AA	1	J, T, U		74				[CJ4,CG1]
	04672612AA	1	J, T, U		74				[CJ4,CG1,CJ1]
	04672613AA	1	J, T, U		74				[CJ4,CG1,CJ1], Export
	04672614AA	1	J, T, U		74				[CG1]
	04896619AA	1	J, T, U		49				Export
		1	J		49				[CG1,CJ4,CJ1], Export
	04896615AA	1	J, T, U		74				[CG1,CJ4], Export
	04896618AA	1	J, T, U		49				[CG1,CJ4,CJ1]
		1	J		49				[CG1,CJ4,CJ1]
-6	05097674AA	3							NUT, Hex

COMPASS/PATRIOT (MK)

SERIES	LINE	BODY	ENGINE	TRANSMISSION
H = HIGHLINE L = LOWLINE P = PREMIUM	J = JEEP - 4WD T = JEEP - 2WD	49 = HATCHBACK TYPE #2 74 = SPORT UTILITY 4-DR TYPE #4	ED3 = 2.4L 4 Cyl DOHC 16V Dual VVT Engine	DD7 = 5-Speed Manual T355 Transmission DEF = 6-Speed Manual Aisin BG6 Trans DAV = Continuously Variable Transmission DAW = Cont.Var. w/Off-Rd Crawl Ratio Trans

Modules, Electronic
Figure 8-410

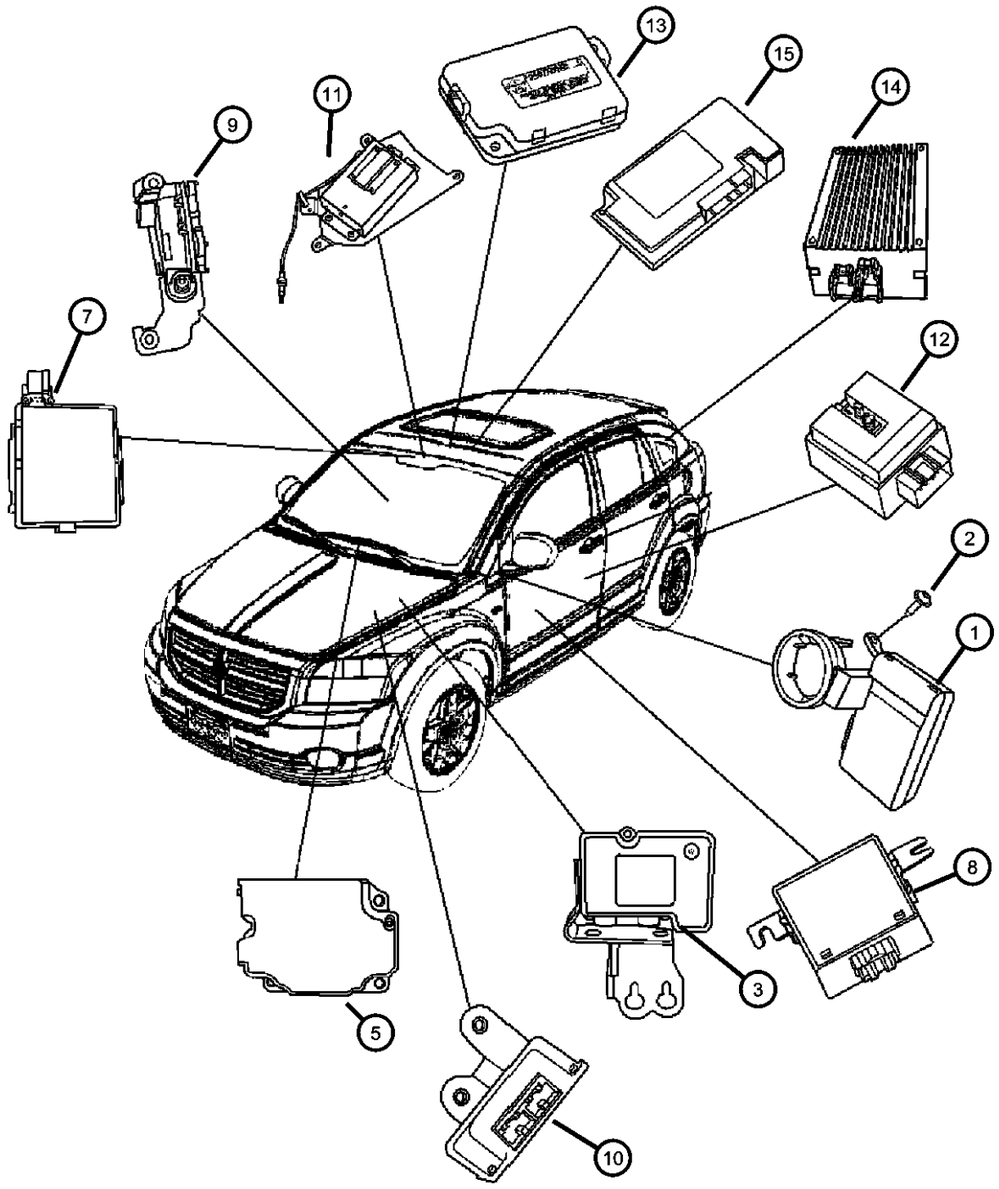

ITEM	PART NUMBER	QTY	LINE	SERIES	BODY	ENGINE	TRANS	TRIM	DESCRIPTION
7									MODULE, Garage Door Opener
	56044968AA	1	J		49				
		1	J, T, U		74				
8	05033301AF	1	J, U		49, 74				MODULE, AWD Driveline
9									MODULE, Electronic Stability
	05033321AC	1	J, U		49, 74				
	05033322AC	1	T		49, 74				
10									MODULE, Transmission Control
	05094622AA	1	J, T, U		74	ED3	DAW		[DAW]
	05094621AH	1	J, T, U		49, 74	ED3	DAV		[DAV]
11	05064260AD	1							MODULE, Message Center
12	04602522AD	1	J		49				MODULE, Heated Seat Control
13	04671918AE	1	J, T, U		49, 74				MODULE, Compass
14	04671954AG	1	J, T, U		49, 74				MODULE, Power Inverter, [JKV]
15									MODULE, Telematics
	05064013AV	1	J		49				
	05064070AE	1	J, T, U		49, 74				

COMPASS/PATRIOT (MK)

SERIES	LINE	BODY	ENGINE	TRANSMISSION
H = HIGHLINE L = LOWLINE P = PREMIUM	J = JEEP - 4WD T = JEEP - 2WD	49 = HATCHBACK TYPE #2 74 = SPORT UTILITY 4-DR TYPE #4	ED3 = 2.4L 4 Cyl DOHC 16V Dual VVT Engine	DD7 = 5-Speed Manual T355 Transmission DEF = 6-Speed Manual Aisin BG6 Trans DAV = Continuously Variable Transmission DAW = Cont.Var. w/Off-Rd Crawl Ratio Trans

Fuses/Relays and Totally Integrated Power Module
Figure 8-510

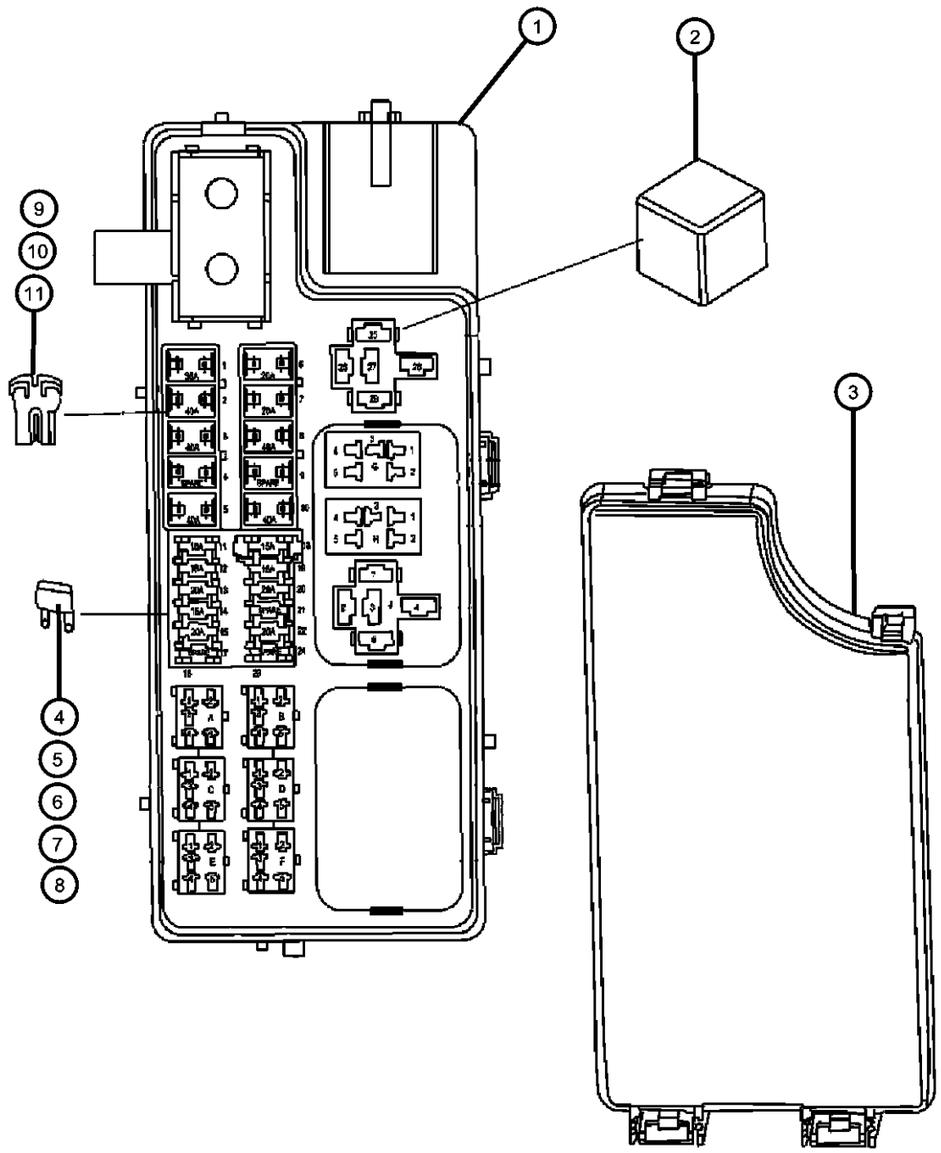

ITEM	PART NUMBER	QTY	LINE	SERIES	BODY	ENGINE	TRANS	TRIM	DESCRIPTION
1									MODULE, Totally Integrated Power
	04692169AE	1	J		49				Up to 06/12/06
	04692207AA	1	J, T, U		49, 74				After 06/12/06
2	05293163AA	2				ECD			RELAY, Mini, Positive Temp Coefficent
3									COVER, Totally Integrated Power Module
	05175568AA	1	J		49				
	68001818AA	1	J, T, U		49, 74				
4	000ATM10	12	J, T, U		49, 74				FUSE, Mini, 10 AMP, Red
5	000ATM15	5	J, T, U		49, 74				FUSE, Mini, 15 AMP, Light Blue
6	000ATM20	7	J, T, U		49, 74				FUSE, Mini, 20 AMP, Yellow
7	000ATM25	2	J, T, U		49, 74				FUSE, Mini, 25 Amp, Natural
8	000ATM30	1	J, T, U		49, 74				FUSE, Mini, 30 AMP, Green
9	04868007AA	2	J, T, U		49, 74				FUSE CARTRIDGE, 30 Amp
10	04868008AA	5	J, T, U		49, 74				FUSE CARTRIDGE, 40 Amp
11	06102078AA	1	J, T, U		49, 74				FUSE CARTRIDGE, 50 Amp

COMPASS/PATRIOT (MK)

SERIES	LINE	BODY	ENGINE	TRANSMISSION
H = HIGHLINE L = LOWLINE P = PREMIUM	J = JEEP - 4WD T = JEEP - 2WD	49 = HATCHBACK TYPE #2 74 = SPORT UTILITY 4-DR TYPE #4	ED3 = 2.4L 4 Cyl DOHC 16V Dual VVT Engine	DD7 = 5-Speed Manual T355 Transmission DEF = 6-Speed Manual Aisin BG6 Trans DAV = Continuously Variable Transmission DAW = Cont.Var. w/Off-Rd Crawl Ratio Trans

AR = use ase required - = Non illustrrated part

Relays and Totally Integrated Power Module Mounting
Figure 8-520

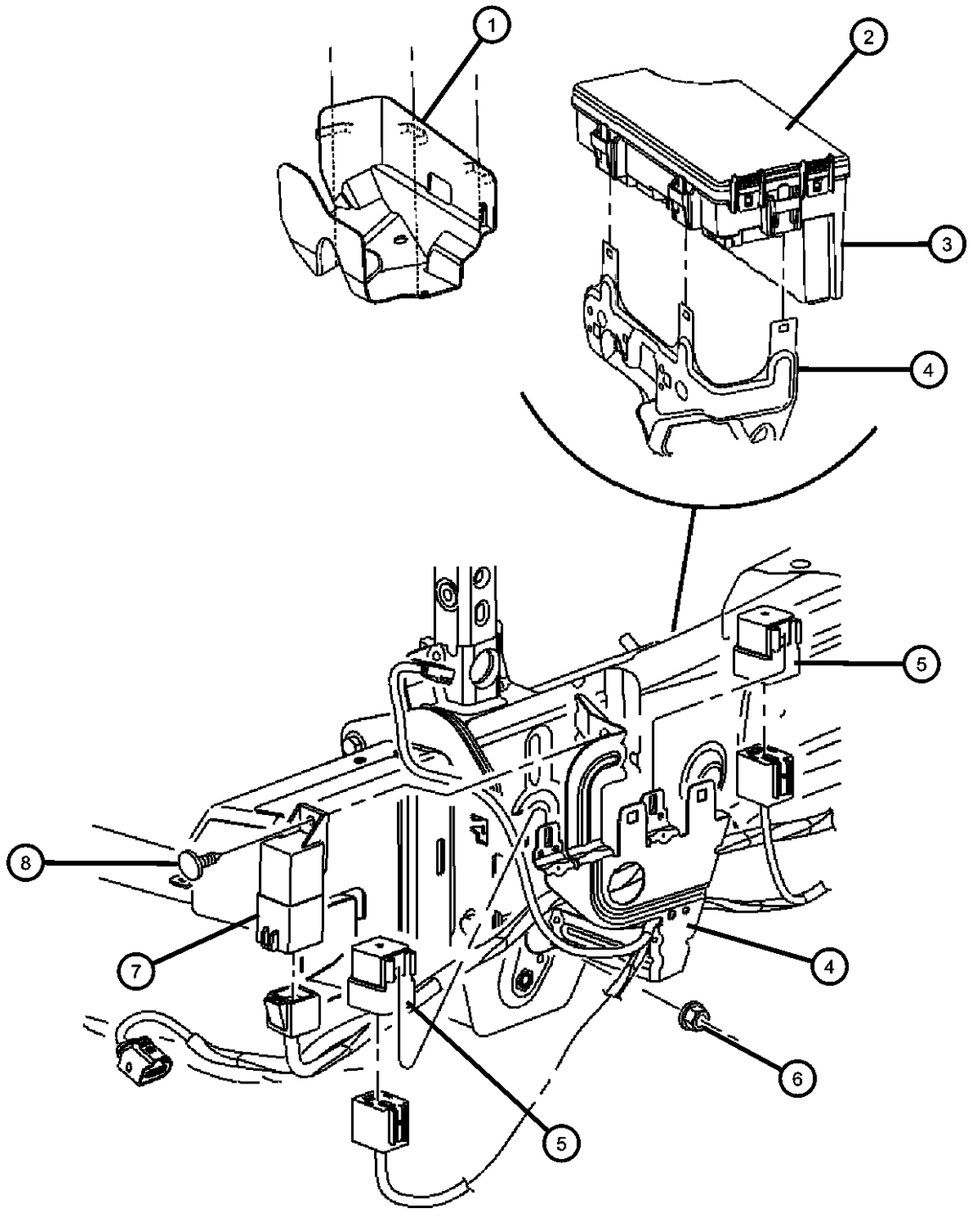

ITEM	PART NUMBER	QTY	LINE	SERIES	BODY	ENGINE	TRANS	TRIM	DESCRIPTION
1	04692044AC	1	J, T, U		49, 74				SHIELD, Splash
2	68001818AA	1	J, T, U		49, 74				COVER, Totally Integrated Power Module
3	04692207AA	1	J, T, U		49, 74				MODULE, Totally Integrated Power
4	04692126AB	1	J, T, U		49, 74				BRACKET, Power Distribution Center
5	05293163AA	2				ECD			RELAY, Mini
6	06104726AB	2							NUT, [M8X1.25], PDC Bracket To Front Rail, Mounting
7	05033351AA	1	J, T, U		49, 74	ECD			MODULE, Glow Plug
8	06030441	1	J, T, U		49, 74	ECD			PIN, Retainer

COMPASS/PATRIOT (MK)

SERIES	LINE	BODY	ENGINE	TRANSMISSION
H = HIGHLINE L = LOWLINE P = PREMIUM	J = JEEP - 4WD T = JEEP - 2WD	49 = HATCHBACK TYPE #2 74 = SPORT UTILITY 4-DR TYPE #4	ED3 = 2.4L 4 Cyl DOHC 16V Dual VVT Engine	DD7 = 5-Speed Manual T355 Transmission DEF = 6-Speed Manual Aisin BG6 Trans DAV = Continuously Variable Transmission DAW = Cont.Var. w/Off-Rd Crawl Ratio Trans

Sensors, Engine Gas
Figure 8-610

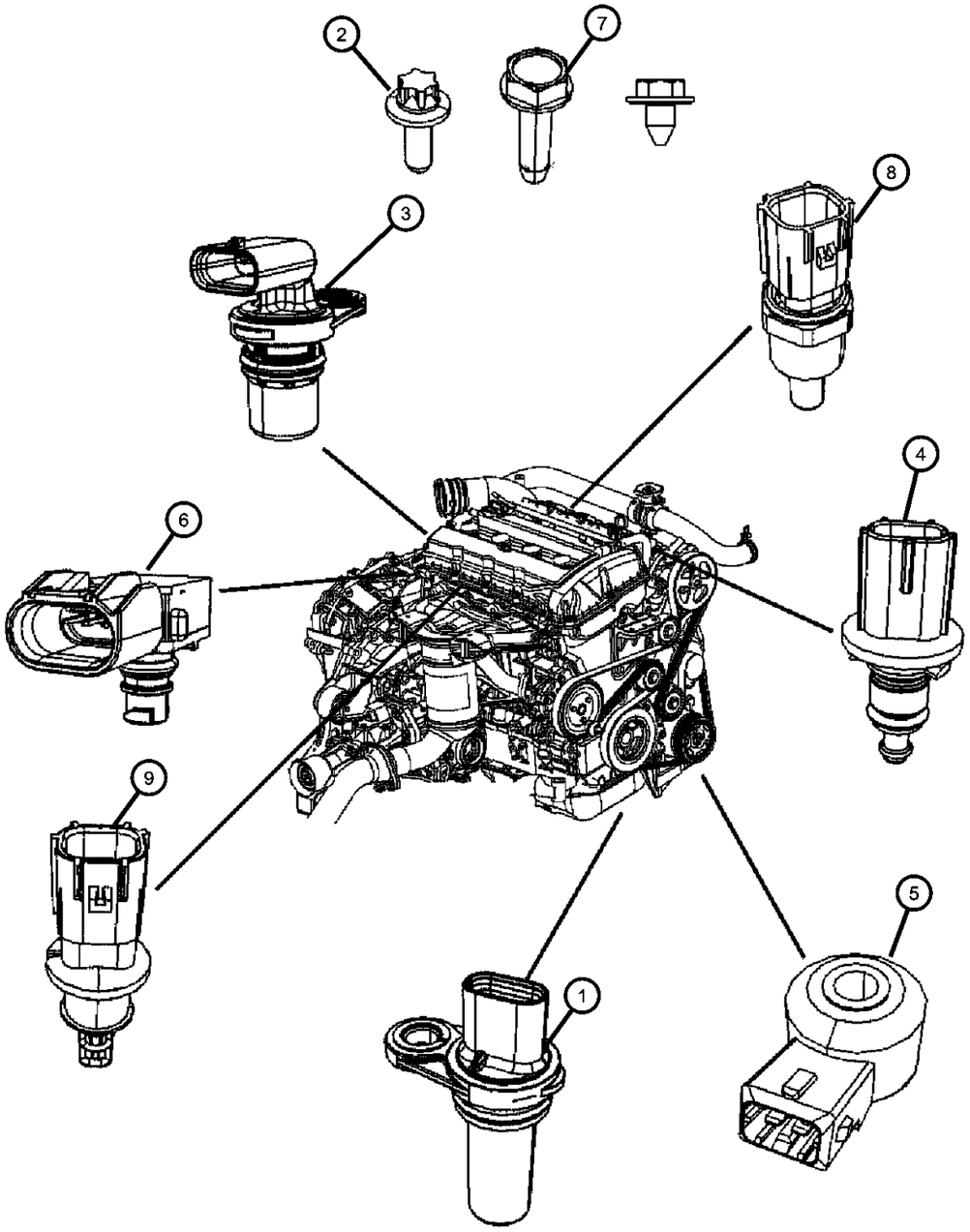

ITEM	PART NUMBER	QTY	LINE	SERIES	BODY	ENGINE	TRANS	TRIM	DESCRIPTION
1	05033307AB	1				ED3			SENSOR, Crankshaft Position
2	06104336AA	1	J, T, U		49, 74	ED3			SCREW
3	05033308AB	2	J, T, U		49, 74	ED3			SENSOR, Camshaft
4	05033313AA	1	J, T, U		49, 74	ED3			SENSOR, Coolant Temperature
5	05033316AA	1	J, T, U		49, 74	ED3			SENSOR, Knock
6	05033310AB	1	J, T, U		49, 74	ED3			SENSOR, MAP
7	06505841AA	1				ED3			SCREW, MAP sensor to intake manifold attaching
8	05033314AA	1	J, T, U		49, 74	ED3			SENSOR, Coolant Temperature, Oil Temperature
9	04606487AB	1	J, T, U		49, 74	ED3			SENSOR, Charge Air Temp, Mounts in Air cleaner hose

COMPASS/PATRIOT (MK)

SERIES	LINE	BODY	ENGINE	TRANSMISSION
H = HIGHLINE L = LOWLINE P = PREMIUM	J = JEEP - 4WD T = JEEP - 2WD	49 = HATCHBACK TYPE #2 74 = SPORT UTILITY 4-DR TYPE #4	ED3 = 2.4L 4 Cyl DOHC 16V Dual VVT Engine	DD7 = 5-Speed Manual T355 Transmission DEF = 6-Speed Manual Aisin BG6 Trans DAV = Continuously Variable Transmission DAW = Cont.Var. w/Off-Rd Crawl Ratio Trans

AR = use ase required - = Non illustrrated part

Sensors Engine Diesel [ECD]
Figure 8-615

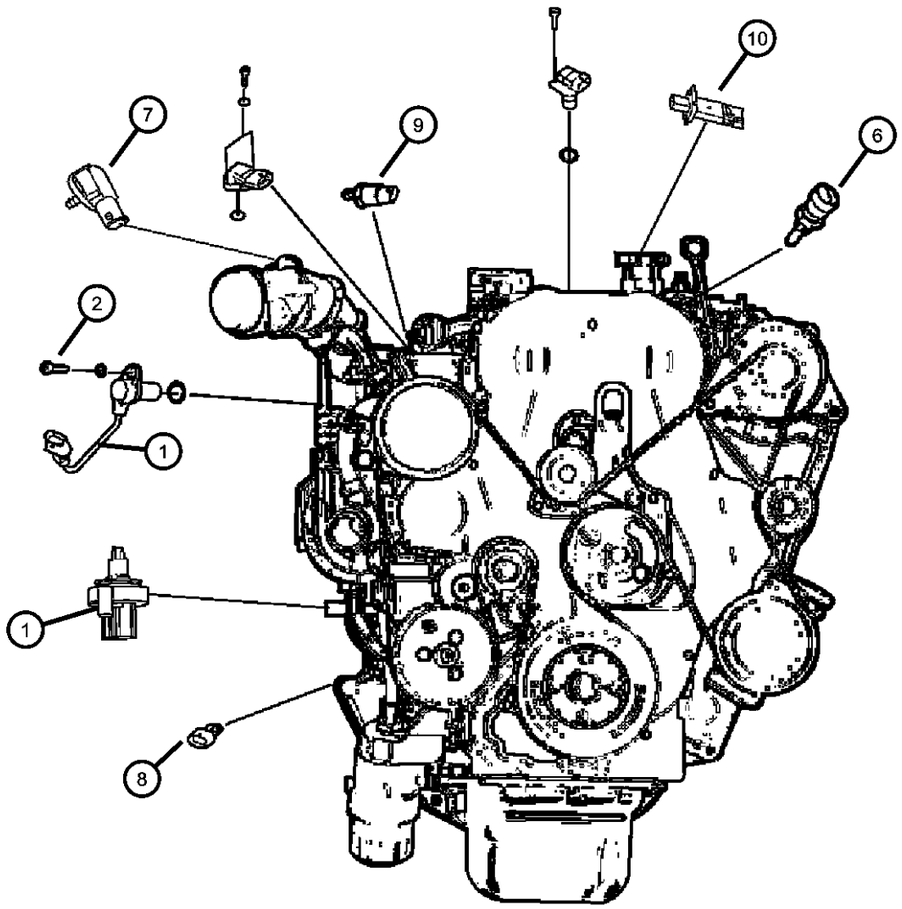

ITEM	PART NUMBER	QTY	LINE	SERIES	BODY	ENGINE	TRANS	TRIM	DESCRIPTION
1	05033378AA	1	J, T, U		49, 74	ECD			SENSOR, Fuel Temperature
2	06104650AA	2				ECD			SCREW, Sensor to inner cooler pipe attaching
-3	05033320AA	1	J, T, U		49, 74	ECD			SENSOR, Mass Airflow
-4	05149036AA	1				ECD			O RING, Between air hose and mass air flow sensor
-5	06104181AA	2				ECD			BOLT, Mass air flow sensor to air box attaching
6	68001452AA	1	J, T, U		49, 74	ECD			SENDING UNIT
7	68001591AA	1	J, T, U		49, 74	ECD			SENSOR
8	68001451AA	1	J, T, U		49, 74	ECD			SENSOR, Knock
9	68001313AA	1	J, T, U		49, 74	ECD			SENSOR, Temperature
10	05149001AA	1	J, T, U		49, 74	ECD			SENSOR, Fuel Temperature, Pressure and temperature
-11									SENSOR, Crankshaft
	68025592AA	1	J, T, U		74	ECD			
		1	J, T, U		49	ECD			

COMPASS/PATRIOT (MK)

SERIES	LINE	BODY	ENGINE	TRANSMISSION
H = HIGHLINE L = LOWLINE P = PREMIUM	J = JEEP - 4WD T = JEEP - 2WD	49 = HATCHBACK TYPE #2 74 = SPORT UTILITY 4-DR TYPE #4	ED3 = 2.4L 4 Cyl DOHC 16V Dual VVT Engine	DD7 = 5-Speed Manual T355 Transmission DEF = 6-Speed Manual Aisin BG6 Trans DAV = Continuously Variable Transmission DAW = Cont.Var. w/Off-Rd Crawl Ratio Trans

AR = use ase required - = Non illustrrated part

Sensors Oxygen
Figure 8-620

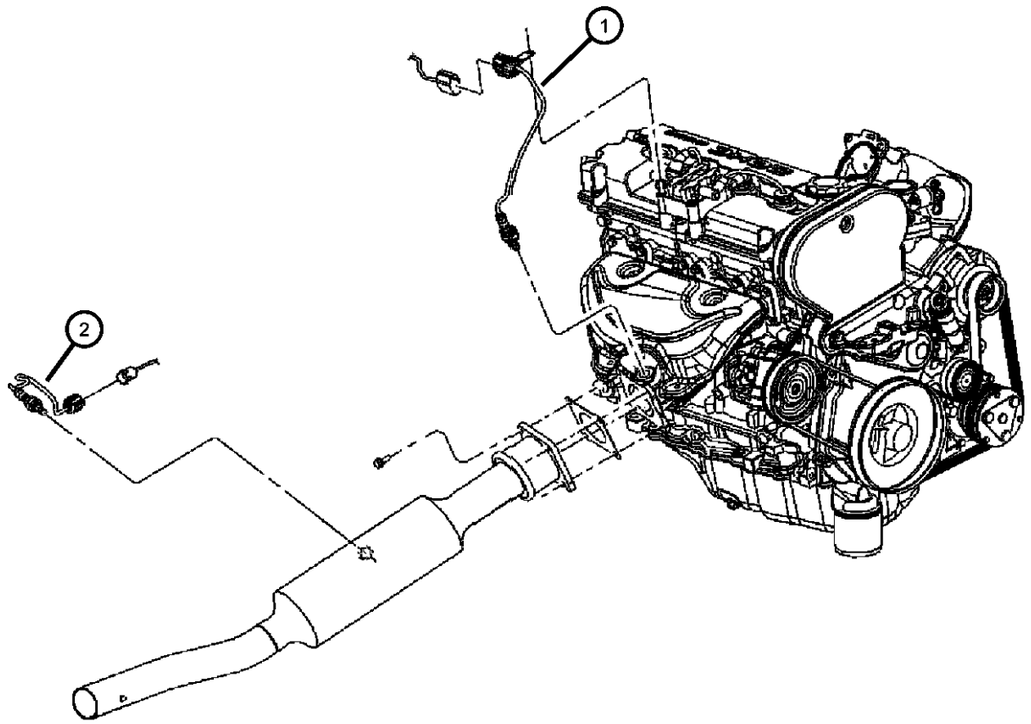

ITEM	PART NUMBER	QTY	LINE	SERIES	BODY	ENGINE	TRANS	TRIM	DESCRIPTION
1	56029084AA	1	J, T, U		49, 74	ED3			SENSOR, OxygenBefore Catalyst
2	56029084AA	1	J, T, U		49, 74	ED3			SENSOR, OxygenAfter Catalyst

COMPASS/PATRIOT (MK)

SERIES	LINE	BODY	ENGINE	TRANSMISSION
H = HIGHLINE L = LOWLINE P = PREMIUM	J = JEEP - 4WD T = JEEP - 2WD	49 = HATCHBACK TYPE #2 74 = SPORT UTILITY 4-DR TYPE #4	ED3 = 2.4L 4 Cyl DOHC 16V Dual VVT Engine	DD7 = 5-Speed Manual T355 Transmission DEF = 6-Speed Manual Aisin BG6 Trans DAV = Continuously Variable Transmission DAW = Cont.Var. w/Off-Rd Crawl Ratio Trans

AR = use ase required - = Non illustrrated part

Sensors, Transmission
Figure 8-630

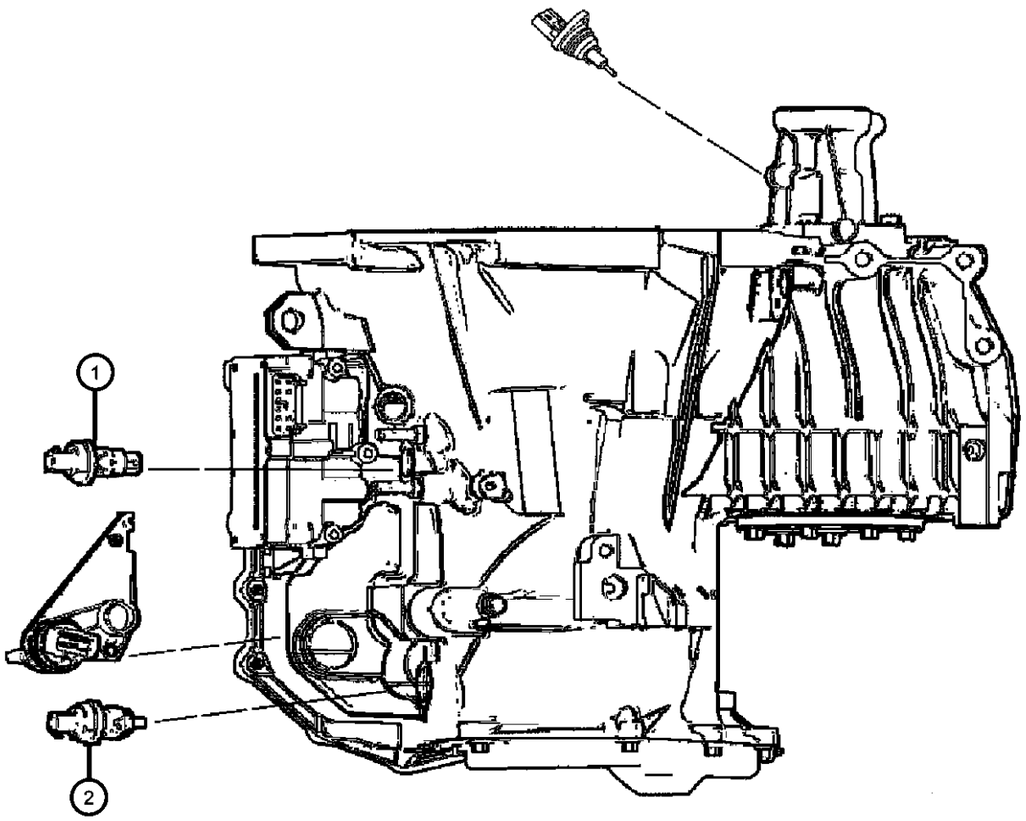

ITEM	PART NUMBER	QTY	LINE	SERIES	BODY	ENGINE	TRANS	TRIM	DESCRIPTION
1	05189841AA	1	J, T, U		49, 74	ED3	DAW		SENSOR, Primary revolution
2	05189840AA	1	J, T, U		49, 74	ED3	DAW		SENSOR, Secondary revolution

COMPASS/PATRIOT (MK)

SERIES	LINE	BODY	ENGINE	TRANSMISSION
H = HIGHLINE L = LOWLINE P = PREMIUM	J = JEEP - 4WD T = JEEP - 2WD	49 = HATCHBACK TYPE #2 74 = SPORT UTILITY 4-DR TYPE #4	ED3 = 2.4L 4 Cyl DOHC 16V Dual VVT Engine	DD7 = 5-Speed Manual T355 Transmission DEF = 6-Speed Manual Aisin BG6 Trans DAV = Continuously Variable Transmission DAW = Cont.Var. w/Off-Rd Crawl Ratio Trans

Sensors, Body
Figure 8-640

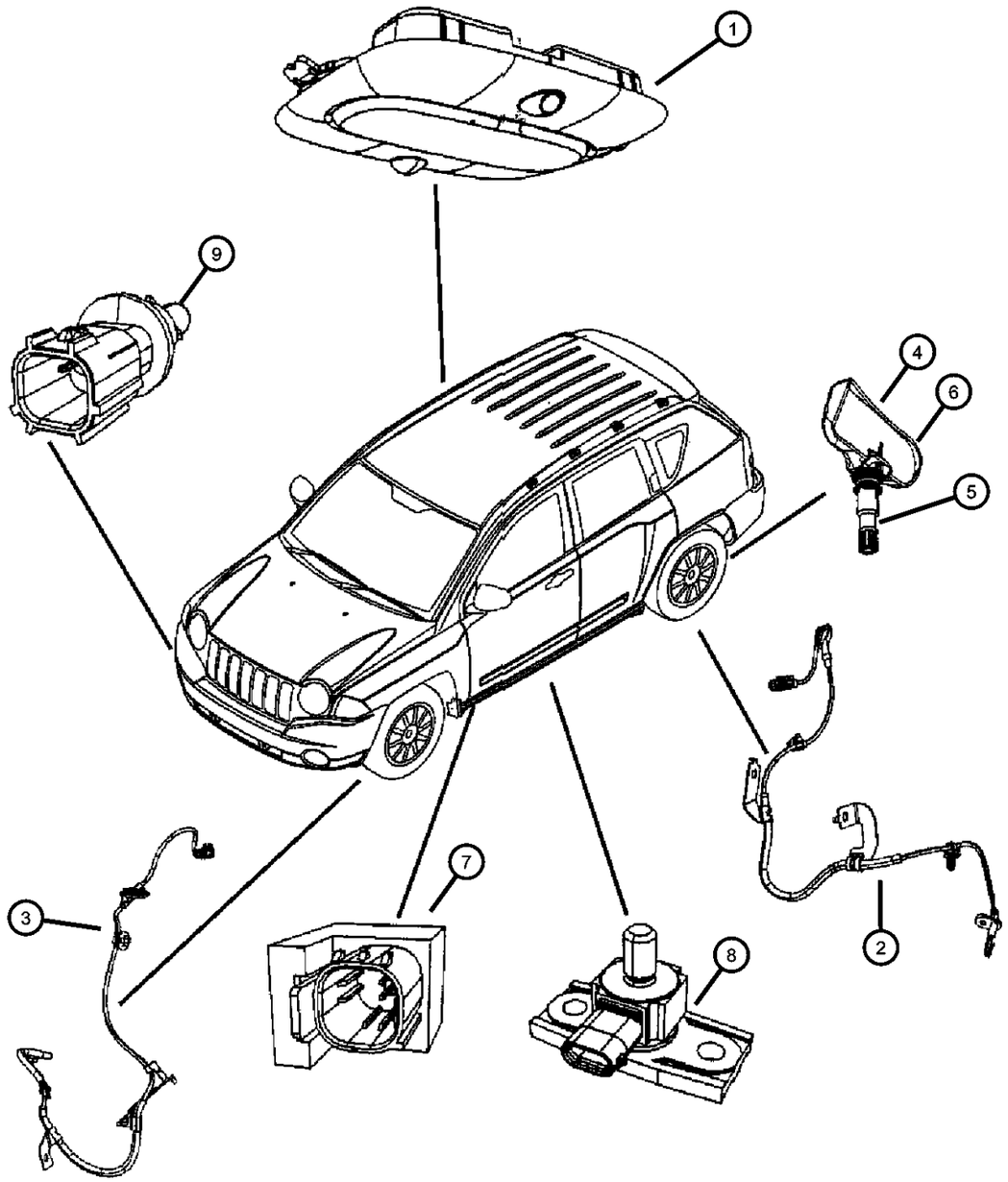

ITEM	PART NUMBER	QTY	LINE	SERIES	BODY	ENGINE	TRANS	TRIM	DESCRIPTION
1									SENSOR, Intrusion Module
	1BX26DW1AD	1	J		49				
		1	J, T, U		74				
		1	J, T, U		49				
2									SENSOR, Anti-Lock Brakes
	05105062AA	1	T		49, 74				Right Rear
	05105063AB	1	T		49, 74				Left Rear
	05105064AA	1	J, U		49, 74				Right Rear
	05105065AB	1	J, U		49, 74				Left Rear
3									SENSOR, Anti-Lock Brakes
	05105572AA	1	J		49				Right Front
		1	J, T, U		49, 74				Right Front
	05105573AA	1	J		49				Left Front
		1	J, T, U		49, 74				Left Front
4									SENSOR, Tire Pressure, Valve stem
	56053030AB	4							
	56053031AB	4							Export
5									HARDWARE KIT, Mounting
	68001743AA	4	J, T, U		49, 74				THIS KIT CONTAINS:1- S120120001, NUT, TPM RETAINING 1- S122990001, WASHER, SEAL SUPPORT 1- S122140001, CAP, VALVE STEM, BLACK, EUROPE 1- S120121001, CAP, VALVE STEM
	68001744AA	4	J, T, U		49, 74				THIS KIT CONTAINS: 1- S122914001, VALVE CORE, TPM 1- S120121001, CAP, VALVE STEM, GREY, DOMESTIC 1- S122140001, CAP, VALVE STEM, BLACK, EUROPE
6									SENSOR PACKAGE, Tire Pressure

COMPASS/PATRIOT (MK)

SERIES	LINE	BODY	ENGINE	TRANSMISSION
H = HIGHLINE L = LOWLINE P = PREMIUM	J = JEEP - 4WD T = JEEP - 2WD	49 = HATCHBACK TYPE #2 74 = SPORT UTILITY 4-DR TYPE #4	ED3 = 2.4L 4 Cyl DOHC 16V Dual VVT Engine	DD7 = 5-Speed Manual T355 Transmission DEF = 6-Speed Manual Aisin BG6 Trans DAV = Continuously Variable Transmission DAW = Cont.Var. w/Off-Rd Crawl Ratio Trans

Sensors, Body
Figure 8-640

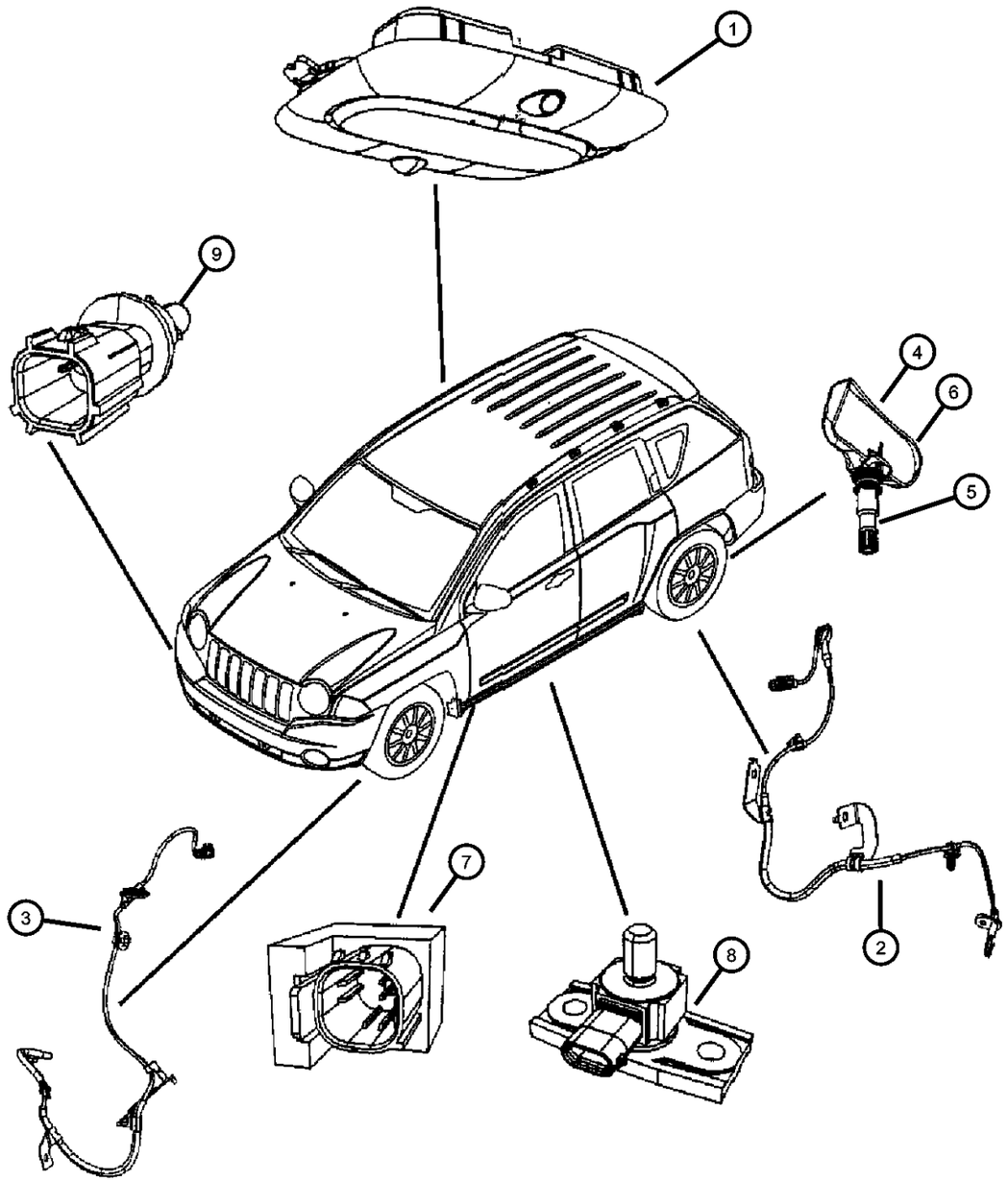

ITEM	PART NUMBER	QTY	LINE	SERIES	BODY	ENGINE	TRANS	TRIM	DESCRIPTION
	68001696AA	4	J, T, U		49, 74				This package contains: 56053030AC SENSOR - TIRE PRESSURE 56053033AA NUT - TIRE PRESSURE K6855511 INSTRUCTION SHEET
	68001698AA	4	J, T, U		49, 74				This package contains: 56053031AC SENSOR - TIRE PRESSURE 56053033AA NUT - TIRE PRESSURE K6855511 INSTRUCTION SHEET, Export
7	05084008AA	2	J, T		49, 74				SENSOR, Seat Position
8	05084007AJ	1	J, T		49, 74				SENSOR, Strain Gauge
9	05293138AA	1	J, T, U		49, 74	ECD, ED3			SENSOR, Air Temperature, Ambient air temperature mounts to frame

COMPASS/PATRIOT (MK)

SERIES	LINE	BODY	ENGINE	TRANSMISSION
H = HIGHLINE L = LOWLINE P = PREMIUM	J = JEEP - 4WD T = JEEP - 2WD	49 = HATCHBACK TYPE #2 74 = SPORT UTILITY 4-DR TYPE #4	ED3 = 2.4L 4 Cyl DOHC 16V Dual VVT Engine	DD7 = 5-Speed Manual T355 Transmission DEF = 6-Speed Manual Aisin BG6 Trans DAV = Continuously Variable Transmission DAW = Cont.Var. w/Off-Rd Crawl Ratio Trans

Powertrain Control Module
Figure 8-710

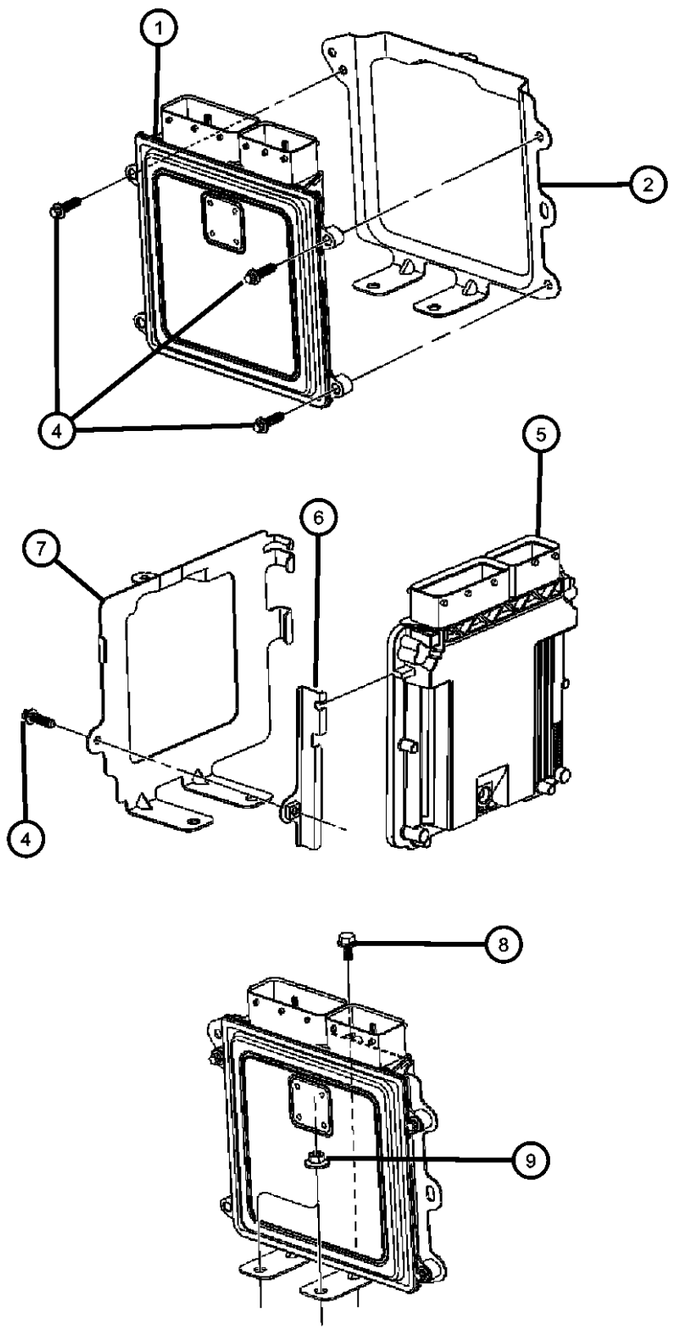

ITEM	PART NUMBER	QTY	LINE	SERIES	BODY	ENGINE	TRANS	TRIM	DESCRIPTION
1	04692101AD	1	J, T, U		49, 74	ED3			MODULE, Powertrain Control, Generic
2	05033295AB	1	J		49	ED3			BRACKET, Module
-3									ALIGNMENT PLATE, PLATE
	05094994AA	1	J, T, U		49, 74	ED3			
	05187122AA	1	J, T, U		49, 74	ECD			
4	06104077AA	3	J		49	ED3			SCREW, Powertrain Control Module to Bracket attaching
5	05094599AC	1	J, T, U		49, 74	ECD	DEF		MODULE, Engine controller, Diesel
6	05094248AA	1				ECD			STRAP, Module to bracketMounting
7	05033296AB	1				ECD			BRACKET, Engine Control Module
8	06104336AA	1				ED3			SCREW, Attaching screws to shock tower
9	06104725AA	2				ECD			NUT AND WASHER, M6x1, Diesel Controller To Bracket, Mounting
-10	05187121AA	1	J, T, U		49, 74	ECD			COVER, Connector
-11	05094993AA	1	J, T, U		49, 74	ED3			COVER, Wiring Protector
-12	05187120AA	1	J, T, U		49, 74	ECD, ED3			STUD PLATE, Control Module

COMPASS/PATRIOT (MK)

SERIES	LINE	BODY	ENGINE	TRANSMISSION
H = HIGHLINE L = LOWLINE P = PREMIUM	J = JEEP - 4WD T = JEEP - 2WD	49 = HATCHBACK TYPE #2 74 = SPORT UTILITY 4-DR TYPE #4	ED3 = 2.4L 4 Cyl DOHC 16V Dual VVT Engine	DD7 = 5-Speed Manual T355 Transmission DEF = 6-Speed Manual Aisin BG6 Trans DAV = Continuously Variable Transmission DAW = Cont.Var. w/Off-Rd Crawl Ratio Trans

AR = use ase required - = Non illustrrated part

Switches - Instrument Panel
Figure 8-810

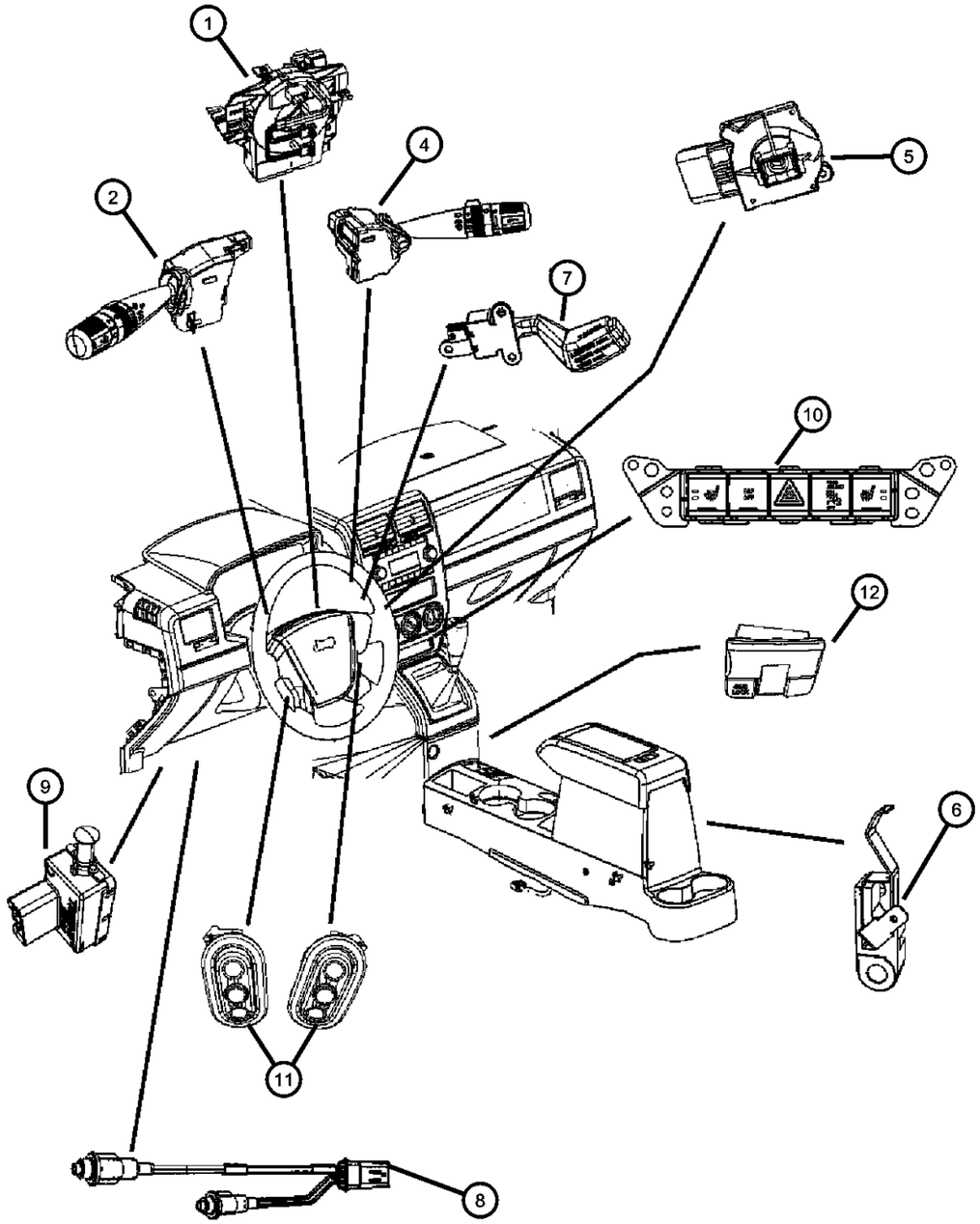

ITEM	PART NUMBER	QTY	LINE	SERIES	BODY	ENGINE	TRANS	TRIM	DESCRIPTION
1									CLOCKSPRING
	68000477AA	1	J, T, U		49, 74				Up to 06/26/06
	68003216AA	1	J, T, U		49, 74				After 06/26/06
2									SWITCH, Multifunction
	05183946AA	1	J, T, U		49, 74				[LPG,LNJ]
	05183947AA	1	J, T, U		49, 74				[LNJ]
	05183950AA	1	J, T, U		49, 74				[LPG]
	05183952AA	1	J, T, U		49, 74				
-3	05189814AA	1							WIRING, Jumper
4									SWITCH, Wiper
	68003215AA	1	J		49				
		1	J, T, U		49, 74				
5	04685719AD	1	J		49		DAV, DAW		SWITCH, Ignition
6	05209922	1	J, T, U		49, 74				SWITCH, Parking Brake
7	04671929AA	1	J, T, U		49, 74				SWITCH, Speed Control
8									SWITCH, Clutch Starter Interlock
	05026131AB	1	U		49, 74		DD7		
		1	J, T		49, 74		DD7		
	05026410AA	1	J, T		49, 74		DEF		
		1	U		49, 74		DEF		
9	05083344AA	1	J, T, U		49, 74				SWITCH PACKAGE, Stop Lamp
10									SWITCH, Pod
	04602721AC	1	J, T, U		49				[XCA]
	04602722AC	1	J, T, U		49				[XCA,CMA]
	04602724AC	1							[JKL]
	04602726AC	1							[JKL,CAM]
	04602728AC	1	U, J, T		49, 74				
	04602730AC	1	J, T, U		49, 74				[CMA]
11									SWITCH, Remote Radio
	04685729AB	1	J, T, U		49, 74				Left
	04685728AB	1	J, T, U		49, 74				Right
12									SWITCH, Transfer Case
	05107931AA	1	J, U		49, 74				[AWP]

COMPASS/PATRIOT (MK)

SERIES	LINE	BODY	ENGINE	TRANSMISSION
H = HIGHLINE L = LOWLINE P = PREMIUM	J = JEEP - 4WD T = JEEP - 2WD	49 = HATCHBACK TYPE #2 74 = SPORT UTILITY 4-DR TYPE #4	ED3 = 2.4L 4 Cyl DOHC 16V Dual VVT Engine	DD7 = 5-Speed Manual T355 Transmission DEF = 6-Speed Manual Aisin BG6 Trans DAV = Continuously Variable Transmission DAW = Cont.Var. w/Off-Rd Crawl Ratio Trans

AR = use ase required - = Non illustrrated part

Switches - Instrument Panel
Figure 8-810

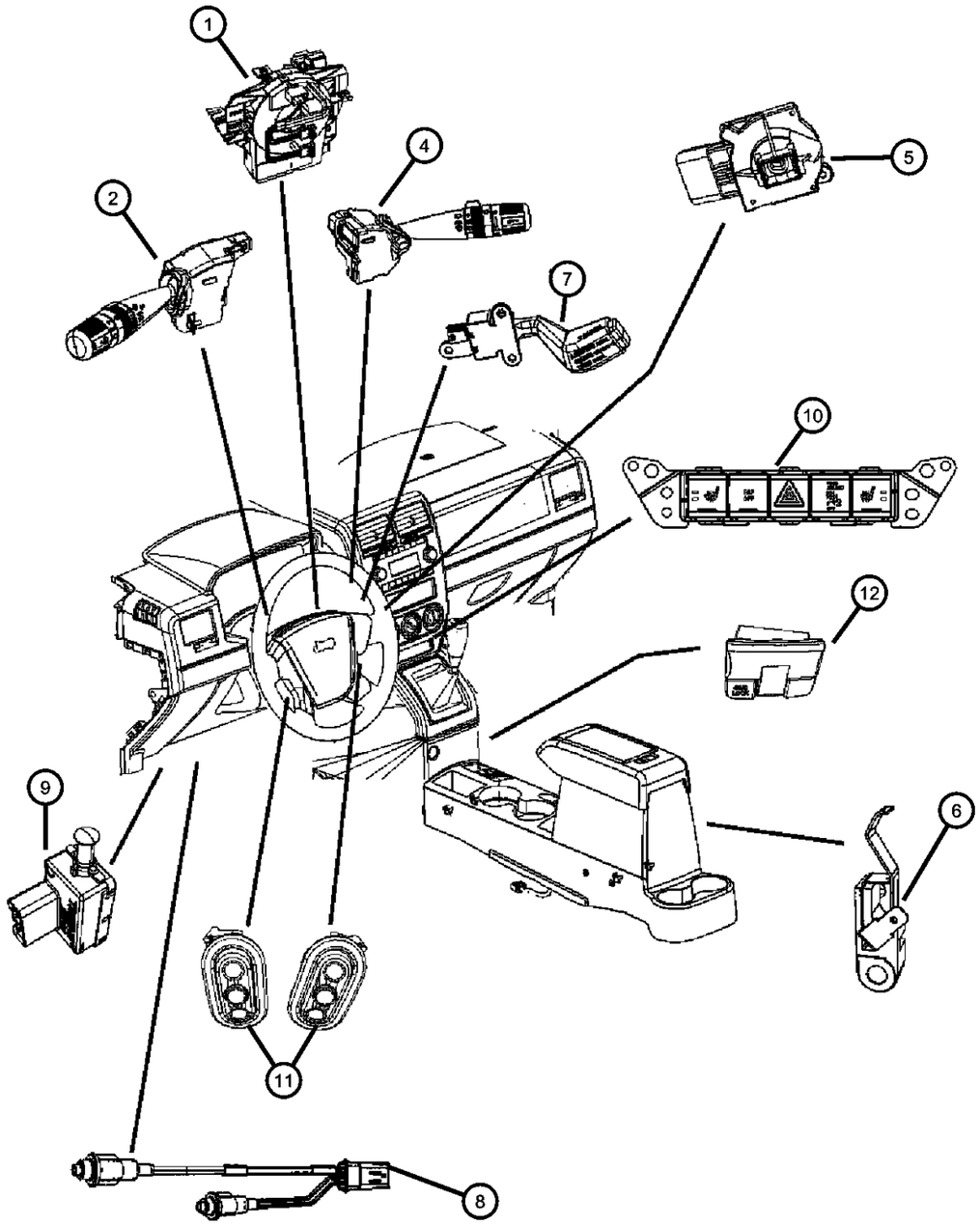

ITEM	PART NUMBER	QTY	LINE	SERIES	BODY	ENGINE	TRANS	TRIM	DESCRIPTION
	05107932AA	1	J, U						
-13									SWITCH, Horn
	05189428AA	1	J, T, U		49, 74				Up to 09/15/06
	05189428AB	1	J, T, U		74				After 09/15/06
		1	J, T, U		49				After 09/15/06

COMPASS/PATRIOT (MK)

SERIES	LINE	BODY	ENGINE	TRANSMISSION
H = HIGHLINE L = LOWLINE P = PREMIUM	J = JEEP - 4WD T = JEEP - 2WD	49 = HATCHBACK TYPE #2 74 = SPORT UTILITY 4-DR TYPE #4	ED3 = 2.4L 4 Cyl DOHC 16V Dual VVT Engine	DD7 = 5-Speed Manual T355 Transmission DEF = 6-Speed Manual Aisin BG6 Trans DAV = Continuously Variable Transmission DAW = Cont.Var. w/Off-Rd Crawl Ratio Trans

Switches - Power Train
Figure 8-820

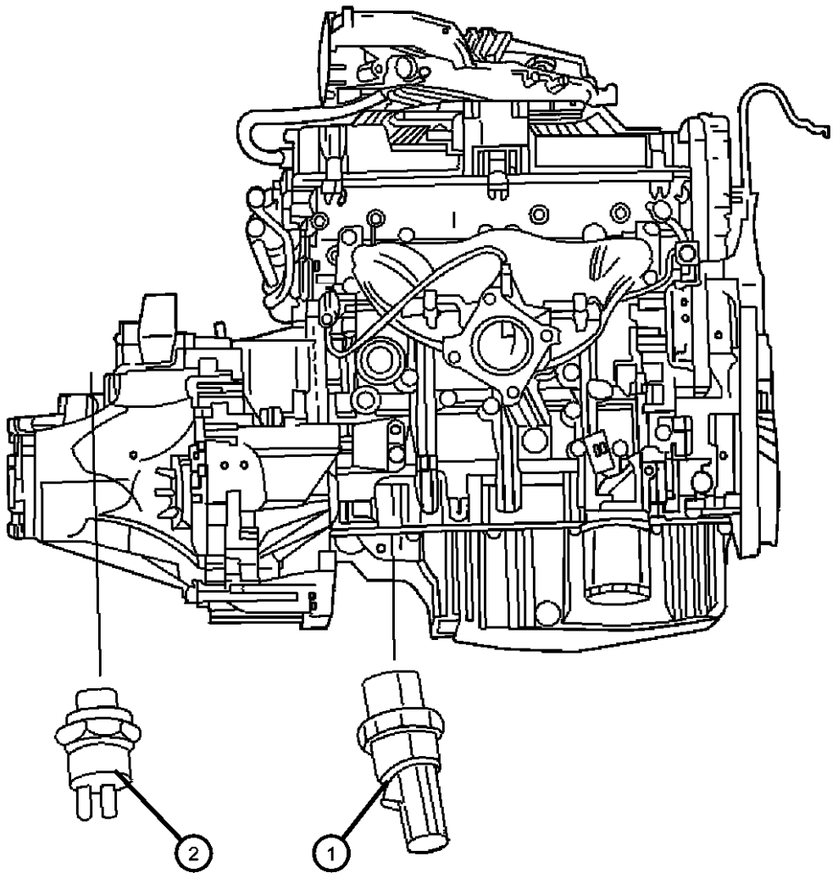

ITEM	PART NUMBER	QTY	LINE	SERIES	BODY	ENGINE	TRANS	TRIM	DESCRIPTION
1	05033317AB	1				ED3			SWITCH, Oil Pressure
2									SWITCH, Back Up Lamp
	05163420AB	1	J, U		49, 74	ED3	DD7		
	05191045AA	1	J, U		49, 74	ECD	DEF		
		1	J		49	ED3	DD7		
-3									SWITCH, Inhibitor, A/T NEUTRAL, SAFETY, BACK UP
	05189839AA	1	J, T, U		49, 74	ED3	DAW		
		1	J, U		49, 74	ED3	DAV		

COMPASS/PATRIOT (MK)

SERIES	LINE	BODY	ENGINE	TRANSMISSION
H = HIGHLINE L = LOWLINE P = PREMIUM	J = JEEP - 4WD T = JEEP - 2WD	49 = HATCHBACK TYPE #2 74 = SPORT UTILITY 4-DR TYPE #4	ED3 = 2.4L 4 Cyl DOHC 16V Dual VVT Engine	DD7 = 5-Speed Manual T355 Transmission DEF = 6-Speed Manual Aisin BG6 Trans DAV = Continuously Variable Transmission DAW = Cont.Var. w/Off-Rd Crawl Ratio Trans

Switches - Body
Figure 8-830

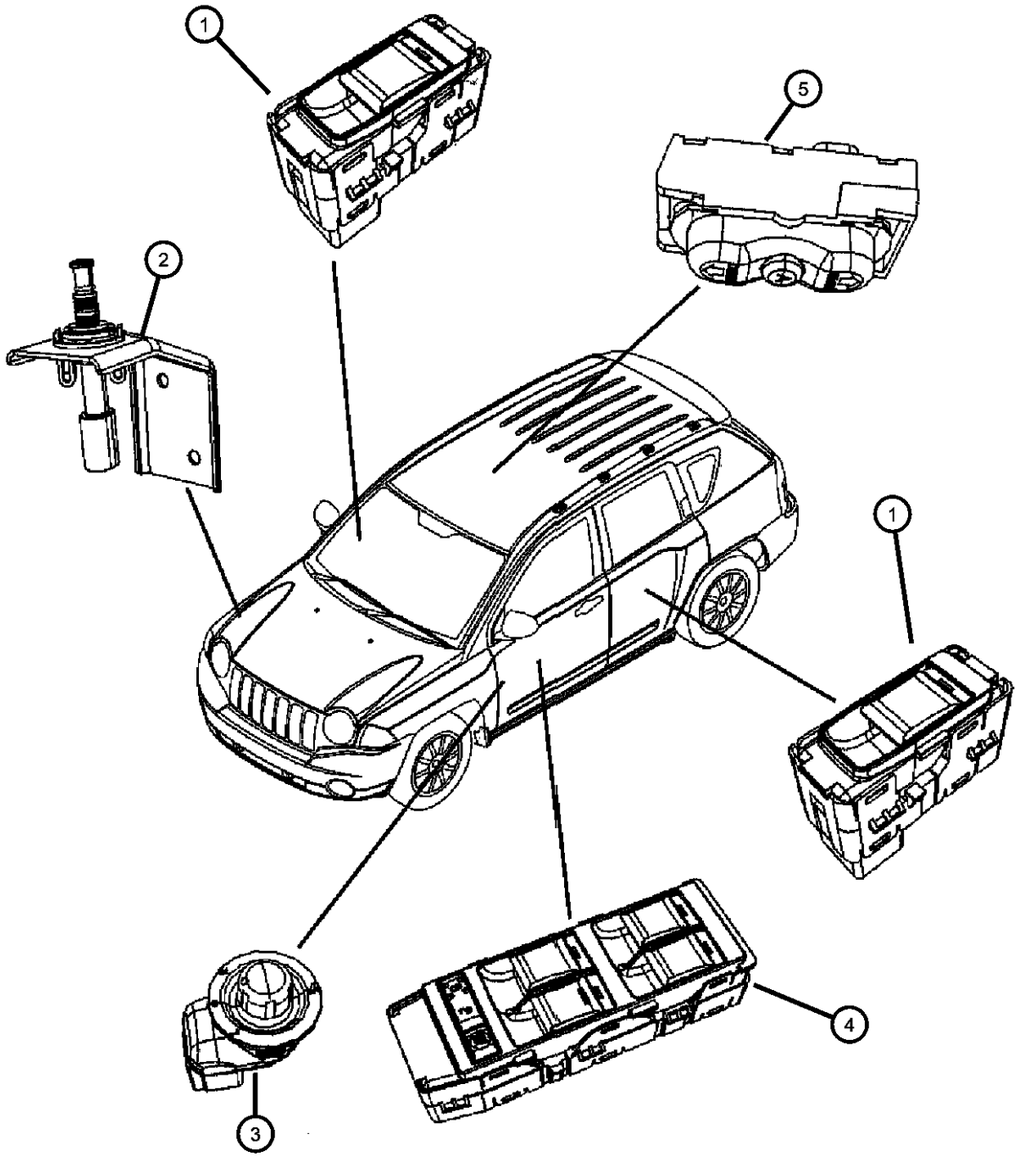

ITEM	PART NUMBER	QTY	LINE	SERIES	BODY	ENGINE	TRANS	TRIM	DESCRIPTION
1	56040693AC	1							SWITCH, Window
2	05026276AA	1	T, U, J		49				SWITCH, Underhood
3									SWITCH, Mirror
	56040536AF	1	U		74				
	V7700008AA								Mopar Alternative Switch
	56040694AD	1	J		49				
	V7700009AA								Mopar Alternative Switch
		1	J, T		74				
	V7700009AA								Mopar Alternative Switch
		1	J, T		49				
	V7700009AA								Mopar Alternative Switch
4									SWITCH, Window and Door Lock
	56040691AD	1	J		49				
		1	J, T		74				
		1	J, T		49				
	56040701AD	1	U		74				
		1	U		49				
5									SWITCH, Sunroof
	04602687AA	1	J, T, U		49				
		1	J, T, U		74				

COMPASS/PATRIOT (MK)

SERIES	LINE	BODY	ENGINE	TRANSMISSION
H = HIGHLINE L = LOWLINE P = PREMIUM	J = JEEP - 4WD T = JEEP - 2WD	49 = HATCHBACK TYPE #2 74 = SPORT UTILITY 4-DR TYPE #4	ED3 = 2.4L 4 Cyl DOHC 16V Dual VVT Engine	DD7 = 5-Speed Manual T355 Transmission DEF = 6-Speed Manual Aisin BG6 Trans DAV = Continuously Variable Transmission DAW = Cont.Var. w/Off-Rd Crawl Ratio Trans

AR = use ase required - = Non illustrrated part

Horns
Figure 8-910

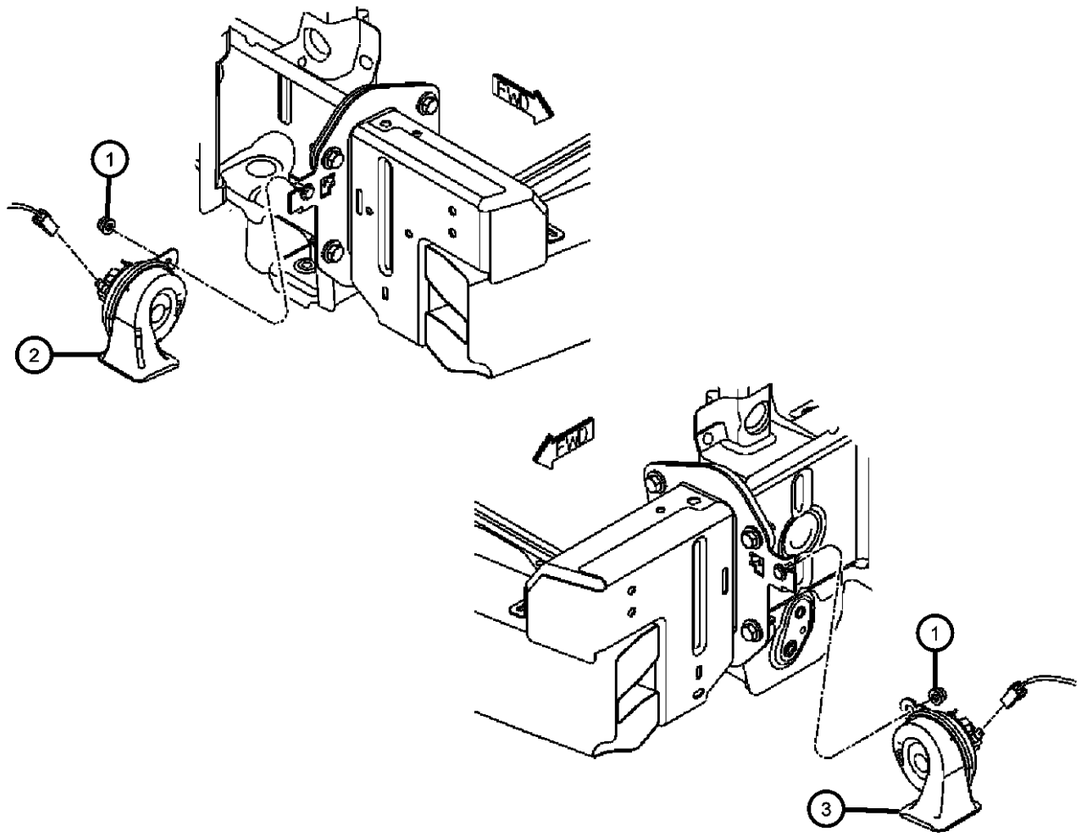

ITEM	PART NUMBER	QTY	LINE	SERIES	BODY	ENGINE	TRANS	TRIM	DESCRIPTION
1	06104744AA	2	J, T, U		49, 74				NUT, Locking
2									HORN AND BRACKET, High Note
	04671942AC	1							Up to 06/15/06
	04671942AD	1	J, T, U		49, 74				After 06/15/06
3									HORN AND BRACKET, Low Note
	04671988AD	1	J, T, U		49, 74				After 06/15/06
	04671988AC	1	J		49				Up to 06/15/06

COMPASS/PATRIOT (MK)

SERIES	LINE	BODY	ENGINE	TRANSMISSION
H = HIGHLINE L = LOWLINE P = PREMIUM	J = JEEP - 4WD T = JEEP - 2WD	49 = HATCHBACK TYPE #2 74 = SPORT UTILITY 4-DR TYPE #4	ED3 = 2.4L 4 Cyl DOHC 16V Dual VVT Engine	DD7 = 5-Speed Manual T355 Transmission DEF = 6-Speed Manual Aisin BG6 Trans DAV = Continuously Variable Transmission DAW = Cont.Var. w/Off-Rd Crawl Ratio Trans

Alarm System
Figure 8-915

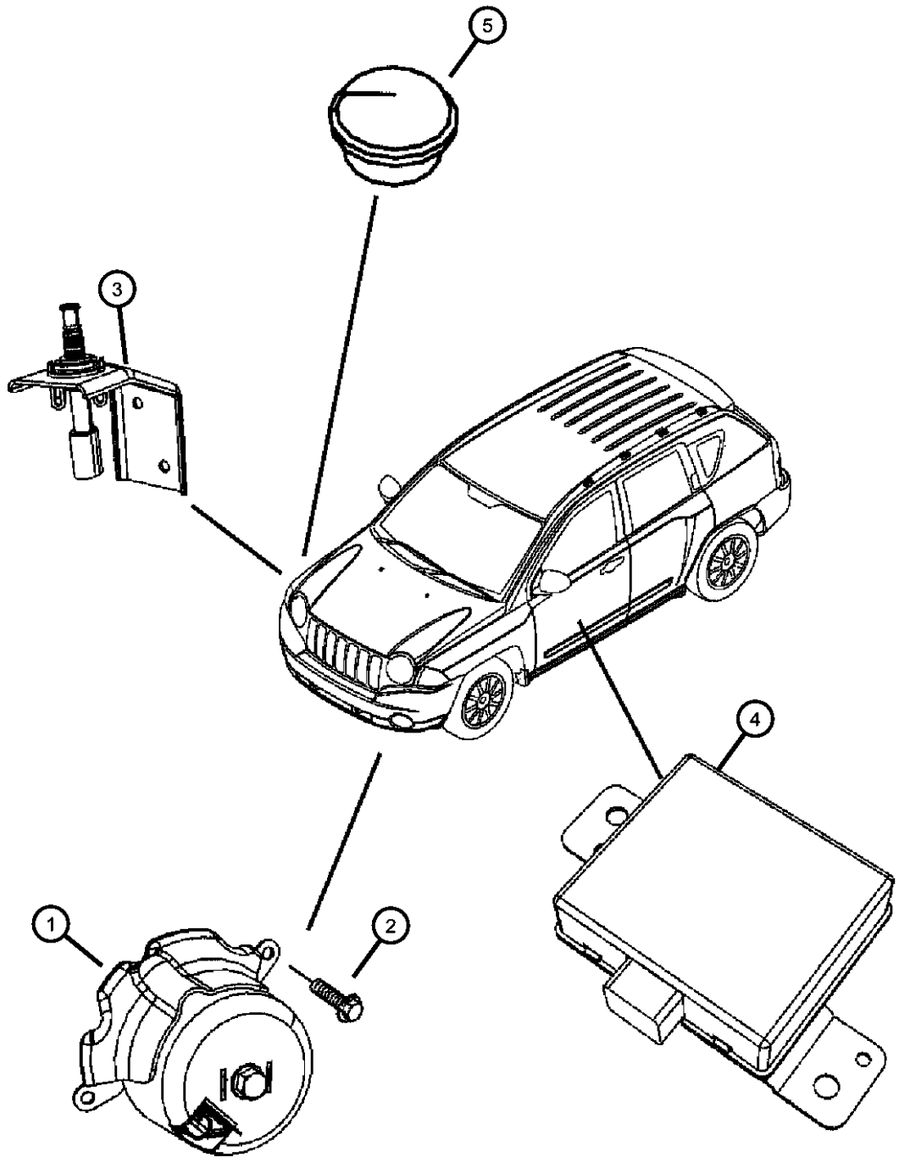

ITEM	PART NUMBER	QTY	LINE	SERIES	BODY	ENGINE	TRANS	TRIM	DESCRIPTION
1	04692034AB	1	J, T, U		49, 74				SIREN, Alarm
2	04692034AB	1							SCREW, Hex Head, M8, (NOT SERVICED)
3									SWITCH, Underhood
	05026276AA	1	J		49				
	05026295AA	1	J, T, U		74				
4									MODULE, Security Alarm
	05189810AA	1			74				
		1			49				
5	05026271AA	1	J		49				CAP, Protective, Hood security switch

COMPASS/PATRIOT (MK)

SERIES	LINE	BODY	ENGINE	TRANSMISSION
H = HIGHLINE L = LOWLINE P = PREMIUM	J = JEEP - 4WD T = JEEP - 2WD	49 = HATCHBACK TYPE #2 74 = SPORT UTILITY 4-DR TYPE #4	ED3 = 2.4L 4 Cyl DOHC 16V Dual VVT Engine	DD7 = 5-Speed Manual T355 Transmission DEF = 6-Speed Manual Aisin BG6 Trans DAV = Continuously Variable Transmission DAW = Cont.Var. w/Off-Rd Crawl Ratio Trans

AR = use ase required - = Non illustrrated part

Battery Tray And Cables
Figure 8-1010

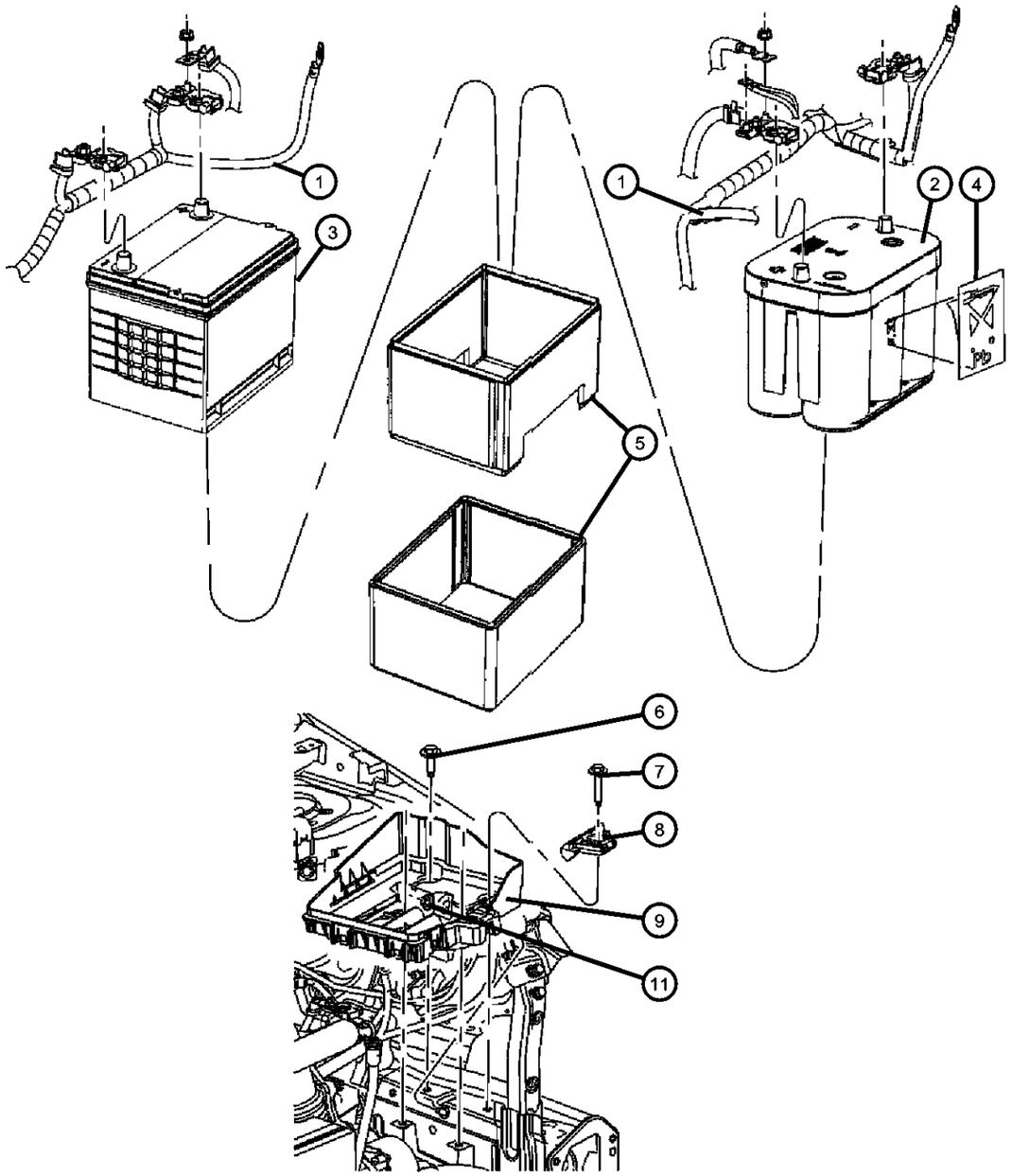

ITEM	PART NUMBER	QTY	LINE	SERIES	BODY	ENGINE	TRANS	TRIM	DESCRIPTION
1									WIRING, Battery
	04795318AE	1	J, T, U		49, 74	ED3			[X87]
	04801353AA	1	J, T, U		49, 74	ECD			
	04801329AC	1	J, T, U		49, 74	ED3			
2									BATTERY, Storage
	04868999AB	1	J, T, U		49				[BCV]
		1	J, T, U		74				[BCV]
3	56041380AD	1	J, T, U		49, 74				BATTERY, [BCP]
4									LABEL, Battery
	04606799AA	1	J, T, U		49, 74				[BCP,XLR]
	04606793AA	1	J, T, U		49, 74				[BCP+ABB]
5	05082107AB	1							COVER, Battery, [BCP]
6	06105103AA	4	J, T, U		49, 74				SCREW, Hex Head, M8x1.25x30.00, Battery Tray to Rail
7	06506502AA	1	J, T, U		49, 74				SCREW AND WASHER, Hex Head, Retainer to Battery Tray
8	05115732AA	1							RETAINER, BatteryMounting
9	05115731AA	1							TRAY, Battery
-10	06508538AA	1	J, T, U		49, 74				NUT, U Type, M8X1.25, Battery Tray to Mount
11	06104726AB	1	J, T, U		49, 74				NUT, Battery Tray to Rail, Mounting
-12									TERMINAL, Battery
	05161305AA	1				ED3			Positive
	05161517AA	1				ED3			Negative

COMPASS/PATRIOT (MK)

SERIES	LINE	BODY	ENGINE	TRANSMISSION
H = HIGHLINE L = LOWLINE P = PREMIUM	J = JEEP - 4WD T = JEEP - 2WD	49 = HATCHBACK TYPE #2 74 = SPORT UTILITY 4-DR TYPE #4	ED3 = 2.4L 4 Cyl DOHC 16V Dual VVT Engine	DD7 = 5-Speed Manual T355 Transmission DEF = 6-Speed Manual Aisin BG6 Trans DAV = Continuously Variable Transmission DAW = Cont.Var. w/Off-Rd Crawl Ratio Trans

AR = use ase required - = Non illustrrated part

Lamps, Front
Figure 8-1110

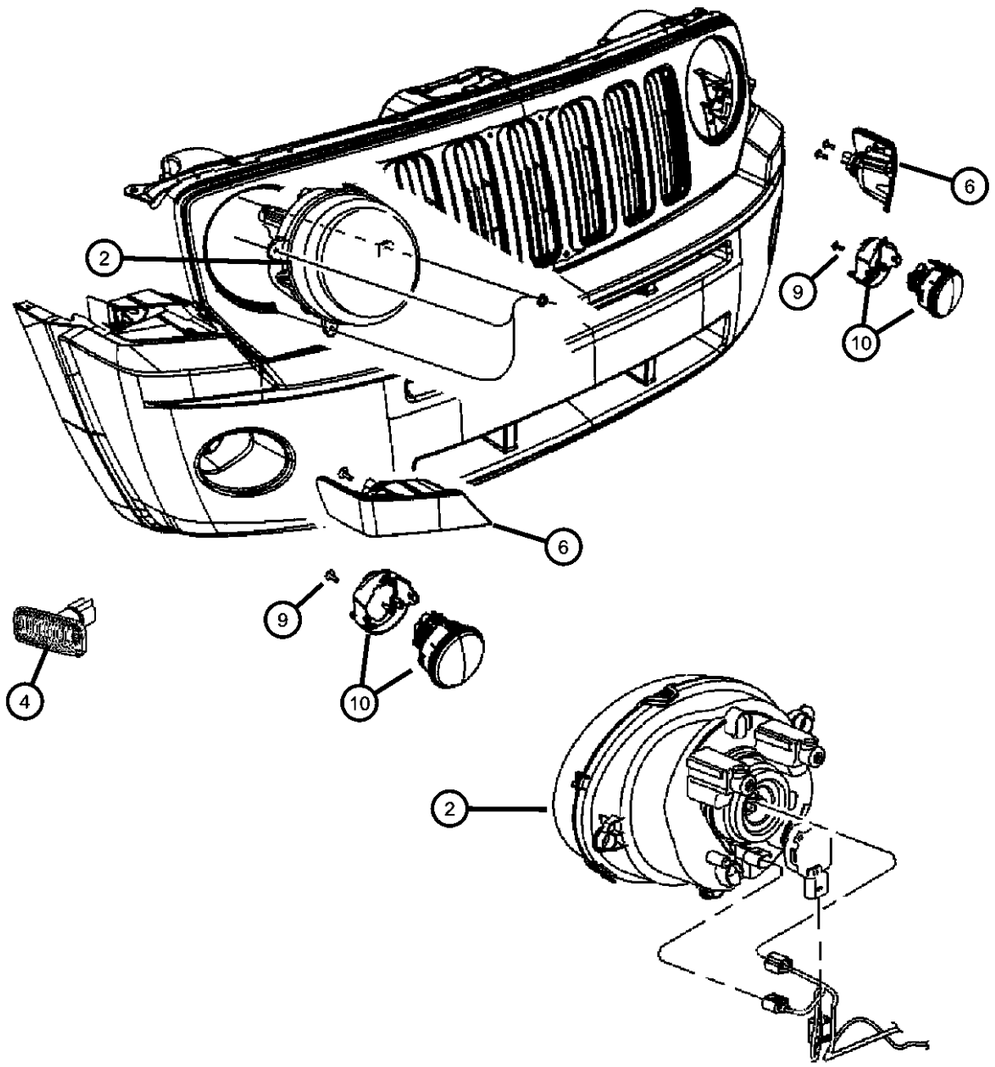

ITEM	PART NUMBER	QTY	LINE	SERIES	BODY	ENGINE	TRANS	TRIM	DESCRIPTION
NOTE:See 8 1120 for Bulbs									
-1	06104725AA	6	J, T, U		49, 74				NUT AND WASHER, M6x1
2									HEADLAMP
	05303842AA	1	J, T		49, 74				Right
	LBK11702								Light Bulb Kit (Assorted Bulbs and Fuses)
	05303843AA	1	J, T		49, 74				Left
	LBK11702								Light Bulb Kit (Assorted Bulbs and Fuses)
	05303874AA	1	J, T		49, 74				[LML], Right
	LBK01703								Light Bulb Kit (Assorted Bulbs and Fuses)
	05303875AA	1	J, T		49, 74				[LML], Left
	LBK01703								Light Bulb Kit (Assorted Bulbs and Fuses)
	05303876AA	1	U		49, 74				Right
	05303877AA	1	U		49, 74				Left
-3									BULB, Headlamp
	L0000H13	1	J, T		49, 74				
	L00H460W	1	J, T		49, 74				[LMA] Small bulb, Export
4	04806224AD	2	J, T, U		49, 74				LAMP, Side RepeaterExport
-5	L000WY5W	2	J, T, U		49, 74				BULB, 12V 5W
6									LAMP, Park and Turn Signal
	68000682AA	1	J, T, U		49				Right
	68000683AA	1	J		49				Left
	68004180AA	1	J, T, U		74				Right
	68004181AA	1	J, T, U		74				Left
-7									SOCKET, Park And Turn Signal
	68000686AA	1	J, T, U		49				
		1	J, T, U		74				
-8									BULB, 3757NAKPY27W/7W
	L003757NAK	1	J, T, U		74				
		1	J, T, U		49				
9	06506579AA	3	J, T, U		74				SCREW, Tapping, M6X2.69X21.55, Park lamp to fascia

COMPASS/PATRIOT (MK)

SERIES	LINE	BODY	ENGINE	TRANSMISSION
H = HIGHLINE L = LOWLINE P = PREMIUM	J = JEEP - 4WD T = JEEP - 2WD	49 = HATCHBACK TYPE #2 74 = SPORT UTILITY 4-DR TYPE #4	ED3 = 2.4L 4 Cyl DOHC 16V Dual VVT Engine	DD7 = 5-Speed Manual T355 Transmission DEF = 6-Speed Manual Aisin BG6 Trans DAV = Continuously Variable Transmission DAW = Cont.Var. w/Off-Rd Crawl Ratio Trans

Lamps, Front
Figure 8-1110

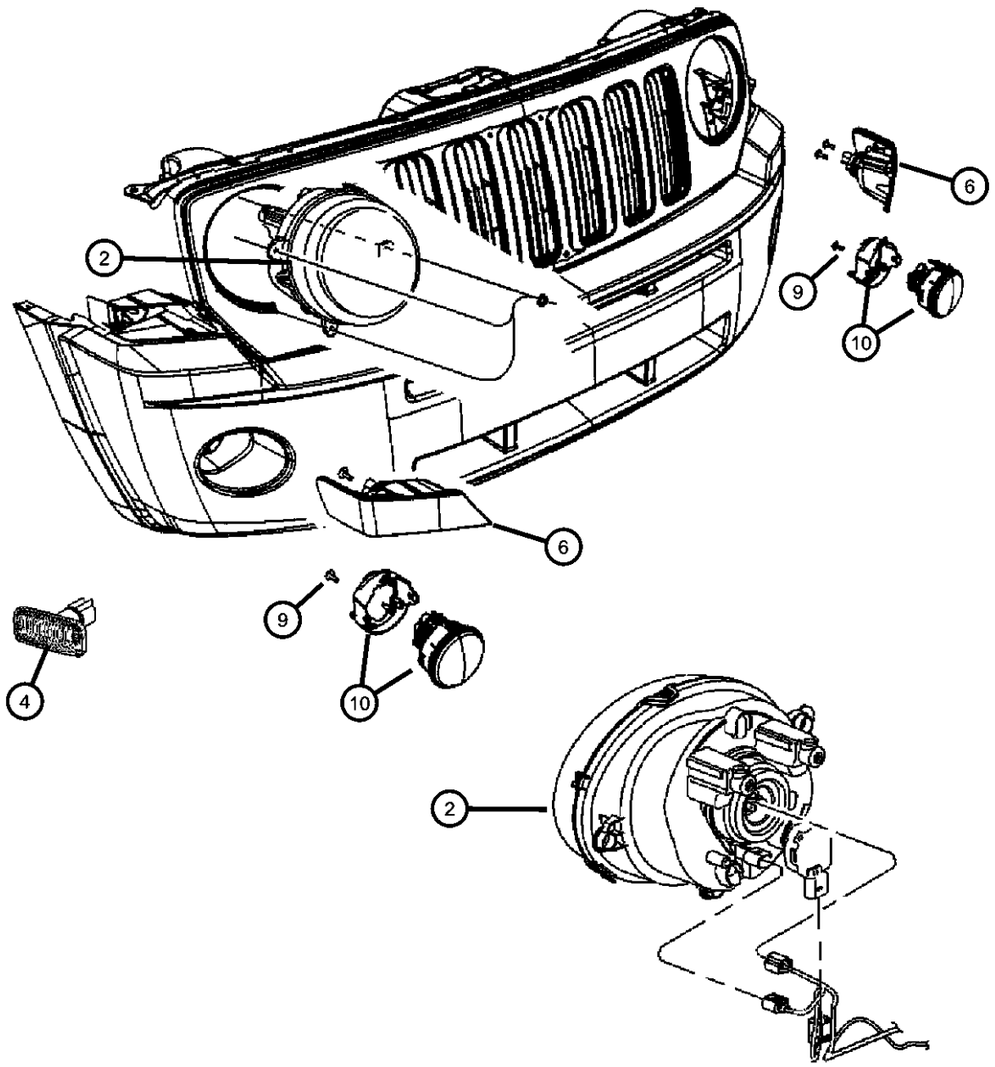

ITEM	PART NUMBER	QTY	LINE	SERIES	BODY	ENGINE	TRANS	TRIM	DESCRIPTION
10									LAMP, Fog
	04805857AA	2	J, T, U		74				
		2	J, T, U		49				
-11									BULB, Fog Lamp, 50 Watt
	L0009145	2	J, T, U		49				
		2	J, T, U		74				

COMPASS/PATRIOT (MK)

SERIES	LINE	BODY	ENGINE	TRANSMISSION
H = HIGHLINE L = LOWLINE P = PREMIUM	J = JEEP - 4WD T = JEEP - 2WD	49 = HATCHBACK TYPE #2 74 = SPORT UTILITY 4-DR TYPE #4	ED3 = 2.4L 4 Cyl DOHC 16V Dual VVT Engine	DD7 = 5-Speed Manual T355 Transmission DEF = 6-Speed Manual Aisin BG6 Trans DAV = Continuously Variable Transmission DAW = Cont.Var. w/Off-Rd Crawl Ratio Trans

Lamps, Rear
Figure 8-1120

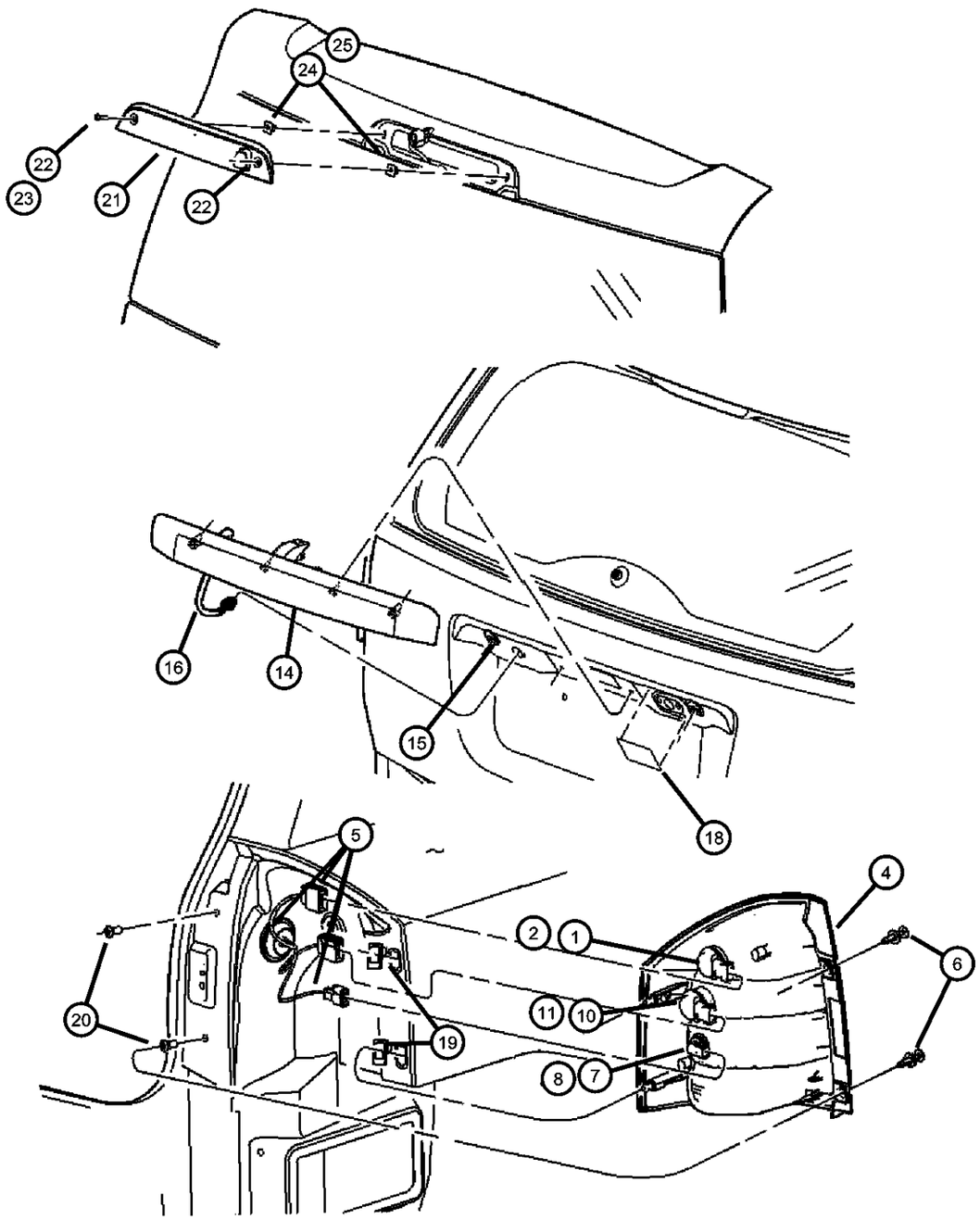

ITEM	PART NUMBER	QTY	LINE	SERIES	BODY	ENGINE	TRANS	TRIM	DESCRIPTION
NOTE: See 8 1120 for Bulbs									
1	68014978AA	1	J, T, U		74				SOCKET, Lamp, Stop lamp
2	05191192AA	2	J, T, U		49				SOCKET, Stop and Tail Lamp
-3									BULB, 3157
	L0003157	1	J, T, U		74				
		2	J, T, U		49				
4									LAMP, Tail Stop Turn Sidemarker
	05116238AB	1	J, T, U		74				Right
	05116239AB	1	J, T, U		74				Left
	05116240AB	1	J, T, U		74				Export, Right
	05116241AB	1	J, T, U		74				Export, Left
	05303878AA	1	J, T, U		49				Right
	05303879AA	1	J, T, U		49				Left
	05303882AA	1	J, T, U		49				Export, Right
	05303883AA	1	J, T, U		49				Export, Left
5	68014985AA	1	J, T, U		74				WIRING, Tail Lamp
6	05160260AA	4	J		49				PIN, Push, Taillamp attaching
7	68014979AA	1	J, T, U		74				SOCKET, Lamp, Turn signal
8	05191194AA	1	J, T, U		49				SOCKET, Back-Up Lamp
-9									BULB, 921
	L000921E	1	J, T, U		74				
		1	J, T, U		49				
10	68014981AA	1	J, T, U		74				SOCKET, Lamp, Backup lamp
11	05191193AA	1	J, T, U		49				SOCKET, Turn Signal Lamp
-12	L003757A	1	J, T, U		74				BULB, 3757APY27/7W, Turn signal
-13	L0003157	1	J, T, U		74				BULB, 3157
14									HANDLE, Liftgate
	0ZH33AJCAC	1	J, T, U		49, 74				[JC]
	0ZH33ARHAC	1	J, T, U		49, 74				[RH][MPN]
	0ZH33DB-MAC	1	J, T, U		49, 74				[BM][MPN]
	0ZH33DX8AC	1	J, T, U		49, 74				[X8][MPN]
	0ZH33EGJAC	1	J, T, U		49, 74				[GJ][MPN]

COMPASS/PATRIOT (MK)

SERIES	LINE	BODY	ENGINE	TRANSMISSION
H = HIGHLINE L = LOWLINE P = PREMIUM	J = JEEP - 4WD T = JEEP - 2WD	49 = HATCHBACK TYPE #2 74 = SPORT UTILITY 4-DR TYPE #4	ED3 = 2.4L 4 Cyl DOHC 16V Dual VVT Engine	DD7 = 5-Speed Manual T355 Transmission DEF = 6-Speed Manual Aisin BG6 Trans DAV = Continuously Variable Transmission DAW = Cont.Var. w/Off-Rd Crawl Ratio Trans

Lamps, Rear
Figure 8-1120

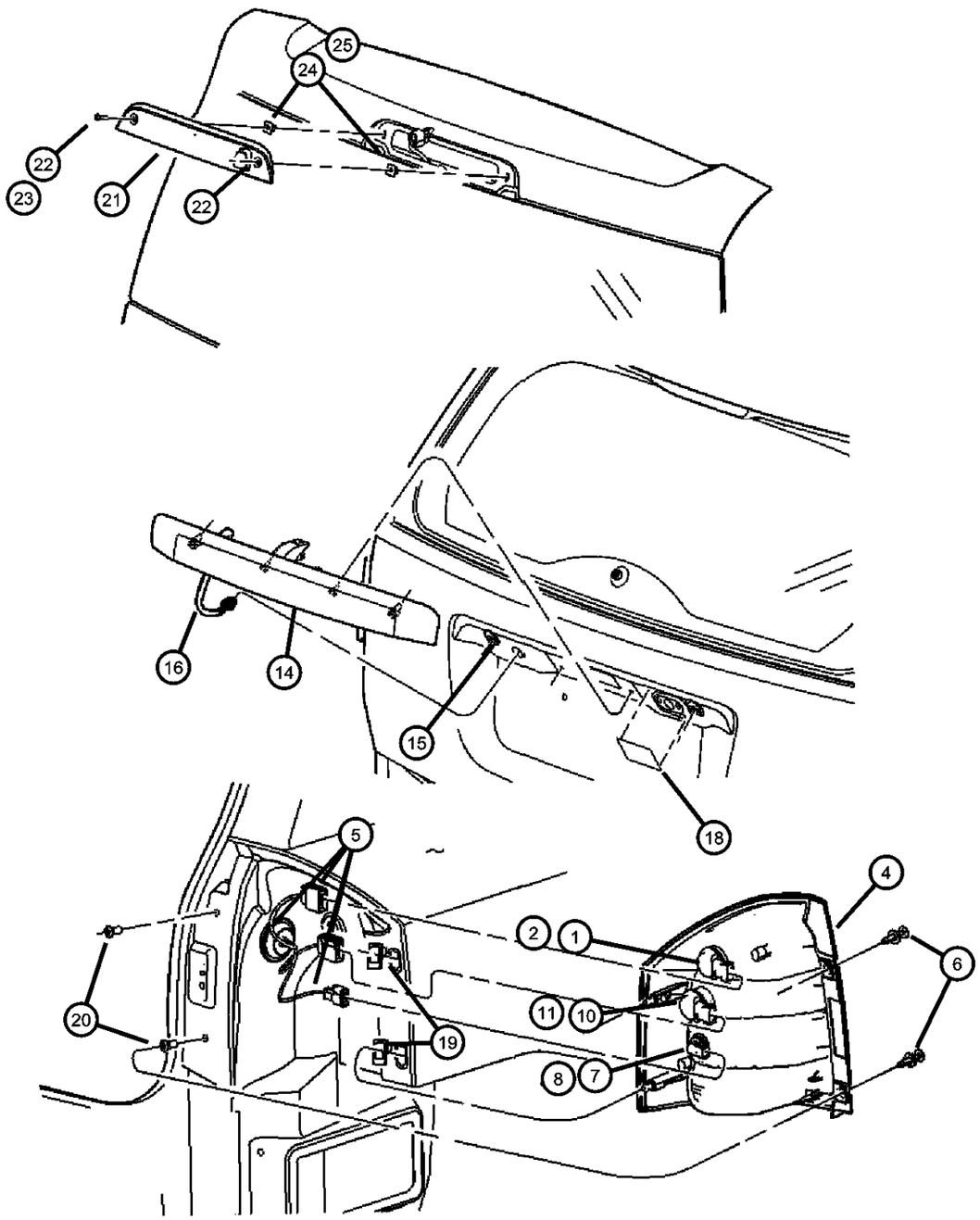

ITEM	PART NUMBER	QTY	LINE	SERIES	BODY	ENGINE	TRANS	TRIM	DESCRIPTION
	0ZH33SW1AC	1	J, T, U		49, 74				[W1][MPN]
	0ZH33WS2AC	1	J, T, U		49, 74				[S2][MPN]
	0ZH33CB6AD	1	J, T, U		49, 74				[B6][MPM]
	0ZH34RXFAC	1	J, T, U		49, 74				[MPM]
15	68001375AA	2	J, T, U		49, 74				CLIP, Retaining, Handle to liftgate
16	68001368AA	1	J, T, U		49, 74				WIRING, License Lamp
-17	L002825W5W	2	J, T, U		49, 74				BULB, W10/5
18									LENS, License Lamp
	68001366AA	1	J, T, U		49, 74				Right
		1	J		49				Right
	68001367AA	1	J		49				Left
		1	J, T, U		49, 74				Left
19	04806271AA	4	J, T, U		49, 74				GROMMET
20	05160255AB	4	J, T, U		49, 74				GROMMET, Lamp, Taillamp mounting to apperature
21									LAMP, Liftgate Chmsl
	05116236AB	1	J, T, U		74				
	05303754AB	1	J, T, U		49				
22	06104635AB	2	J, T, U		74				SCREW, CHMSL attaching
23	06036163AA	2	J, T, U		49				SCREW, .19-16x1.00, CHMSL to spoiler
24	06035211	2	J, T, U		74				NUT, Snap In, CHMSL attaching
25	06507341AA	2	J, T, U		49				NUT, U-Type, For M4.8x1.59 Screw, CHMSL to spoiler

COMPASS/PATRIOT (MK)

SERIES	LINE	BODY	ENGINE	TRANSMISSION
H = HIGHLINE L = LOWLINE P = PREMIUM	J = JEEP - 4WD T = JEEP - 2WD	49 = HATCHBACK TYPE #2 74 = SPORT UTILITY 4-DR TYPE #4	ED3 = 2.4L 4 Cyl DOHC 16V Dual VVT Engine	DD7 = 5-Speed Manual T355 Transmission DEF = 6-Speed Manual Aisin BG6 Trans DAV = Continuously Variable Transmission DAW = Cont.Var. w/Off-Rd Crawl Ratio Trans

Courtesy Lamps
Figure 8-1130

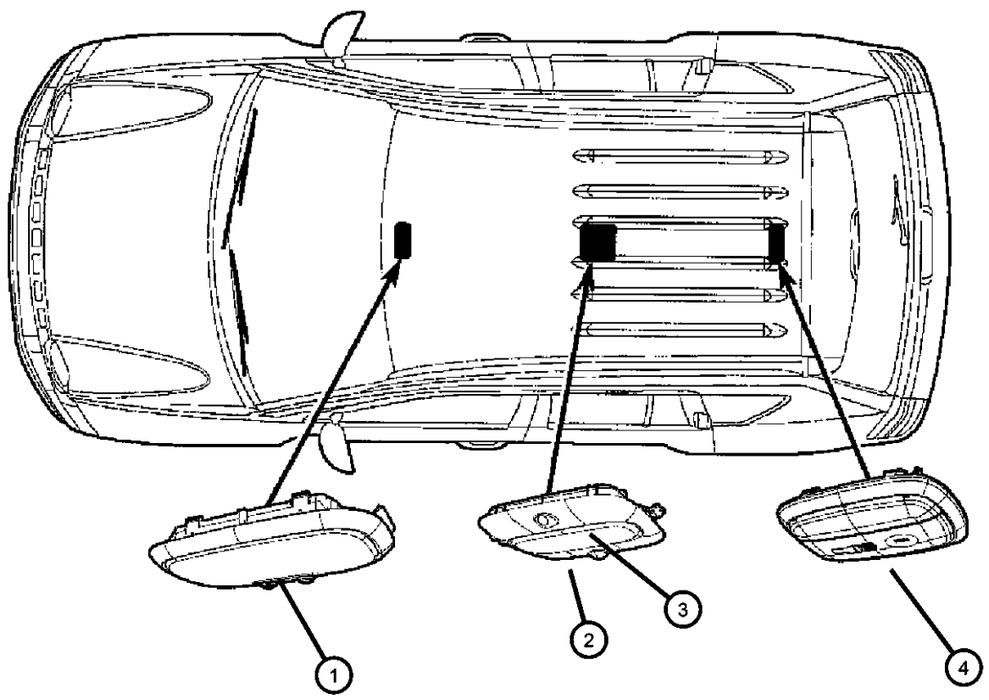

ITEM	PART NUMBER	QTY	LINE	SERIES	BODY	ENGINE	TRANS	TRIM	DESCRIPTION
NOTE: See 8 1120 for Bulbs									
1									LAMP, Reading
	1AN73DW1AD	1	J, T, U		74				
		1	J, T, U		49				
	1CJ11DW1AA	1	J, T, U		49				[GWG]
		1	J, T, U		74				[GWG]
2									LAMP, Dome
	05183445AA	1	J, T, U		74				[LCD]
		1	J, T, U		49				[LCD]
	5JG55DW1AB	1	J, T, U		49				[LCK]
	5JG55DW1AD	1	J, T, U		74				[LCK]
3									LENS, Dome Lamp
	05093413AA	1	J, T, U		74				[LCK]
		2	J, T, U		49				[LCK]
	05183449AA	1	J, T, U		74				[LCD]
		1	J		49				[LCD]
4									FLASHLIGHT
	05183459AA	1	J, T, U		74				
		1	J		49				
-5									BATTERY, Flashlight
	05183454AA	1	J, T, U		74				
		1	J, T, U		49				

COMPASS/PATRIOT (MK)

SERIES	LINE	BODY	ENGINE	TRANSMISSION
H = HIGHLINE L = LOWLINE P = PREMIUM	J = JEEP - 4WD T = JEEP - 2WD	49 = HATCHBACK TYPE #2 74 = SPORT UTILITY 4-DR TYPE #4	ED3 = 2.4L 4 Cyl DOHC 16V Dual VVT Engine	DD7 = 5-Speed Manual T355 Transmission DEF = 6-Speed Manual Aisin BG6 Trans DAV = Continuously Variable Transmission DAW = Cont.Var. w/Off-Rd Crawl Ratio Trans

LAMPS/LIGHTING - EXTERIOR

BULB APPLICATION TABLE

LAMP	BULB
BACKUP	921 (W16W) (1)
BRAKE	3157 (P27W/7W) (7)
CENTER HIGH MOUNTED STOP	LIGHT-EMITTING DIODES SERVICED IN ASSEMBLY
FRONT FOG	9145 (H10) (2)
FRONT PARK	3757KA (PY27W/7W) (3)
FRONT SIDE MARKER	3757KA (PY27W/7W) (3)
FRONT TURN SIGNAL	3757KA (PY27W/7W) (3)
HEADLAMP	9008 (H13) - DOMESTIC 9003 (H4 60/55W) - EXPORT (5)
LICENSE PLATE	W5W (4)
POSITION (EXPORT ONLY)	W5W
REAR FOG (EXPORT ONLY)	3157 (P27W/7W) (7)
REAR PARK	3157 (P27W/7W) (7)
REAR SIDE MARKER	3157 (P27W/7W) (7)
REAR TURN SIGNAL	3757A (PY27W/7W) (10)
REPEATER (EXPORT ONLY)	WY5W (6)

LAMPS/LIGHTING - INTERIOR

COURTESY LAMPS

BULB APPLICATION TABLE

LAMP	BULB
FRONT DOME	578 (9)
FRONT MAP/READING	212–2
REAR DOME	212–2
CARGO (WITHOUT REMOVABLE FLASHLIGHT FEATURE)	578 (9)
CARGO (WITH REMOVABLE FLASHLIGHT FEATURE)	C5W

PANEL LAMPS

BULB APPLICATION TABLE

LAMP	BULB
GEAR SELECTOR BEZEL	37 (8)

ITEM	PART NUMBER	QTY	LINE	SERIES	BODY	ENGINE	TRANS	TRIM	DESCRIPTION
1									BULB, 921
	L000921E	1	J, T, U		49				
		1	J, T, U		74				
2									BULB, Fog Lamp, 50 Watt
	L0009145	2	J, T, U		49				
		2	J, T, U		74				
3	L003757A	1	J, T, U		74				BULB, 3757APY27/7W
4	L000WY5W	2	J, T, U		49, 74				BULB, 12V 5W, Side Repeater, Front
5									BULB, Headlamp
	L0000H13	1	J, T		49, 74				
	L00H460W	1	J, T		49, 74				[LML]
6	L002825W5W	2	J, T, U		49, 74				BULB, W10/5
7									BULB, 3157
	L0003157	1	J, T, U		74				
		2	J, T, U		49				
8	L0000037	1	J, T, U		49, 74		DD7, DEF		BULB, 37
9									BULB, 578
	L0000578	1	J, T, U		74				
		2	J, T, U		49				
10	L0003757AK	1	J, T, U		49				BULB, 3757AKPY27/7WK
-11	L0000194	1					DAV, DAW		BULB, 194, Shift indicator
-12									BULB KIT
	LBK01703	1							Consist of L00H460W BULB - HEADLAMP L0003757AK BULB - NONE L0003157 BULB - NONE 000ATM10 FUSE - MINI 000ATM15 FUSE - MINI 000ATM20 FUSE - MINI 000ATM25
	LBK11702	1							Consist of L0000H13 BULB - HEADLAMP L0003757AK BULB - NONE L0003157 BULB - NONE 000ATM10 FUSE - MINI 000ATM15 FUSE - MINI 000ATM20 FUSE - MINI 000ATM25 FUS

COMPASS/PATRIOT (MK)

SERIES	LINE	BODY	ENGINE	TRANSMISSION
H = HIGHLINE L = LOWLINE P = PREMIUM	J = JEEP - 4WD T = JEEP - 2WD	49 = HATCHBACK TYPE #2 74 = SPORT UTILITY 4-DR TYPE #4	ED3 = 2.4L 4 Cyl DOHC 16V Dual VVT Engine	DD7 = 5-Speed Manual T355 Transmission DEF = 6-Speed Manual Aisin BG6 Trans DAV = Continuously Variable Transmission DAW = Cont.Var. w/Off-Rd Crawl Ratio Trans

Wiring Powertrain and Transmission
Figure 8-1210

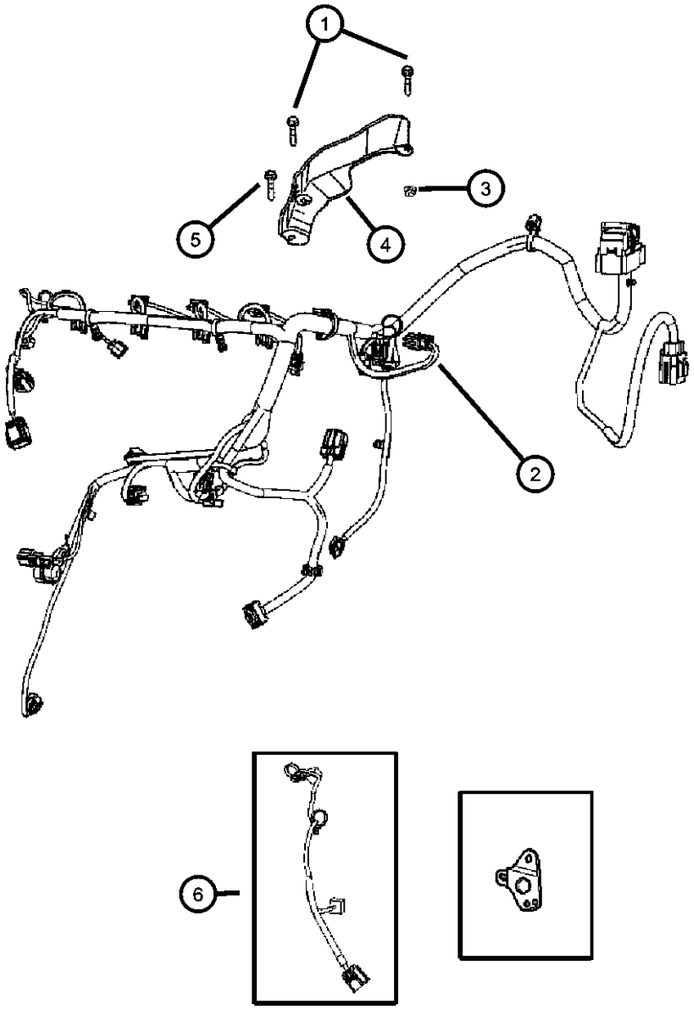

ITEM	PART NUMBER	QTY	LINE	SERIES	BODY	ENGINE	TRANS	TRIM	DESCRIPTION
1	LBK11702	1							SCREW, Hex Flange Head, M6x1.0x16.0, (NOT SERVICED),
2									WIRING, Powertrain
	04795312AF	1				ED3			
	04795485AD	1	J, T, U		49, 74	ECD			
3	06101447	1	J, T, U		49, 74	ED3			NUT AND WASHER, M6x1.00, Heat shield attacjing
4	04795259AD	1	J, T, U		49, 74	ED3			SHIELD, Wiring
5	06101799	1				ED3			BOLT AND WASHER, Hex Head, M8x1.25x20, Heat shield attacjing
6	04795865AF	1	J, T		49, 74		DAV		WIRING, Transmission
-7									BRACKET, Wiring
	04795876AB	1	J, T, U		49, 74		DAV		Trans wiring
	05273453AA	1	J, U		49, 74				

COMPASS/PATRIOT (MK)

SERIES	LINE	BODY	ENGINE	TRANSMISSION
H = HIGHLINE L = LOWLINE P = PREMIUM	J = JEEP - 4WD T = JEEP - 2WD	49 = HATCHBACK TYPE #2 74 = SPORT UTILITY 4-DR TYPE #4	ED3 = 2.4L 4 Cyl DOHC 16V Dual VVT Engine	DD7 = 5-Speed Manual T355 Transmission DEF = 6-Speed Manual Aisin BG6 Trans DAV = Continuously Variable Transmission DAW = Cont.Var. w/Off-Rd Crawl Ratio Trans

AR = use ase required - = Non illustrrated part

Ground Straps
Figure 8-1215

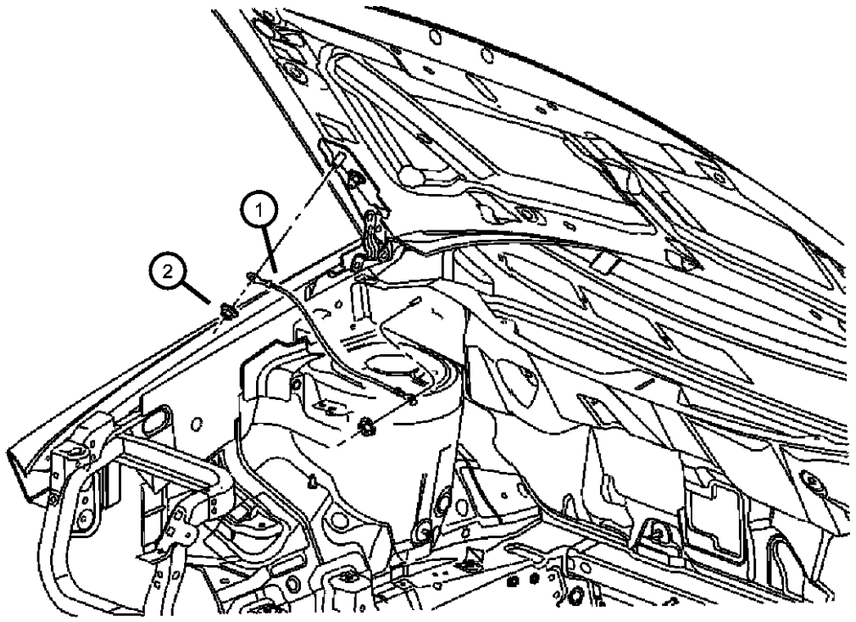

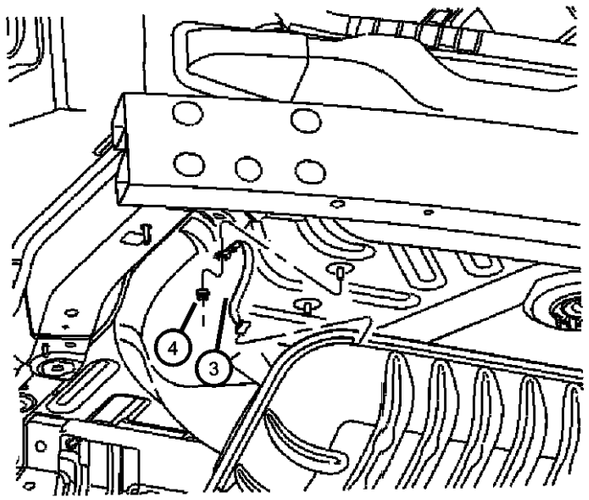

ITEM	PART NUMBER	QTY	LINE	SERIES	BODY	ENGINE	TRANS	TRIM	DESCRIPTION
1									STRAP, Ground
	04671169AC	1	J, T, U		49				Hood hinge to body
	05064557AA	1	J, T, U		74				Hood hinge to body
2	06101809	1							NUT AND WASHER, Hex, M8x1.25
3	04672308AA	1	J, T, U		49, 74				STRAP, Ground, Exhaust to body
4	06101809	1							NUT AND WASHER, Hex, M8x1.25
-5	04672303AB	1	J, T, U		49, 74				STRAP, Ground, Cylinder head to heat shield

COMPASS/PATRIOT (MK)

SERIES	LINE	BODY	ENGINE	TRANSMISSION
H = HIGHLINE L = LOWLINE P = PREMIUM	J = JEEP - 4WD T = JEEP - 2WD	49 = HATCHBACK TYPE #2 74 = SPORT UTILITY 4-DR TYPE #4	ED3 = 2.4L 4 Cyl DOHC 16V Dual VVT Engine	DD7 = 5-Speed Manual T355 Transmission DEF = 6-Speed Manual Aisin BG6 Trans DAV = Continuously Variable Transmission DAW = Cont.Var. w/Off-Rd Crawl Ratio Trans

Wiring Engine Compartment
Figure 8-1305

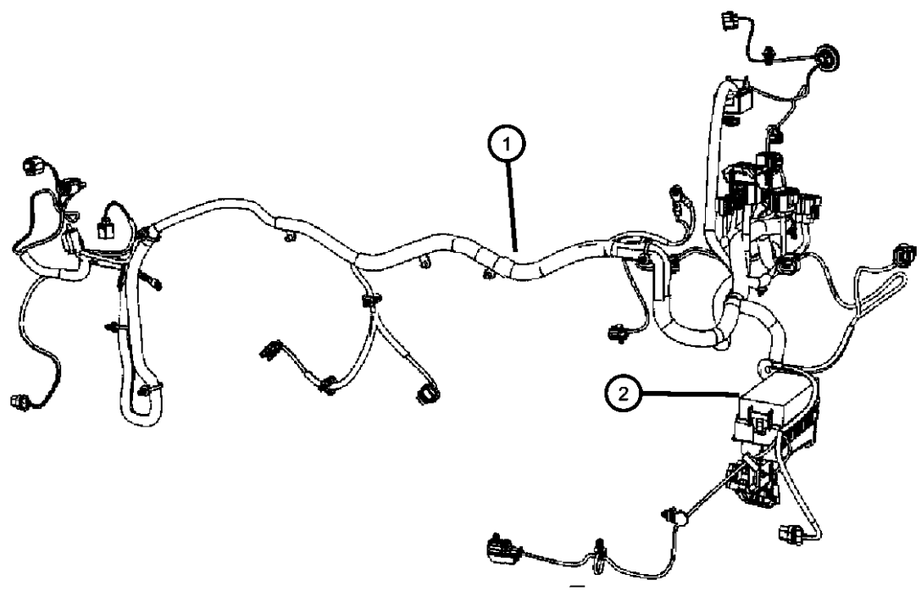

ITEM	PART NUMBER	QTY	LINE	SERIES	BODY	ENGINE	TRANS	TRIM	DESCRIPTION
1									WIRING, Engine Compartment
	04795898AD	1	J, T		49		DEF		[ABB]
	04795899AD	1	U		49		DEF		[CG1]
	04795901AD	1	J, T		49		DAV, DD7		[ABB]
	04795902AA	1	T, J		49		DAV, DD7		[CG1,LNJ,LMF] Korea
		1	J, T		74		DAV, DD7		[CG1,LNJ,LMF] Korea
	04795910AD	1	U		49		DAV, DD7		Base
	05084169AB	1	J, T		74		DAV, DD7		[CG1]
	05084170AB	1	J, T		74		DAV, DD7		[CG1,NHM]
	05084171AB	1	J, T		74		DAW		[CG1]
	05084172AB	1	J, T		74		DAW		[CG1,LNJ]
	05084226AB	1	J, T		49				[CG1]
	05084230AB	1	J, T		49				[CGJ]
	05084643AA	1	J, T		74		DAV, DD7		[CG1,LMF,JKL,LSC]
	05084644AA	1	J, T		74		DEF		[CG1]
	05084645AA	1	U		74		DEF		[CG1]
	05084646AA	1	U		74		DAV, DD7		[CG1,LMF,JKL,LSC]
	05084739AA	1	J, T		74		DAV, DD7		[CG1,LNJ]
	05084744AA	1	J, T		74		DEF		[CG1,LNJ]
	05084745AA	1	U		74		DEF		[CG1,LNJ]
	05084746AA	1	U		74		DAV, DD7		[CG1,LNJ,LMF]
	05084741AA	1	J, T		74		DAV, DD7		[CG1,LNJ,LMF]
	05084742AA	1	J, T		74				[CGJ]
	05084743AA	1	J, T		74				[CGJ,LNJ]
2	68001818AA	1	J, T, U		49, 74				COVER, Totally Integrated Power Module

COMPASS/PATRIOT (MK)

SERIES	LINE	BODY	ENGINE	TRANSMISSION
H = HIGHLINE L = LOWLINE P = PREMIUM	J = JEEP - 4WD T = JEEP - 2WD	49 = HATCHBACK TYPE #2 74 = SPORT UTILITY 4-DR TYPE #4	ED3 = 2.4L 4 Cyl DOHC 16V Dual VVT Engine	DD7 = 5-Speed Manual T355 Transmission DEF = 6-Speed Manual Aisin BG6 Trans DAV = Continuously Variable Transmission DAW = Cont.Var. w/Off-Rd Crawl Ratio Trans

Wiring, Instrument Panel
Figure 8-1410

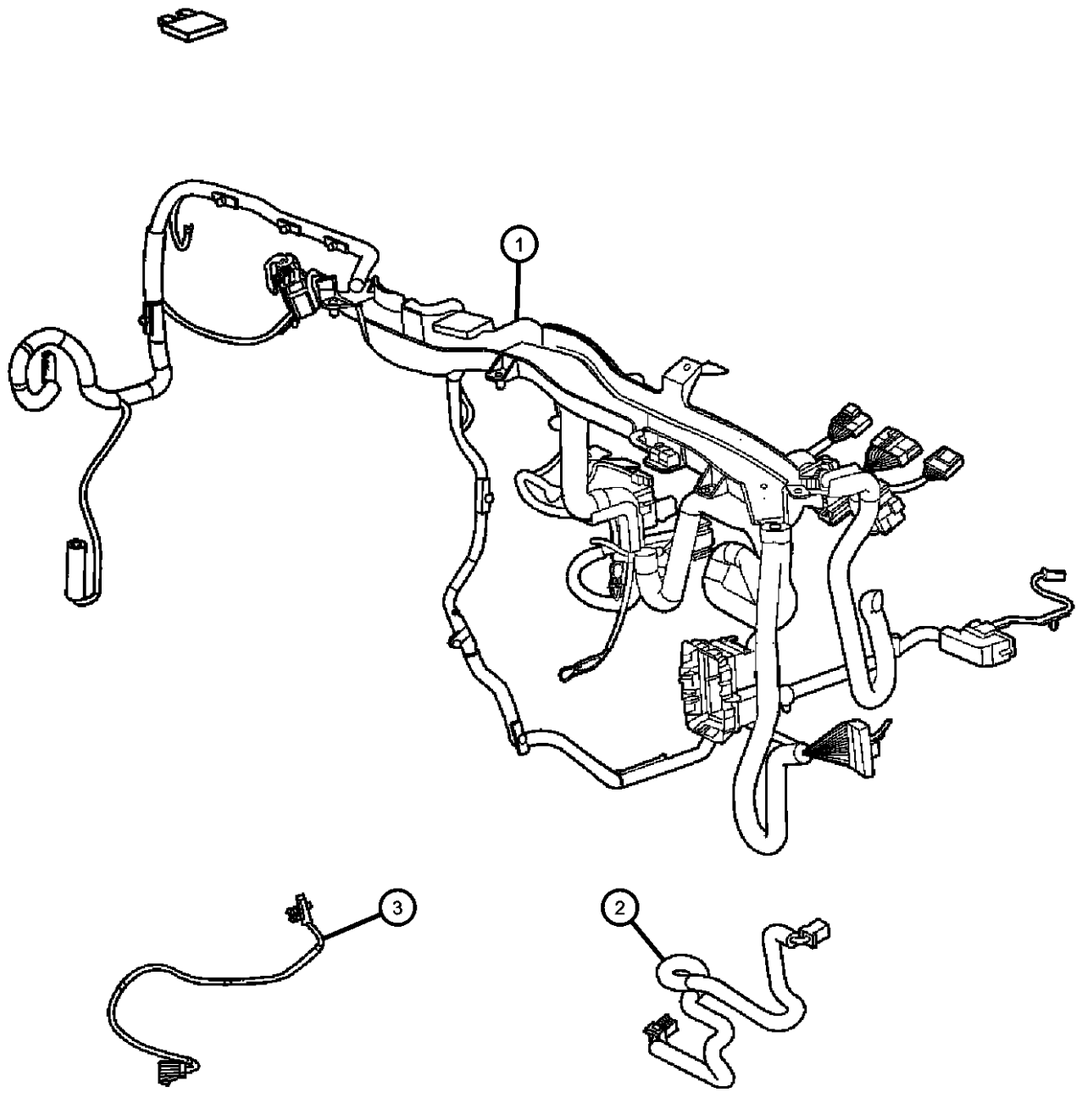

ITEM	PART NUMBER	QTY	LINE	SERIES	BODY	ENGINE	TRANS	TRIM	DESCRIPTION
1									WIRING, Instrument Panel
	04795904AC	1	J, T		49, 74				[CG1,JPH,JKV]
	04795905AC	1	J, T		49, 74				[CG1,GWG]
	04795906AC	1	J, T		49, 74		DAV		[CG1,ABB]
	04795907AC	1	J, T		49, 74		DD7, DEF		[CG1,ABB]
	04795908AC	1	U		49				[CG1]
	05084092AA	1	J, T		49				[X81,RD8]
		1	J, T		74				[X81,RD8]
	05084100AC	1	J, T		49, 74				[CG1,AJV]
	05084176AB	1	J, T		49, 74				[CG1]
	05084090AA	1	J, T		49, 74				Base, Export
	05084178AB	1	J, T		49, 74				[CG1,GWG,DHD]
	05084177AB	1	J, T		49, 74				[CG1,AJV,GWG]
	05084181AB	1	J, T		49, 74				[CG1,RSP,GWG]
	05084179AB	1	J, T		49, 74				[CG1,RSP,AJV]
	05084180AB	1	J, T		49, 74				[CG1,GWG,DHD,AJV]
	05084681AA	1	J, T		49, 74				[CG1,DHD,AJV]
	05084182AB	1	J, T		49, 74				[CG1,RSP,DHD]
	05084187AB	1	J, T		49, 74				[CGJ,DHD,XGM,GNK,XGD,JFJ] Mexico
	05084682AA	1	J, T		49, 74				[CG1,DHD]
2									WIRING, Jumper
	05084601AE	1	J		49				[NA1] Differential Vent Jumper Assembly
	05084600AE	1	J		49				[NAA,NAE] Differential Vent Jumper Assembly
3									WIRING, Steering Wheel
	68018160AB	1	J, T, U		49, 74				
	68000462AB	1	J, T, U		49, 74				[NHM]
-4	05064236AA	1							WIRING, Jumper, Message center

COMPASS/PATRIOT (MK)

SERIES	LINE	BODY	ENGINE	TRANSMISSION
H = HIGHLINE L = LOWLINE P = PREMIUM	J = JEEP - 4WD T = JEEP - 2WD	49 = HATCHBACK TYPE #2 74 = SPORT UTILITY 4-DR TYPE #4	ED3 = 2.4L 4 Cyl DOHC 16V Dual VVT Engine	DD7 = 5-Speed Manual T355 Transmission DEF = 6-Speed Manual Aisin BG6 Trans DAV = Continuously Variable Transmission DAW = Cont.Var. w/Off-Rd Crawl Ratio Trans

AR = use ase required - = Non illustrrated part

Wiring,Unibody
Figure 8-1505

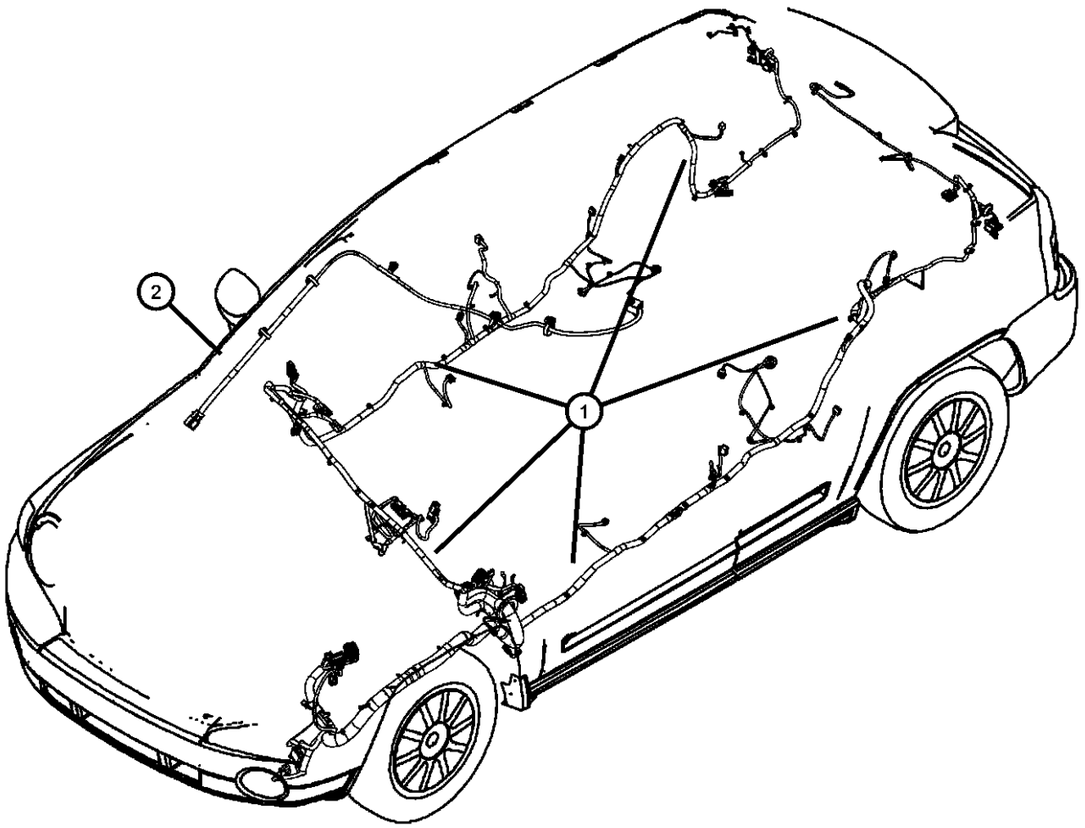

ITEM	PART NUMBER	QTY	LINE	SERIES	BODY	ENGINE	TRANS	TRIM	DESCRIPTION
1									WIRING, Unified Body
	04795781AB	1	T		49, 74		DAV, DAW		[CGJ,XGM]
	04795782AB	1	T		49, 74		DD7		[CGJ]
	04795783AB	1	T		49, 74		DD7		[CGJ,XGM]
	04795360AA	1	J		49, 74		DAW, DAV		[CG1,XGM,CJ4,LMF]
	04795780AB	1	T		49, 74		DAV		[CGJ]
	04795799AC	1	J		49		DAV, DAW		[CG1,ABB,XGM]
	04795788AC	1	J		49		DAV, DAW		[CG1.CJ4]
	04795789AC	1	J		49		DD7		[CG1,XGM,CJ4]
	04795790AB	1	J		49		DD7		[CG1.CJ4]
	04795791AB	1	J		49		DD7		[CG1.CJ4,RFS]
	04795793AC	1	J		49		DD7		[CG1,XGM,CJ4,RFS]
		1	J		49, 74		DAV, DAW		[CG1,ABB,XGM]
	04795800AB	1	J		49, 74		DAV, DAW		[CGJ]
	04795801AB	1	J		49		DAV		[CGJ,XGM]
	04795802AC	1	J		49		DAV, DAW		[CG1,ABB,XGM,RFS]
		1	J		49		DAV		[CG1,ABB,XGM]
		1	J		49, 74		DAV, DAW		[CG1,ABB,XGM,RFS]
	04795803AC	1	J		49		DD7		[CG1,ABB,XGM]
		1	J		49, 74		DD7		[CG1,ABB,XGM]
	04795911AC	1	J		49		DD7		[CG1,ABB,CGM,RFS]
		1	J		49, 74		DD7		[CG1,ABB,XGM,RFS]
	04795969AC	1	J		49		DEF		[CG1,ABB,CGM]
		1	J		49, 74		DEF		[CG1,ABB,XGM]
	04795970AC	1	J		49		DEF		[CG1,ABB,CGM,RFS]
		1	J		49, 74		DEF		[CG1,ABB,XGM,RFS]
	04795971AC	1	U		49		DAV, DAW		[CG1,XGM]
		1	U		49, 74		DAV, DAW		[CG1,XGM]
	04795972AC	1	U		49		DAV, DAW		[CG1,XGM,RFS]
		1	U		49, 74		DAV, DAW		[CG1,XGM,RFS]
	04795973AC	1	U		49		DD7		[CG1,XGM]
		1	U		49, 74		DD7		[CG1,XGM]
	04795974AC	1	U		49		DD7		[CG1,XGM,RFS]

COMPASS/PATRIOT (MK)

SERIES	LINE	BODY	ENGINE	TRANSMISSION
H = HIGHLINE L = LOWLINE P = PREMIUM	J = JEEP - 4WD T = JEEP - 2WD	49 = HATCHBACK TYPE #2 74 = SPORT UTILITY 4-DR TYPE #4	ED3 = 2.4L 4 Cyl DOHC 16V Dual VVT Engine	DD7 = 5-Speed Manual T355 Transmission DEF = 6-Speed Manual Aisin BG6 Trans DAV = Continuously Variable Transmission DAW = Cont.Var. w/Off-Rd Crawl Ratio Trans

AR = use ase required - = Non illustrrated part

Wiring,Unibody
Figure 8-1505

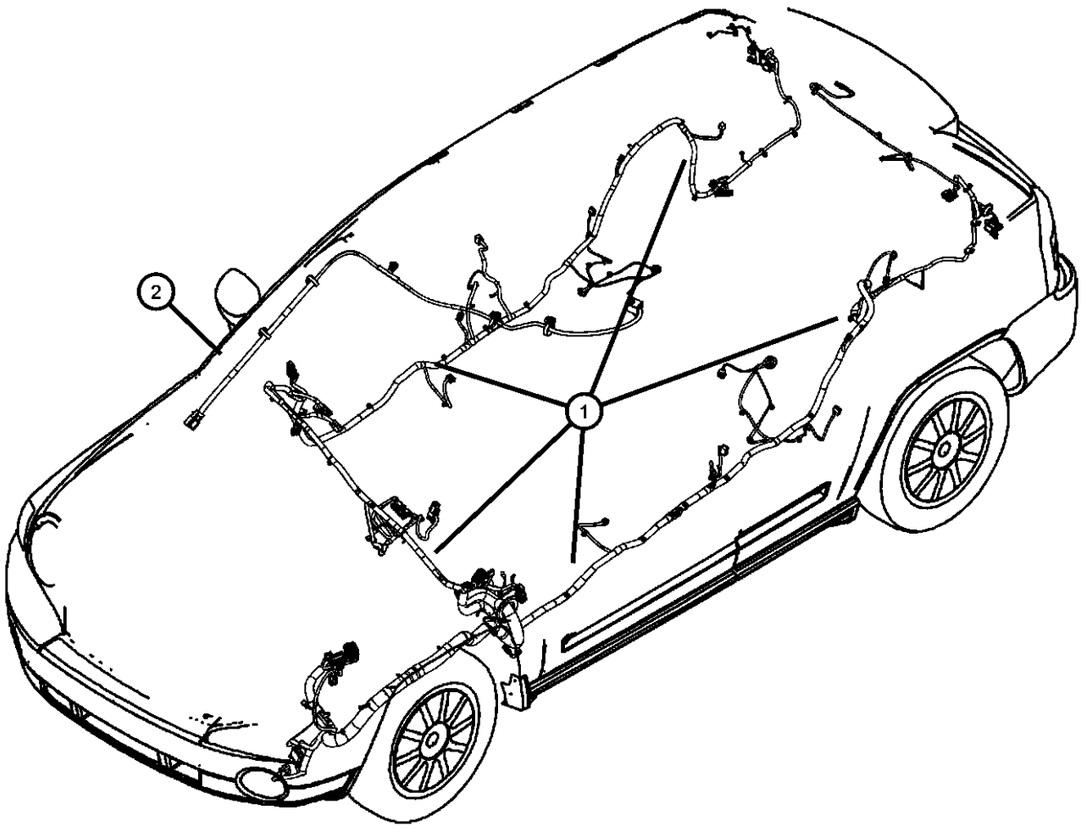

ITEM	PART NUMBER	QTY	LINE	SERIES	BODY	ENGINE	TRANS	TRIM	DESCRIPTION
		1	U		49, 74		DD7		[CG1,XGM,RFS]
	04795975AC	1	U		49		DEF		[CG1,XGM]
	04795976AC	1	U		49		DEF		[CG1,XGM,RFS]
		1	U		49, 74		DEF		[CG1,XGM,RFS]
	05084124AC	1	T		74		DAV		[CJ4,XGM]
	05084126AC	1	T		74		DAV		[CJ4,XGM,RFS]
	05084128AC	1	T		74		DD7		[CJ4,JE8]
	05084129AC	1	T		74		DD7		[CJ4,XGM]
	05084131AC	1	T		74		DD7		[CJ4,RFS,XGM]
	05084133AC	1	J		74		DAV, DAW		[CJ4]
	05084134AC	1	J		74		DD7		[CJ4,XGM]
	05084136AC	1	J		74		DD7		[CJ4,XGM,RFS]
	05084138AC	1	J		74		DAV, DAW		[CJ4,XGM]
		1	U		49, 74		DEF		[CG1,XGM]
	05084192AB	1	J		49		DAV, DAW		[CG1,ABB]
		1	J		49, 74		DAV, DAW		[CG1,ABB]
	05084193AB	1	J		49		DAV, DAW		[CG1,ABB,RFS]
		1	J		49, 74		DAV, DAW		[CG1,ABB,RFS]
	05084194AB	1	J		49		DD7		[CG1,ABB]
		1	J		49, 74		DD7		[CG1,ABB]
	05084195AB	1	J		49		DD7		[CG1,ABB,RFS]
		1	J		49, 74		DD7		[CG1,ABB,RFS]
	05084140AC	1	J		74		DAV, DAW		[CJ4,XGM,RFS]
	05084191AB	1	J		49		DD7		[CG1,XGM,RFS]
	05084197AB	1	J		49, 74		DEF		[CG1,ABB,RFS]
	05084198AB	1	U		49		DAV, DAW		[CG1]
		1	U		49, 74		DAV, DAW		[CG1]
	05084199AB	1	U		49		DAV, DAW		[CG1,RFS]
		1	U		49, 74		DAV, DAW		[CG1,RFS]
	05084200AB	1	U		49		DD7		[CG1]
		1	U		49, 74		DD7		[CG1]
	05084201AB	1	U		49		DD7		[CG1,RFS]

COMPASS/PATRIOT (MK)

SERIES	LINE	BODY	ENGINE	TRANSMISSION
H = HIGHLINE L = LOWLINE P = PREMIUM	J = JEEP - 4WD T = JEEP - 2WD	49 = HATCHBACK TYPE #2 74 = SPORT UTILITY 4-DR TYPE #4	ED3 = 2.4L 4 Cyl DOHC 16V Dual VVT Engine	DD7 = 5-Speed Manual T355 Transmission DEF = 6-Speed Manual Aisin BG6 Trans DAV = Continuously Variable Transmission DAW = Cont.Var. w/Off-Rd Crawl Ratio Trans

AR = use ase required - = Non illustrrated part

Wiring,Unibody
Figure 8-1505

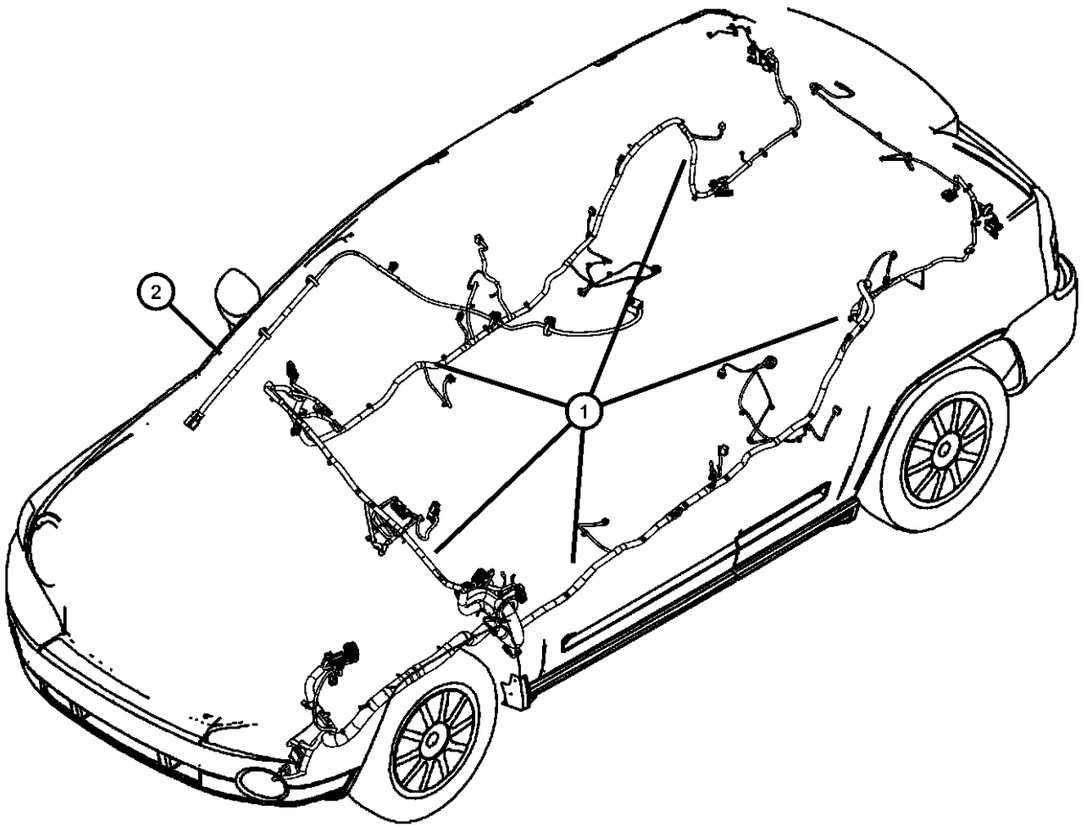

ITEM	PART NUMBER	QTY	LINE	SERIES	BODY	ENGINE	TRANS	TRIM	DESCRIPTION
		1	U		49, 74		DD7		[CG1,RFS]
	05084202AB	1	U		49		DEF		[CG1]
	05084196AB	1	J		49		DEF		[CG1,ABB]
		1	J		49, 74		DEF		[CG1,ABB]
		1	J		49		DEF		[CG1,ABB,RFS]
	05084209AB	1	T		49		DAV		[CG1,CJ4]
	05084211AB	1	T		49		DAV		[CG1]
	05084213AB	1	T		49		DAV		[CG1,XGM]
	05084216AB	1	T		49		DAV		[CG1,CJ4,RFS]
		1	U		49, 74		DEF		[CG1]
	05084203AB	1	U		49		DEF		[CG1,RFS]
		1	U		49, 74		DEF		[CG1,RFS]
	05084254AB	1	T		49		DD7		[CG1,CJ4]
	05084256AB	1	T		49		DD7		[CG1]
	05084257AB	1	T		49		DD7		[CG1,XGM]
	05084252AB	1	T		49		DAV		[CG1,XGM,RFS]
	05084253AB	1	T		49		DAV		[CG1,XGM,CJ4,RFS]
	05084261AB	1	T		49		DD7		[CG1,XGM,RFS,CJ4]
	05084262AB	1	J		49		DAV, DAW		[CG1,CMA,RSA,DHD,GWG]
		1	J		49		DAV		[CG1,CMA,RSA,DHD,GWG]
	05084259AB	1	T		49		DD7		[CG1,CJ4,RFS]
	05084260AB	1	T		49		DD7		[CG1,XGM,RFS]
	05084266AB	1	J		49		DAV, DAW		[CG1,XGM,CJ4]
		1	J		49		DAV		[CG1,XGM,CJ4]
	05084268AB	1	J		49		DAV, DAW		[CG1,XGM,RFS]
		1	J		49		DAV		[CG1,XGM,RFS]
	05084263AB	1	J		49		DAV, DAW		[CG1,CJ4,CMA,RSA,DHD,GWG]
		1	J		49		DAV		[CG1,CJ4,CMA,RSA,DHD,GWG]
	05084265AB	1	J		49		DAV, DAW		[CJ1,CJ4,RFS]
		1	J		49		DAV		[CJ1,CJ4,RFS]
	05084269AB	1	J		49		DAV, DAW		[CG1,XGM,CJ4,RFS]
		1	J		49		DAV		[CG1,XGM,CJ4,RFS]

COMPASS/PATRIOT (MK)

SERIES	LINE	BODY	ENGINE	TRANSMISSION
H = HIGHLINE L = LOWLINE P = PREMIUM	J = JEEP - 4WD T = JEEP - 2WD	49 = HATCHBACK TYPE #2 74 = SPORT UTILITY 4-DR TYPE #4	ED3 = 2.4L 4 Cyl DOHC 16V Dual VVT Engine	DD7 = 5-Speed Manual T355 Transmission DEF = 6-Speed Manual Aisin BG6 Trans DAV = Continuously Variable Transmission DAW = Cont.Var. w/Off-Rd Crawl Ratio Trans

AR = use ase required - = Non illustrrated part

Wiring,Unibody
Figure 8-1505

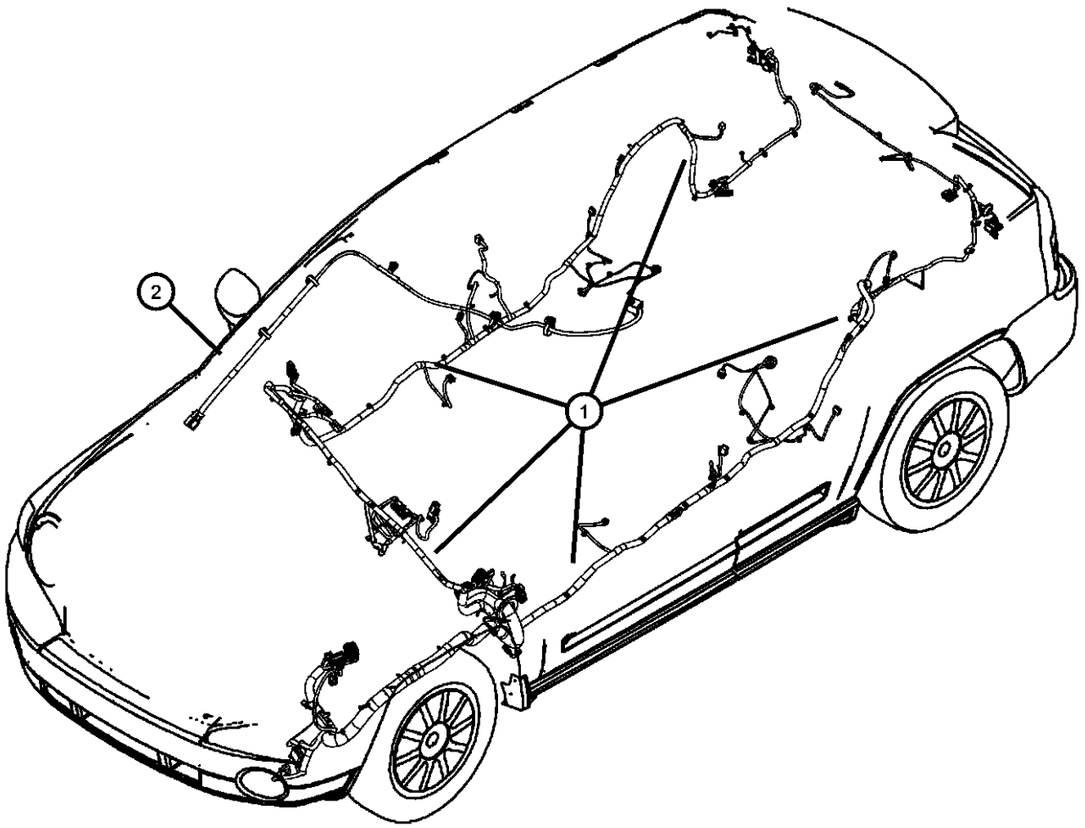

ITEM	PART NUMBER	QTY	LINE	SERIES	BODY	ENGINE	TRANS	TRIM	DESCRIPTION
	05084683AB	1	T		74		DAV		[CJ4]
	05084685AB	1	T		74		DAV		[CJ4,RFS]
	05084694AB	1	T		74		DD7		[CJ4,JPH,JKV,CMA,RSA,NHM,GWG
	05084697AB	1	T		74		DD7		[CJ4,RFS]
	05084700AB	1	J		74		DD7		[CJ4]
	05084701AB	1	J		74		DD7		[CJ4,RFS]
	05084703AB	1	J		74		DAV, DAW		[CJ4,RFS,DHD,GWG,CMA]
	05084705AB	1	J		74		DAV, DAW		[CJ4,RFS]
2									WIRING, Jumper
	04795926AD	1	J, T, U		74				A pillar
	04795925AC	1	J, T, U		49				A pillar
-3	68018150AA	1	J, T, U		49, 74				WIRING, Jumper, Trailer wiring
-4	05084123AA	1	J, T, U		49, 74				WIRING, Trailer Tow

COMPASS/PATRIOT (MK)

SERIES	LINE	BODY	ENGINE	TRANSMISSION
H = HIGHLINE L = LOWLINE P = PREMIUM	J = JEEP - 4WD T = JEEP - 2WD	49 = HATCHBACK TYPE #2 74 = SPORT UTILITY 4-DR TYPE #4	ED3 = 2.4L 4 Cyl DOHC 16V Dual VVT Engine	DD7 = 5-Speed Manual T355 Transmission DEF = 6-Speed Manual Aisin BG6 Trans DAV = Continuously Variable Transmission DAW = Cont.Var. w/Off-Rd Crawl Ratio Trans

AR = use ase required - = Non illustrrated part

Wiring Doors and Liftgate
Figure 8-1510

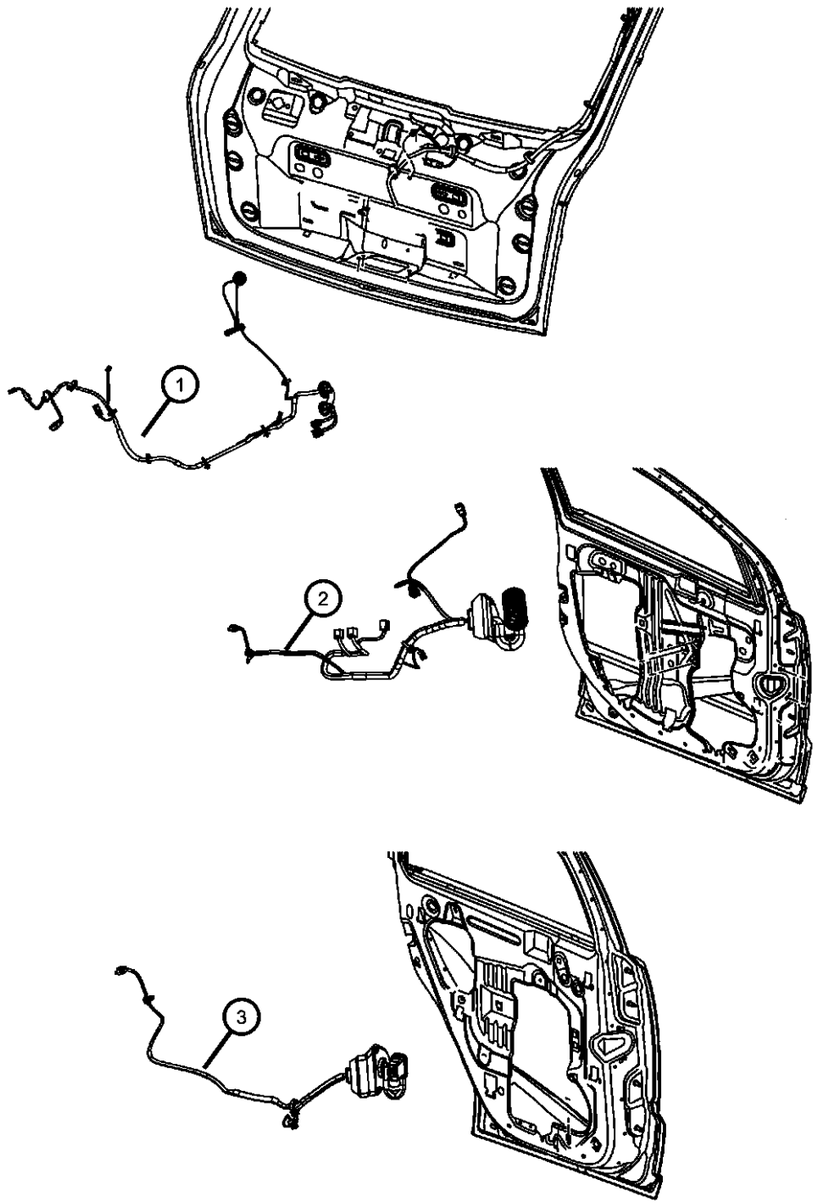

ITEM	PART NUMBER	QTY	LINE	SERIES	BODY	ENGINE	TRANS	TRIM	DESCRIPTION
1									WIRING, Liftgate
	04795919AD	1	J, T, U		49				
	04795920AD	1	J, T, U		49				[JPH]
	04795921AD	1	J, T, U		49				[RFS]
	04795922AD	1	J, T, U		49				[RFS,JPH]
	05084165AB	1	J, T, U		74				
	05084166AB	1	J, T, U		74				[JPH]
	05084167AB	1	J, T, U		74				[RFS]
	05084168AB	1	J, T, U		74				[RFS,JPH]
2									WIRING, Front Door
	04795319AD	1	J, T		49				[GTN,JPD,JPH,RC9], Left
	04795320AD	1	J, T		49				[GTN,JPD,JPH,RC9], Right
	04795496AD	1	J, T		49				[GTP,JF8,JE8,RC9], Right
	04795497AD	1	J, T		49				[GTS,JPD,JPH,RC9], Left
	04795498AD	1	J, T		49				[GTS,JPD,JPH,RC9], Right
	04795577AD	1	J		49				[GTP,JF8,JE8,RC9], Left
	04795578AF	1	U		49				[GUL,JPD,JPH,RCD], Right
	04795579AF	1	U		49				[GUL,JPD,JPH,RCD], Left
	04795929AA	1	J		49				[GTP,JF8,JE8,RCD], Left
	04795932AA	1	U		74				[GUL,JPD,JPH,RCD], Right
	04795928AA	1	J		49				[GTP,JF8,JE8,RCD], Right
		1	J		49				[GTP,JF8,JE8,RC9], Right
	04795933AA	1	U		74				[GUL,JPD,JPH,RC9], Left
		1	U		74				[GUL,JPD,JPH,RC9], Right
		1	U		74				[GUL,JPD,JPH,RCD], Left
3									WIRING, Rear Door
	04795574AD	1	J, T		49				[JF8,JE8,RC9], Right
	04795321AD	1	J, T		49				[JF8,JE8,RC9], Left
		1	J, T		49				[JF8,JE8,RCD], Left
	04795575AD	1	J, T		49				[JPD,JPH,RC9], Left
		1	J, T		49				[JPD,JPH,RCD], Left
		1	J, T		49				[JF8,JE8,RCD], Right
	04795889AD	1	U		49				Left

COMPASS/PATRIOT (MK)

SERIES	LINE	BODY	ENGINE	TRANSMISSION
H = HIGHLINE L = LOWLINE P = PREMIUM	J = JEEP - 4WD T = JEEP - 2WD	49 = HATCHBACK TYPE #2 74 = SPORT UTILITY 4-DR TYPE #4	ED3 = 2.4L 4 Cyl DOHC 16V Dual VVT Engine	DD7 = 5-Speed Manual T355 Transmission DEF = 6-Speed Manual Aisin BG6 Trans DAV = Continuously Variable Transmission DAW = Cont.Var. w/Off-Rd Crawl Ratio Trans

Wiring Doors and Liftgate
Figure 8-1510

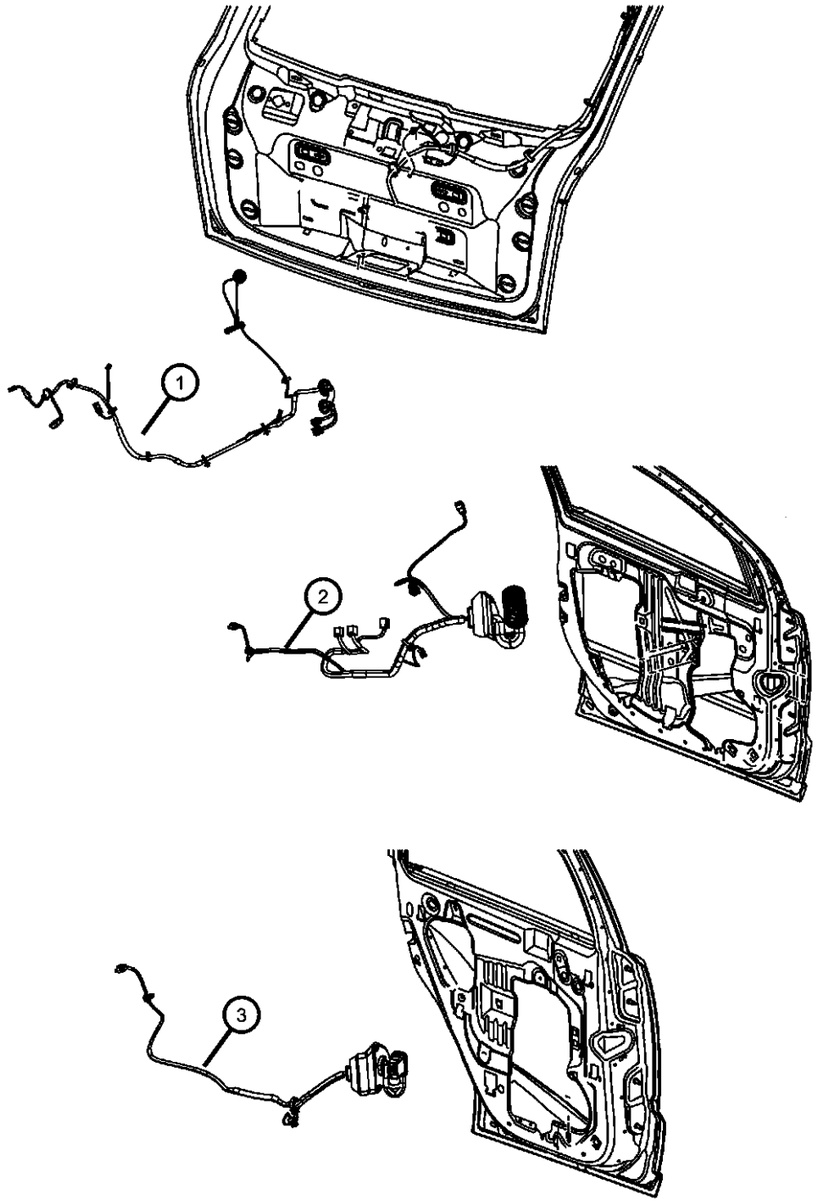

ITEM	PART NUMBER	QTY	LINE	SERIES	BODY	ENGINE	TRANS	TRIM	DESCRIPTION
	04795888AD	1	U		49				Right
	05267790AD	1	J, T		49				[JPD,JPH,RCD], Right
		1	J, T		49				[JPD,JPH,RC9], Right

COMPASS/PATRIOT (MK)

SERIES	LINE	BODY	ENGINE	TRANSMISSION
H = HIGHLINE L = LOWLINE P = PREMIUM	J = JEEP - 4WD T = JEEP - 2WD	49 = HATCHBACK TYPE #2 74 = SPORT UTILITY 4-DR TYPE #4	ED3 = 2.4L 4 Cyl DOHC 16V Dual VVT Engine	DD7 = 5-Speed Manual T355 Transmission DEF = 6-Speed Manual Aisin BG6 Trans DAV = Continuously Variable Transmission DAW = Cont.Var. w/Off-Rd Crawl Ratio Trans

AR = use ase required - = Non illustrrated part

ITEM	PART NUMBER	QTY	LINE	SERIES	BODY	ENGINE	TRANS	TRIM	DESCRIPTION
-1	68001422AA	1	J, T, U		49, 74	ECD			CONNECTOR
-2	04670088	1							PLUG, Dash Panel, 35mm Diameter
-3									WIRING KIT, 2 Way, Female
	68001950AA	1			49				Passenger air bag
	68001949AA	1			49				Passenger curtain air bag
-4	04641780	1	J, T, U		49, 74				STRAP, Tie
-5	05073039AA	1	J, T, U		49, 74				STRAP, Tie

For Electrical Connector Repair Information visit the World Wide Web at

http://dto.vftis.com/mopar/disclaimer.asp

COMPASS/PATRIOT (MK)

SERIES	LINE	BODY	ENGINE	TRANSMISSION
H = HIGHLINE L = LOWLINE P = PREMIUM	J = JEEP - 4WD T = JEEP - 2WD	49 = HATCHBACK TYPE #2 74 = SPORT UTILITY 4-DR TYPE #4	ED3 = 2.4L 4 Cyl DOHC 16V Dual VVT Engine	DD7 = 5-Speed Manual T355 Transmission DEF = 6-Speed Manual Aisin BG6 Trans DAV = Continuously Variable Transmission DAW = Cont.Var. w/Off-Rd Crawl Ratio Trans

Air Bag Modules and Sensors
Figure 8-1710

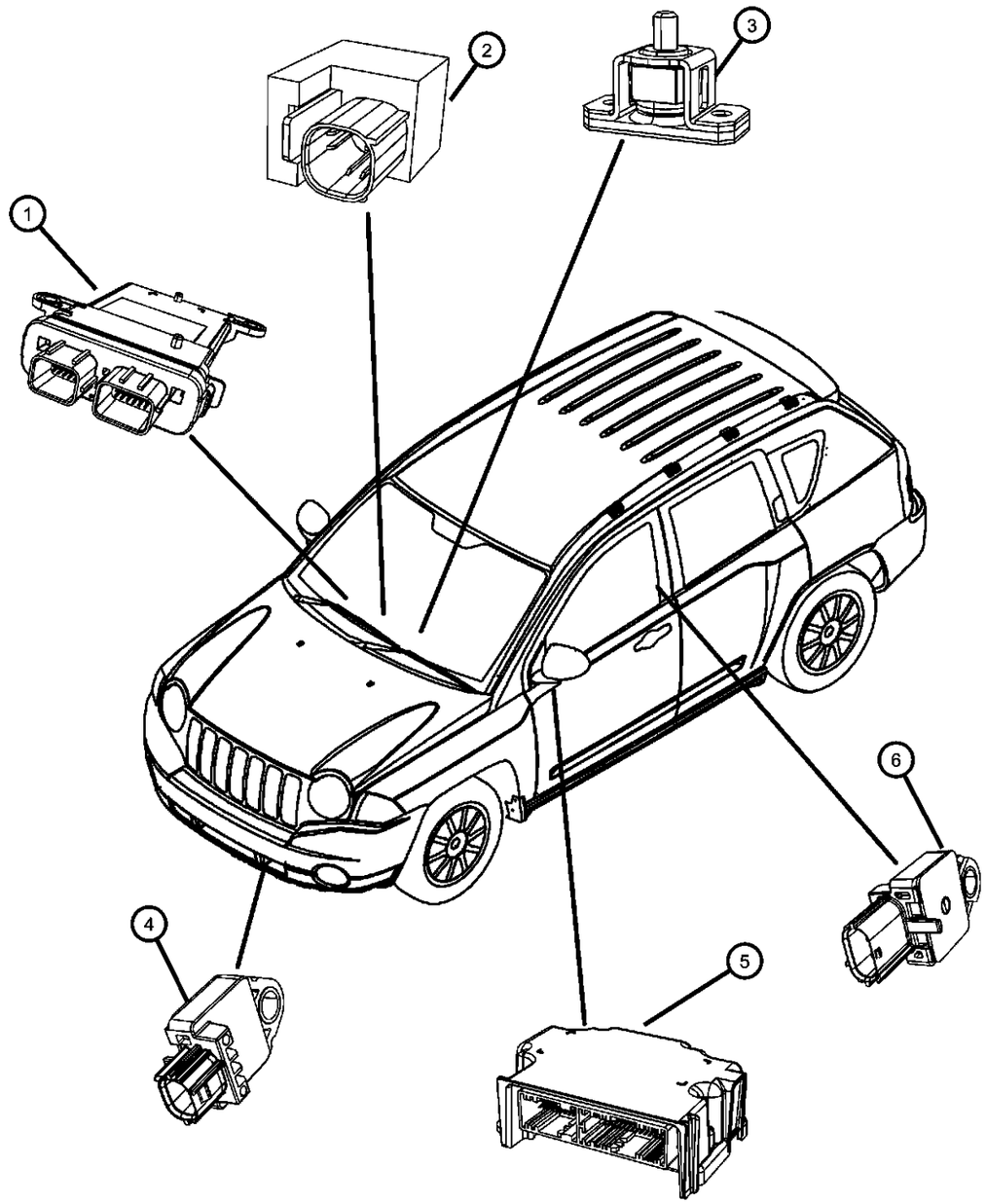

ITEM	PART NUMBER	QTY	LINE	SERIES	BODY	ENGINE	TRANS	TRIM	DESCRIPTION
1									MODULE, Occupant Classification
	04896027AD	1	J, T		49				[CFN]
	05084006AE	1							
		1	J, T		49				[CDH]
2	05084008AA	2	J, T		49, 74				SENSOR, Seat Position
3	05084007AA	4							SENSOR, Strain Gauge
4									SENSOR, Air Bag
	04896061AA	2	J, T, U		49, 74				[CG1], Front
		2	J, T, U		49, 74				[CJ1,CJ4],
5									MODULE, Occupant Restraint
	04672607AC	1							[CJ4,CJ1]
	04672609AC	1							[CG1,CJ4,CJ1], Export
	04672610AB	1							[CG1], Export
	04672611AA	1	J, T, U		74				
	04672612AA	1	J, T, U		74				[CG1,CJ4,CJ1]
	04672613AA	1	J, T, U		74				[CG1,CJ4,CJ1], Export
	04672614AA	1	J, T, U		74				[CG1] Mexico
	04896618AA	1	J, T, U		49				[CG1,CJ4,CJ1]
		1	J		49				[CG1,CJ4,CJ1]
	04896619AA	1	J, T, U		49				[CG1,CJ4,CJ1], Export
		1	J		49				[CG1,CJ4,CJ1], Export
	04896615AA	1	J, T, U		74				[CG1,CJ4], Export
6	04896065AA	2	J, T, U		49, 74				SENSOR, Side Airbag Impact, [CJ1,CJ4]
-7	06104629AA	2							SCREW, [M6X1.0X30.00], OCS Module to seat
-8	05097674AA	3							NUT, Hex, Occupant Restraint Module To Center Tunnel, Mounting

COMPASS/PATRIOT (MK)

SERIES	LINE	BODY	ENGINE	TRANSMISSION
H = HIGHLINE L = LOWLINE P = PREMIUM	J = JEEP - 4WD T = JEEP - 2WD	49 = HATCHBACK TYPE #2 74 = SPORT UTILITY 4-DR TYPE #4	ED3 = 2.4L 4 Cyl DOHC 16V Dual VVT Engine	DD7 = 5-Speed Manual T355 Transmission DEF = 6-Speed Manual Aisin BG6 Trans DAV = Continuously Variable Transmission DAW = Cont.Var. w/Off-Rd Crawl Ratio Trans

AR = use ase required - = Non illustrrated part

Airbags and Clocksprings
Figure 8-1720

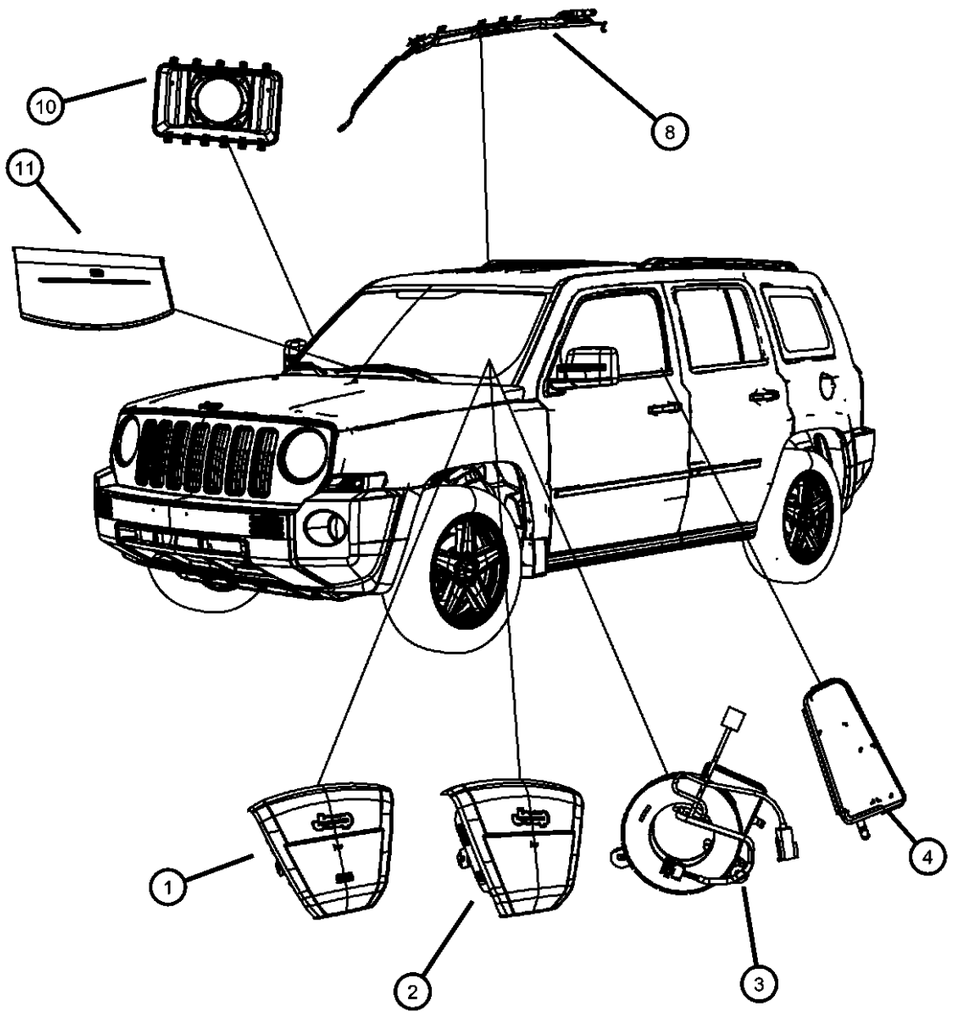

ITEM	PART NUMBER	QTY	LINE	SERIES	BODY	ENGINE	TRANS	TRIM	DESCRIPTION
NOTE:									
Sales Codes:									
[EBA]=1.8L 4 CYL DOHC 16V DUAL VVT ENGINE									
[ECN]=2.0L 4 CYL DOHC 16V DUAL VVT ENGINE									
[ED3]=2.4L 4 CYL DOHC 16V DUAL VVT ENGINE									
[ECD]=2.0L 4 CYL DOHC Diesel 16V Engine									
1									AIR BAG, Driver
	0YD59XDVAB	1	J, T, U		49, 74				[DA][CG1]
	0YD59DK7AB	1	J, T, U		49, 74				[KA][CG1]
2									AIR BAG, Driver, Air Bag Delete
	1BL23DK7AB	1	J, T, U		49, 74				[KA]
	1BL23XDVAB	1	J, T, U		49, 74				[DA]
3	05175901AA	1							CLOCKSPRING
4									AIR BAG, Seat
	04645992AC	1	J, T		74				Right
	04645997AC	1	J, T		74				Left
-5	06505656AA	1							SCREW, Hex Flange Head, M10x1.5x35., Steering Wheel To Steering Column, Mounting
-6	06105037AA	2							BOLT, Hex Flange Head, [M6X1.00X20.00], Driver Air Bag To Steering Wheel, Mounting
-7	06506035AA	12							NUT, U, M6x1, Side Airbag To Body, Mounting
8									AIR BAG, Side Curtain
	55351290AD	1	J		49				[CGS,CJ4], Right
	55351291AD	1	J, T, U		49				[CJ4], Left
		1	J		49				[CGS,CJ4], Left
	55351258AA	1	J, T, U		74				Right
	55351259AA	1	J, T, U		74				Left
		1	J, T, U		49				[CJ4], Right
-9		1							SCREW, Serviced With Side Airbag, (NOT SERVICED),
10	52029341AA	1							AIR BAG, Passenger
11									COVER, Air Bag Module
	0ZU92XDVAA	1	U		49, 74				[DA]
	0YF36DK7AA	1	J, T		49, 74				[KA]

COMPASS/PATRIOT (MK)

SERIES	LINE	BODY	ENGINE	TRANSMISSION
H = HIGHLINE L = LOWLINE P = PREMIUM	J = JEEP - 4WD T = JEEP - 2WD	49 = HATCHBACK TYPE #2 74 = SPORT UTILITY 4-DR TYPE #4	ED3 = 2.4L 4 Cyl DOHC 16V Dual VVT Engine	DD7 = 5-Speed Manual T355 Transmission DEF = 6-Speed Manual Aisin BG6 Trans DAV = Continuously Variable Transmission DAW = Cont.Var. w/Off-Rd Crawl Ratio Trans

Airbags and Clocksprings
Figure 8-1720

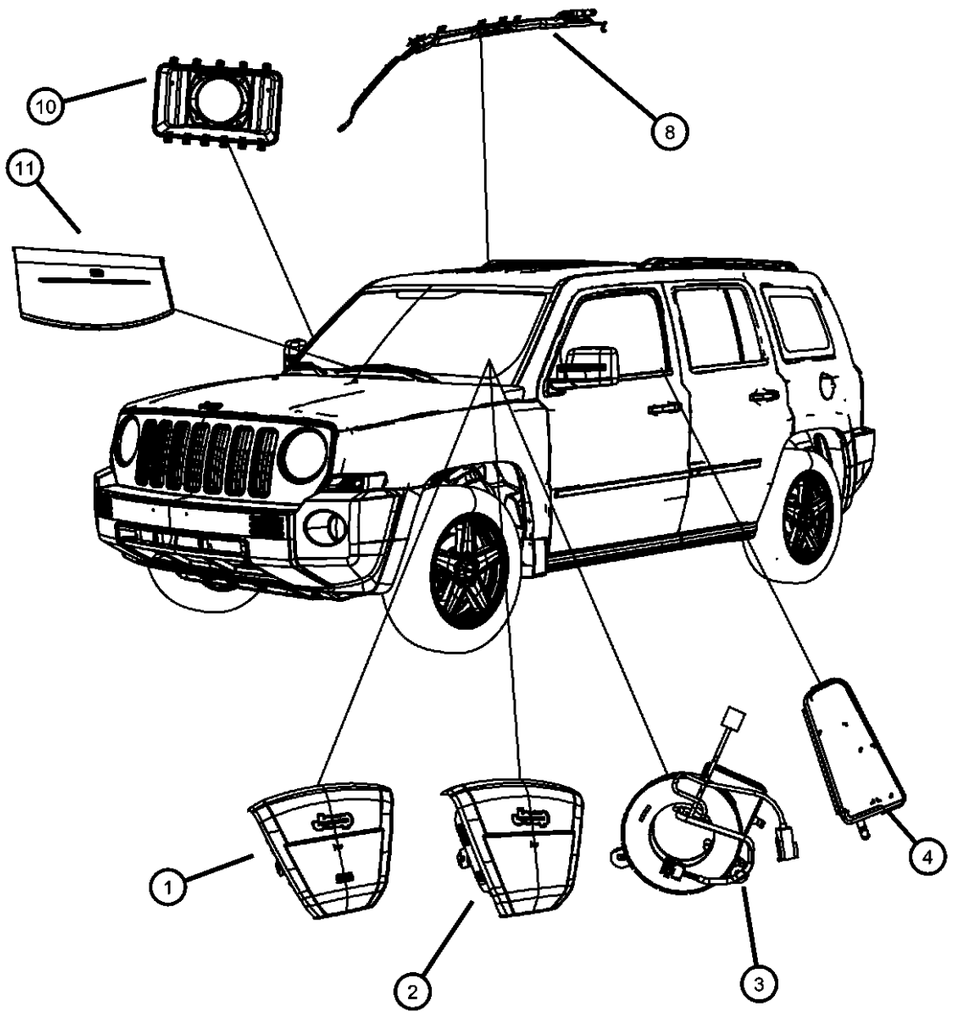

ITEM	PART NUMBER	QTY	LINE	SERIES	BODY	ENGINE	TRANS	TRIM	DESCRIPTION
	0YF36XDVAA	1	J, T						[DA]
	0ZU92DK7AA	1	U		49, 74				[KA]

COMPASS/PATRIOT (MK)

SERIES	LINE	BODY	ENGINE	TRANSMISSION
H = HIGHLINE L = LOWLINE P = PREMIUM	J = JEEP - 4WD T = JEEP - 2WD	49 = HATCHBACK TYPE #2 74 = SPORT UTILITY 4-DR TYPE #4	ED3 = 2.4L 4 Cyl DOHC 16V Dual VVT Engine	DD7 = 5-Speed Manual T355 Transmission DEF = 6-Speed Manual Aisin BG6 Trans DAV = Continuously Variable Transmission DAW = Cont.Var. w/Off-Rd Crawl Ratio Trans

AR = use ase required - = Non illustrrated part

Spark Plugs, Cables, Coils
Figure 8-1910

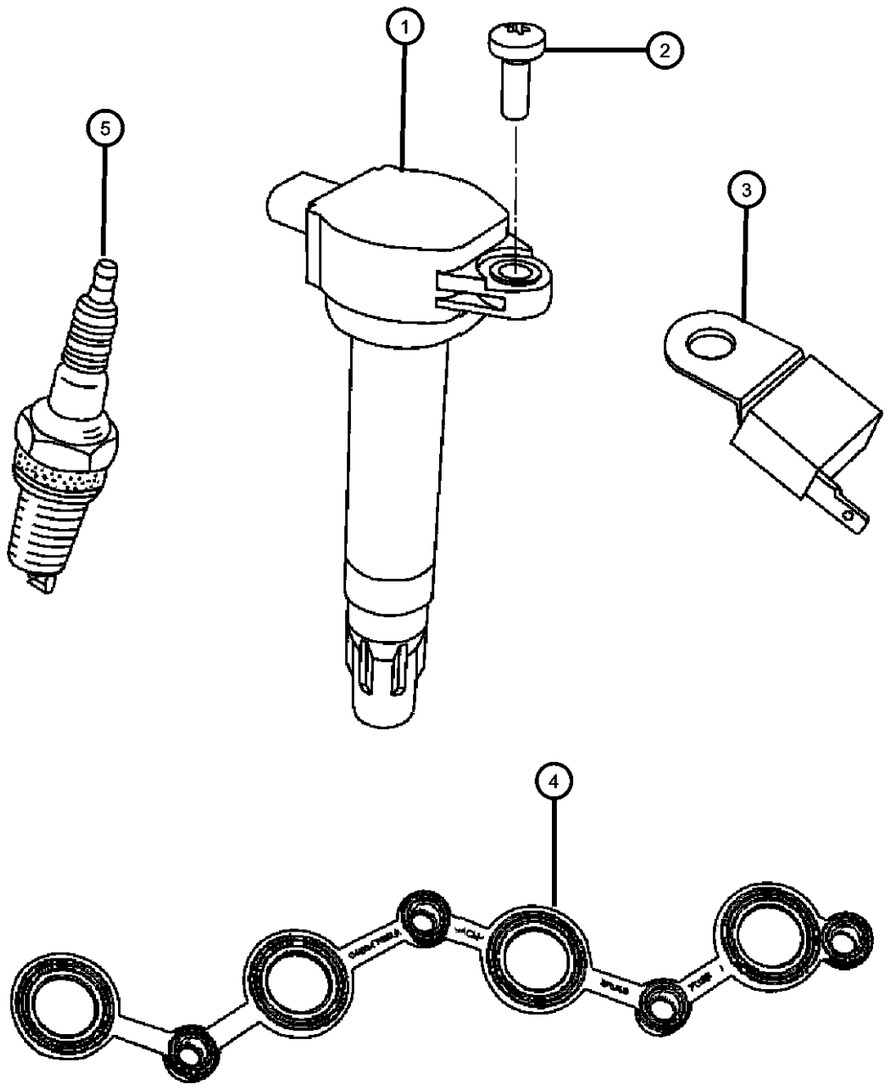

ITEM	PART NUMBER	QTY	LINE	SERIES	BODY	ENGINE	TRANS	TRIM	DESCRIPTION
1	04606824AB	4	J, T, U		49, 74	ED3			COIL, Ignition
2									SCREW, [M6X1.0X16.0]
	06104142AA	4	J		49	ED3			
		4	J, T, U		49, 74	ED3			Ignition coil mounting
3	04606866AA	1	J, T, U		49, 74	ED3			CAPACITOR, Ignition
4	04884765AA	1	J, T, U		49, 74	ED3			GASKET
5	SP0ZFR5F11	4	J, T, U		49, 74	ED3			SPARK PLUG

COMPASS/PATRIOT (MK)

SERIES	LINE	BODY	ENGINE	TRANSMISSION
H = HIGHLINE L = LOWLINE P = PREMIUM	J = JEEP - 4WD T = JEEP - 2WD	49 = HATCHBACK TYPE #2 74 = SPORT UTILITY 4-DR TYPE #4	ED3 = 2.4L 4 Cyl DOHC 16V Dual VVT Engine	DD7 = 5-Speed Manual T355 Transmission DEF = 6-Speed Manual Aisin BG6 Trans DAV = Continuously Variable Transmission DAW = Cont.Var. w/Off-Rd Crawl Ratio Trans

AR = use ase required - = Non illustrrated part

Glow Plugs
Figure 8-1915

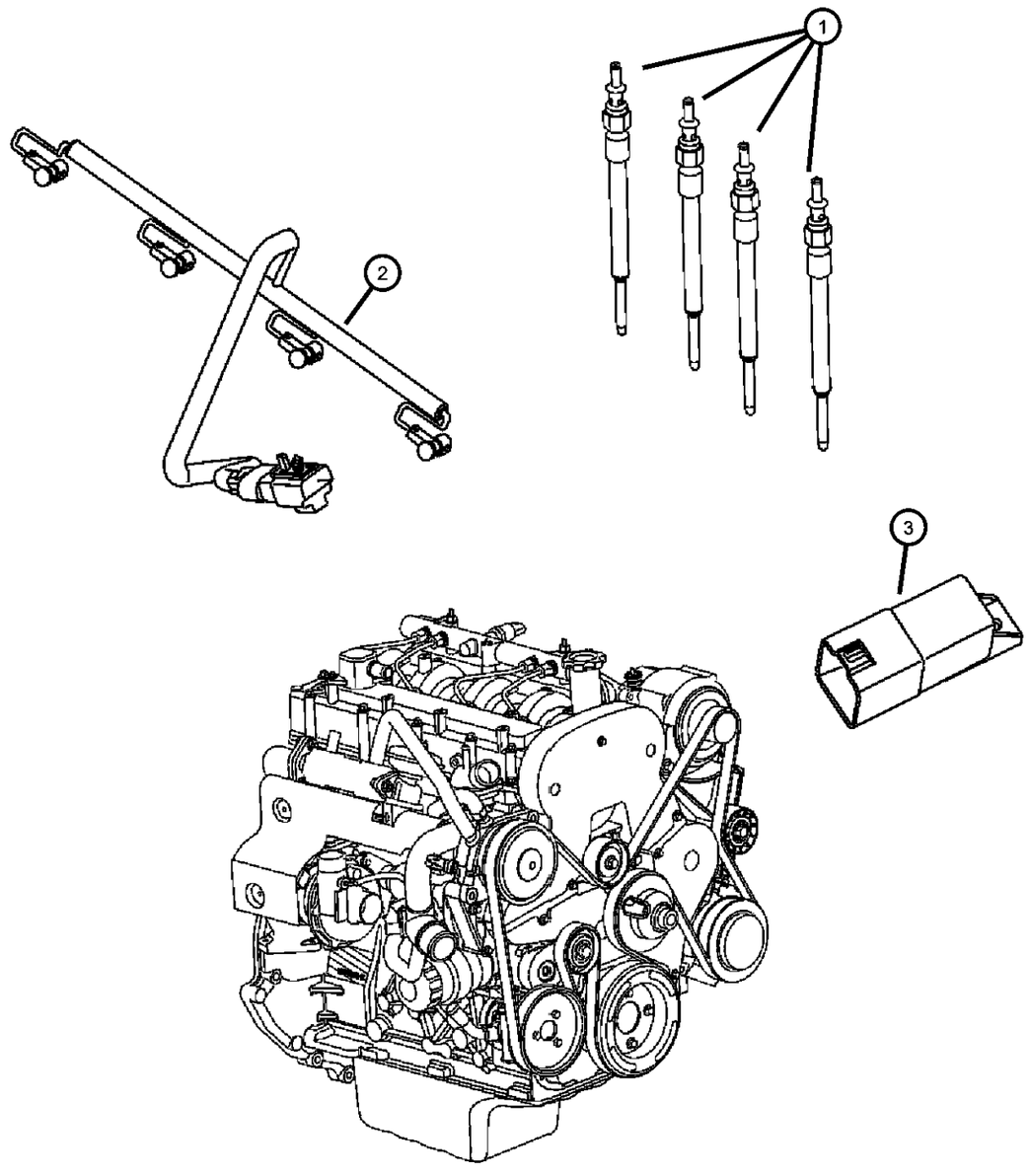

ITEM	PART NUMBER	QTY	LINE	SERIES	BODY	ENGINE	TRANS	TRIM	DESCRIPTION
1	68000913AA	4				ECD			PLUG, Glow
2	68001592AA	1	J, T, U		49, 74	ECD			WIRING, Glow Plug
3	05033351AA	1	J, T, U		49, 74	ECD			MODULE, Glow Plug

COMPASS/PATRIOT (MK)

SERIES	LINE	BODY	ENGINE	TRANSMISSION
H = HIGHLINE L = LOWLINE P = PREMIUM	J = JEEP - 4WD T = JEEP - 2WD	49 = HATCHBACK TYPE #2 74 = SPORT UTILITY 4-DR TYPE #4	ED3 = 2.4L 4 Cyl DOHC 16V Dual VVT Engine	DD7 = 5-Speed Manual T355 Transmission DEF = 6-Speed Manual Aisin BG6 Trans DAV = Continuously Variable Transmission DAW = Cont.Var. w/Off-Rd Crawl Ratio Trans

AR = use ase required - = Non illustrrated part

Group - 08A

Instrument Panel and Radios and Consoles

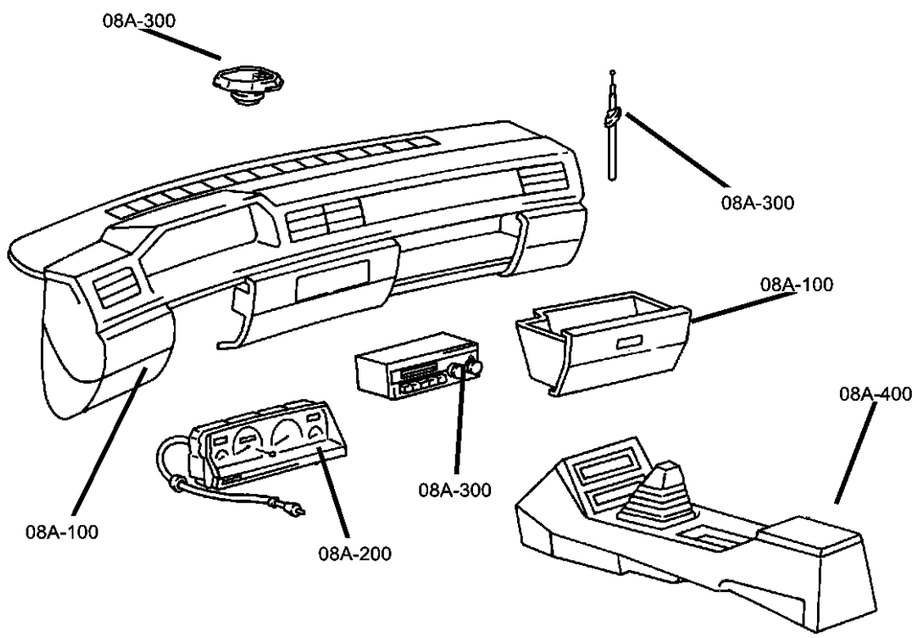

08A-100 Instrument Panel	08A-200 Instrument Panel Cluster	08A-300 Radio, Antenna, and Speakers	08A-400 Consoles
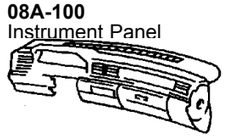	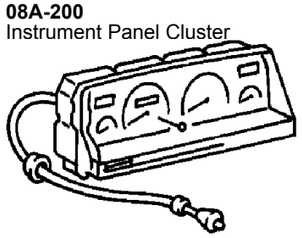	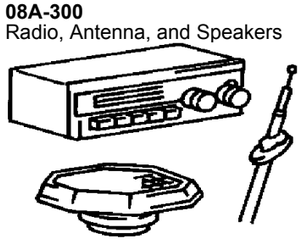	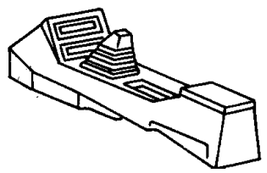

Group - 08A Instrument Panel and Radios and Consoles

Illustration Title — Group-Fig. No.

Instrument Panel
Instrument Panel ..... Fig. 08A - 110

Instrument Panel Cluster
Instrument Panel Cluster ..... Fig. 08A - 210

Radio, Antenna, and Speakers
Radios ..... Fig. 08A - 310
Antenna ..... Fig. 08A - 315
Antenna GPS ..... Fig. 08A - 320
Speakers ..... Fig. 08A - 325
Subwoofer and Amplifier ..... Fig. 08A - 330
Liftgate Speaker System ..... Fig. 08A - 335
Satellite Radio System ..... Fig. 08A - 340

Consoles
Floor Console ..... Fig. 08A - 405

Instrument Panel
Figure 08A-110

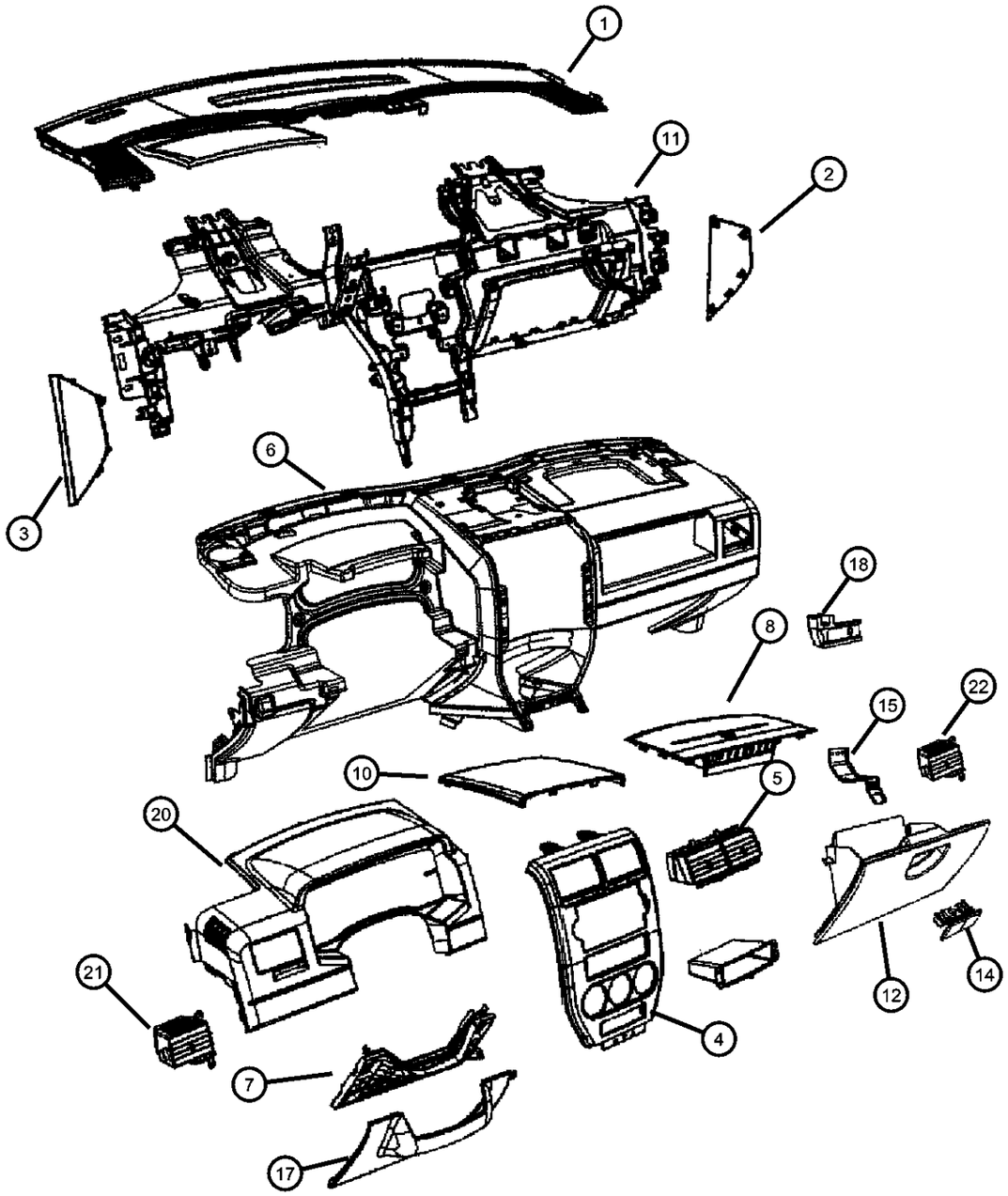

ITEM	PART NUMBER	QTY	LINE	SERIES	BODY	ENGINE	TRANS	TRIM	DESCRIPTION
1									COVER, Instrument Panel
	0YF33DK7AA	1	J, T, U		49				[KA]
	0YF33XDVAA	1	J, T, U		49				[DA]
	1AV82DK7AA	1	J, T, U		74				[KA]
	1AV82XDVAA	1	J, T, U		74				[DA]
2									CAP, Instrument Panel End
	0YF48DK7AA	1	J, T		49, 74				[KA], Right
	0YF48XDVAA	1	U						[DA], Right
		1	J, T		49, 74				[DA], Right
		1	U		49, 74				[KA], Right
	1AV80DK7AA	1	J, T						[KA], Right, Export
	1AV80XDVAA	1	J, T						[DA], Right, Export
3									CAP, Instrument Panel End
	0YF49DK7AA	1	J, T		49, 74				[KA], Left
	0YF49XDVAA	1	J, T		49, 74				[DA], Left
	1AV81XDVAA	1	U		49, 74				[DA], Left
	1AV81DK7AA	1	U		49, 74				[KA], Left
4									BEZEL, Instrument Panel, Center
	0YF381SFAA	1							[RAR,REF,RAQ,RAK,REG]
	0YZ161SFAA	1							[REJ]
	0YZ161SFAB	1	J, T, U		49, 74				[REC]
5	1AV63DX9AA	1	J, T, U		49, 74				OUTLET, Air Conditioning & Heater
6									PANEL, Instrument
	1FB981DVAA	1	J		49				[DA]
	1FF531DVAA	1	U		49, 74				[DA]
	1FB981K7AA	1	J		49				[KA]
	1FF531K7AA	1	U		49, 74				[KA]
7									COVER, Steering Column
	1AV76DK7AA	1							[KA]
	1AV76XDVAA	1							[DA]
8									COVER, Air Bag Module
	0YF36XDVAA	1	J, T		49, 74				[DA]
	0YF36DK7AA	1	J, T		49, 74				[KA]

COMPASS/PATRIOT (MK)

SERIES	LINE	BODY	ENGINE	TRANSMISSION
H = HIGHLINE L = LOWLINE P = PREMIUM	J = JEEP - 4WD T = JEEP - 2WD	49 = HATCHBACK TYPE #2 74 = SPORT UTILITY 4-DR TYPE #4	ED3 = 2.4L 4 Cyl DOHC 16V Dual VVT Engine	DD7 = 5-Speed Manual T355 Transmission DEF = 6-Speed Manual Aisin BG6 Trans DAV = Continuously Variable Transmission DAW = Cont.Var. w/Off-Rd Crawl Ratio Trans

AR = use ase required - = Non illustrrated part

Instrument Panel
Figure 08A-110

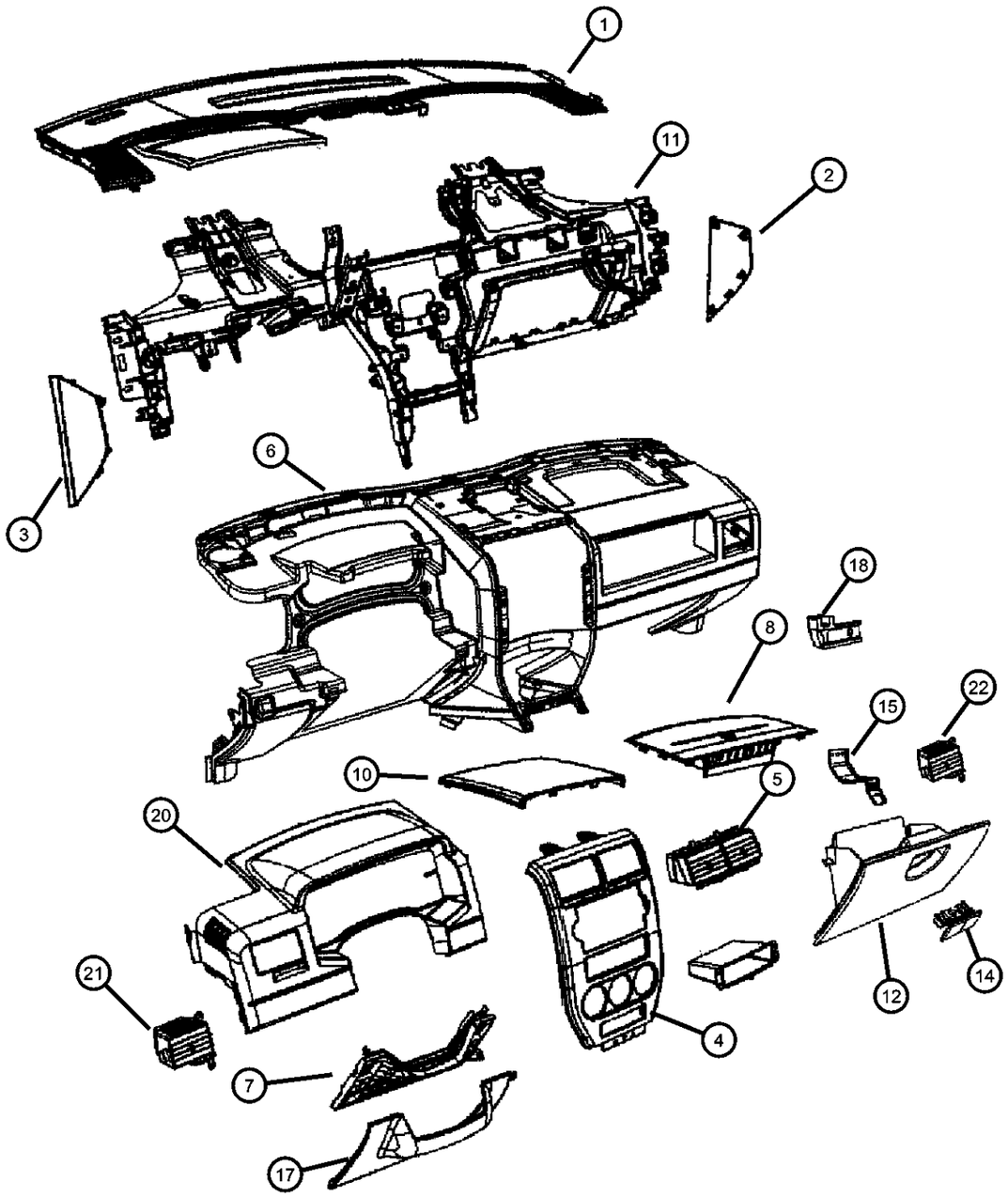

ITEM	PART NUMBER	QTY	LINE	SERIES	BODY	ENGINE	TRANS	TRIM	DESCRIPTION
	0ZU92DK7AA	1	U		49, 74				[KA]
	0ZU92XDVAA	1	U		49, 74				[DA]
-9									COVER, Instrument Panel Opening
	1EN73DK7AA	1	J, T, U		49, 74				[KA] Air bag delete Mexico
	1EN73XDVAA	1	J, T, U		49, 74				[DA] Air bag delete Mexico
10									COVER, Instrument Panel
	0ZM93DK7AA	1							[KA]
	0ZM93XDVAA	1							[DA]
11									REINFORCEMENT, Instrument Panel
	05291721AA	1	J, T		49, 74				
	05291722AA	1	J, T		49				Export and Mexico
		1	J, T		74				Export and Mexico
	05291723AA	1	U		49, 74				
12									GLOVE BOX, Instrument Panel
	1FB991DVAA	1	J		49				[DA]
		1	U		49, 74				[DA]
	1FB991K7AA	1	J		49				[KA]
		1	U		49, 74				[KA]
-13									BRACKET, Glove Box
	68002375AA	1	J, T		49				
	68002376AA	1	U		49, 74				
14									LATCH, Glovebox
	1DN891DVAA	1	J		49				[DA]
	1DN891K7AA	1	J		49				[KA]
	1DN89DK7AA	1	U		49, 74				[KA]
		1	U		49, 74				[DA]
15	68002150AA	1	J		49				STRIKER, Glove Box Door Latch
-16	05291844AB	1							BRACKET, Instrument Panel
17									KNEEBLOCKER, Steering Column Opening
	04664364AA	1	J		49				KNEE DIVERTER
	05291724AA	1	J, T						RESEMBLES AN "ICE CUBE TRAY"

COMPASS/PATRIOT (MK)

SERIES	LINE	BODY	ENGINE	TRANSMISSION
H = HIGHLINE L = LOWLINE P = PREMIUM	J = JEEP - 4WD T = JEEP - 2WD	49 = HATCHBACK TYPE #2 74 = SPORT UTILITY 4-DR TYPE #4	ED3 = 2.4L 4 Cyl DOHC 16V Dual VVT Engine	DD7 = 5-Speed Manual T355 Transmission DEF = 6-Speed Manual Aisin BG6 Trans DAV = Continuously Variable Transmission DAW = Cont.Var. w/Off-Rd Crawl Ratio Trans

AR = use ase required - = Non illustrrated part

Instrument Panel
Figure 08A-110

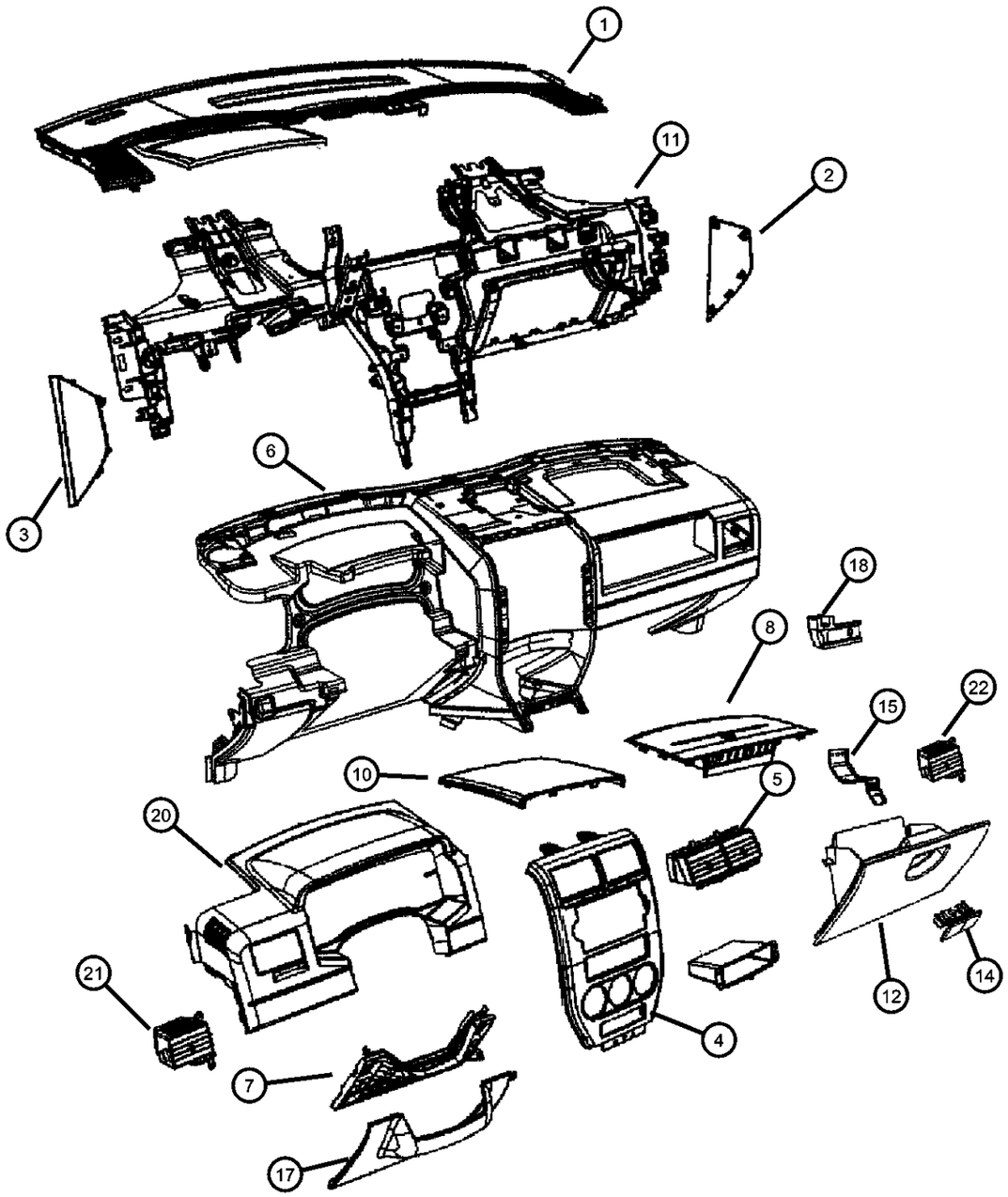

ITEM	PART NUMBER	QTY	LINE	SERIES	BODY	ENGINE	TRANS	TRIM	DESCRIPTION
18									BRACKET, Energy Absorbing
	68002351AA	1	J, T		49, 74				
	68002366AA	1	U		49, 74				
	68002367AA	1	J, T		49				Export
-19	68002374AA	1	U		49, 74				BRACKET, Electrical Connectors
20									BEZEL, Instrument Cluster
	0YF37DK7AA	1	J, T		49, 74				[KA]
	0YF37XDVAA	1	J, T		49, 74				[DA]
	1AV75DK7AA	1	U		49, 74				[KA]
	1AV75XDVAA	1	U		49, 74				[DA]
21									OUTLET, Air Conditioning & Heater
	1CC71DK7AA	1	J, T		49, 74				Left
		1	U		49, 74				Left
22									OUTLET, Air Conditioning & Heater
	1CC701DVAA	1	J, T		49				[DA]
	1CC701K7AA	1	J, T		49				[KA]
-23									PANEL, Instrument Panel Closeout
	04664365AA	1	J, T		49, 74				
	05291661AB	1	U		49, 74				

COMPASS/PATRIOT (MK)

SERIES	LINE	BODY	ENGINE	TRANSMISSION
H = HIGHLINE L = LOWLINE P = PREMIUM	J = JEEP - 4WD T = JEEP - 2WD	49 = HATCHBACK TYPE #2 74 = SPORT UTILITY 4-DR TYPE #4	ED3 = 2.4L 4 Cyl DOHC 16V Dual VVT Engine	DD7 = 5-Speed Manual T355 Transmission DEF = 6-Speed Manual Aisin BG6 Trans DAV = Continuously Variable Transmission DAW = Cont.Var. w/Off-Rd Crawl Ratio Trans

AR = use ase required - = Non illustrrated part

Instrument Panel Cluster
Figure 08A-210

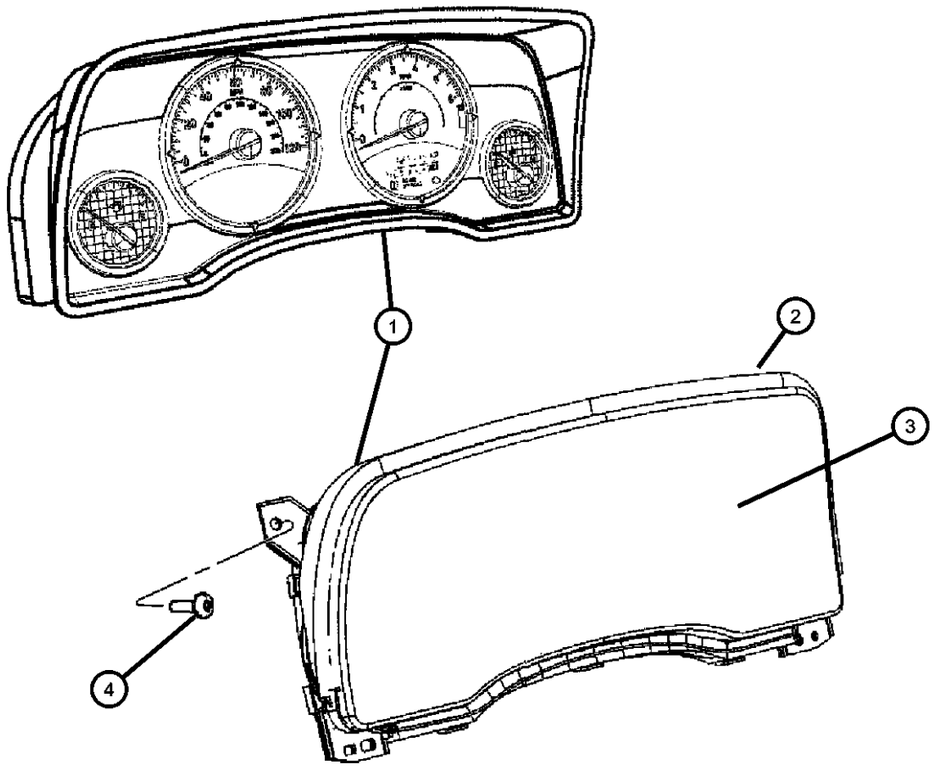

ITEM	PART NUMBER	QTY	LINE	SERIES	BODY	ENGINE	TRANS	TRIM	DESCRIPTION
1									CLUSTER
	05107007AB	1	J, T, U		49, 74				[JDJ,JPH]
	05107008AB	1	J, T, U		49, 74				[JCB,JPH]
	05107014AE	1	J, T, U		49, 74				[JCB,JFJ,JBD]
	05107016AE	1	J, T, U		49, 74	ED3			[JDJ,JFJ,JBD]
	05107018AB	1	J, T, U		49, 74	ECD			[JDJ]
	05107005AB	1	J, T, U		49, 74				[JDJ,JE8]
	05107006AB	1	J, T, U		49, 74				[JCB,JE8]
	05172241AA	1	J, T, U		49, 74				[JCB,JPH,JBD]
	05107023AB	1	J, T, U		49, 74	ED3			[JCE]
	05107025AB	1	J, T, U		49, 74	ECD			[JCE]
	05172238AA	1	J, T, U		49, 74				[JCB,JFJ]
	05172239AA	1	J, T, U		49, 74	ED3			[JDJ,JFJ]
	05172240AA	1	J, T, U		49, 74				[JDJ,JPH,JBD]
2									MASK, Instrument Cluster
	68001784AA	1	J, T, U		49, 74				Base
	68001785AA	1	J, T, U		49, 74				Hi line
3									LENS, Instrument Cluster
	68001786AA	1	J, T, U		49, 74				Base
	68001787AA	1	J, T, U		49, 74				Hi line
4	06101946	4							SCREW, Tapping, Cluster attaching

COMPASS/PATRIOT (MK)

SERIES	LINE	BODY	ENGINE	TRANSMISSION
H = HIGHLINE L = LOWLINE P = PREMIUM	J = JEEP - 4WD T = JEEP - 2WD	49 = HATCHBACK TYPE #2 74 = SPORT UTILITY 4-DR TYPE #4	ED3 = 2.4L 4 Cyl DOHC 16V Dual VVT Engine	DD7 = 5-Speed Manual T355 Transmission DEF = 6-Speed Manual Aisin BG6 Trans DAV = Continuously Variable Transmission DAW = Cont.Var. w/Off-Rd Crawl Ratio Trans

AR = use ase required - = Non illustrrated part

Radios
Figure 08A-310

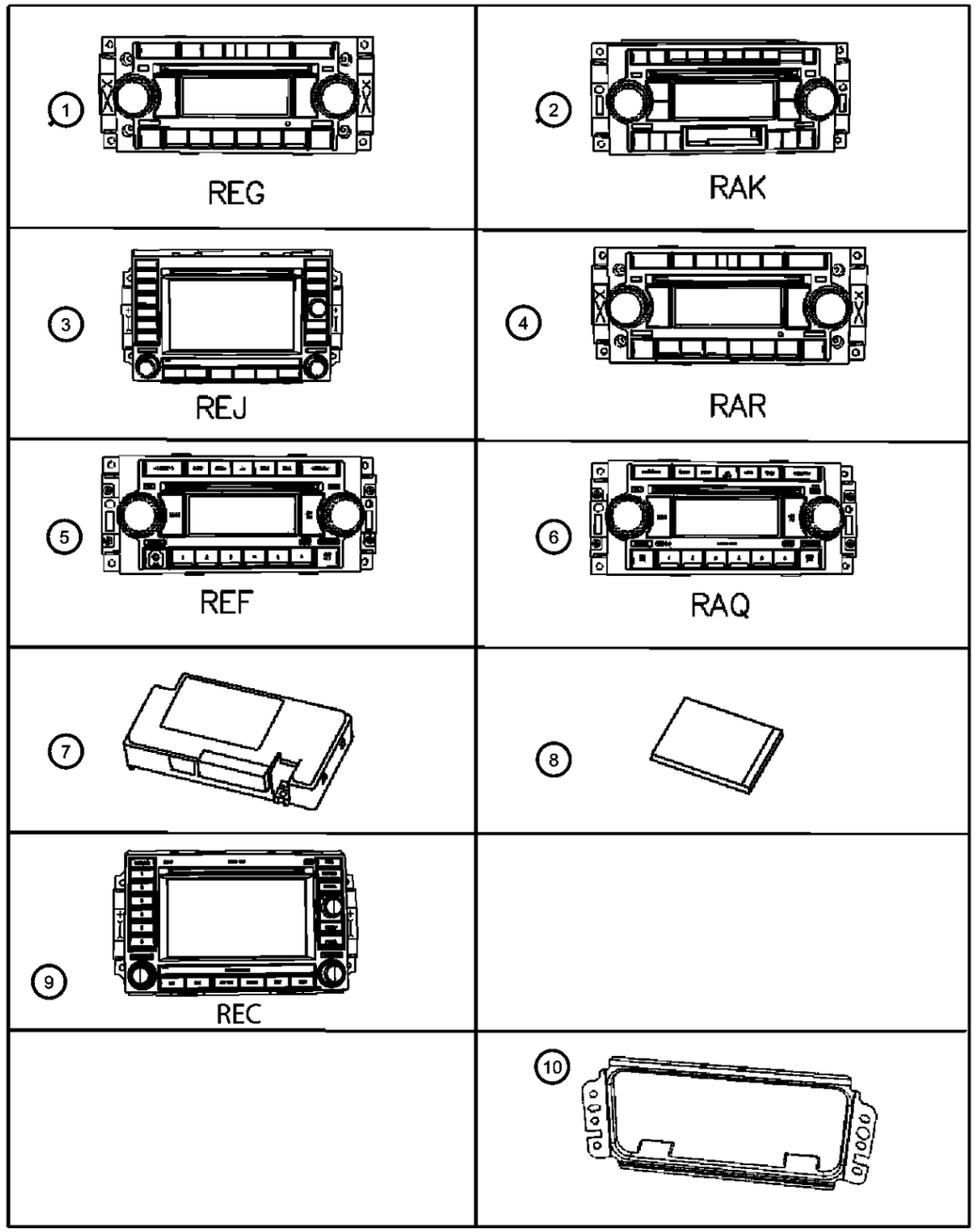

ITEM	PART NUMBER	QTY	LINE	SERIES	BODY	ENGINE	TRANS	TRIM	DESCRIPTION
1	05091509AG	1	J, T, U		49, 74				RADIO, AM/FM with CD and Equalizer, [REG]
2	05091523AL	1							RADIO, AM/FM/Cassette With CD, [RAK]
3	05064191AE	1	J, T, U		49, 74				RADIO, AM/FM CD W/NAV/DVD & CD-CTRL, [REJ]
4	05064362AA	1	J, T, U		49, 74				RADIO, AM/FM with CD and Equalizer, [RAR]
5	05064173AG	1	J, T, U		49, 74				RADIO, AM/FM with CD and Equalizer, [REF]
6	05091175AB	1	J, T, U		49, 74				RADIO, AM/FM with CD and Equalizer, [RAQ]
7	05064070AE	1	J, T, U		49, 74				MODULE, Telematics, [RSP]
8	56038650AC	1							COMPACT DISC, Navigation, Europe Only
9	05064184AD	1	J, T, U		49, 74				RADIO, AM/FM CD W/NAV/DVD & CD-CTRL, [REC]
10									BRACKET, Radio
	05291822AB	1							Without [REJ]
	05291823AB	1							With [REJ]
-11	06101809	1							NUT AND WASHER, Hex, M8x1.25, Ground Strap To Hood Hinge
-12	06034939	1	J		49				SCREW, SCREW, Ground Strap to Hood
-13	06034939	1							SCREW, Hex Flange Head, M6x1.0x16.0, Ground Strap To Head, (NOT SERVICED)

COMPASS/PATRIOT (MK)

SERIES	LINE	BODY	ENGINE	TRANSMISSION
H = HIGHLINE L = LOWLINE P = PREMIUM	J = JEEP - 4WD T = JEEP - 2WD	49 = HATCHBACK TYPE #2 74 = SPORT UTILITY 4-DR TYPE #4	ED3 = 2.4L 4 Cyl DOHC 16V Dual VVT Engine	DD7 = 5-Speed Manual T355 Transmission DEF = 6-Speed Manual Aisin BG6 Trans DAV = Continuously Variable Transmission DAW = Cont.Var. w/Off-Rd Crawl Ratio Trans

Antenna
Figure 08A-315

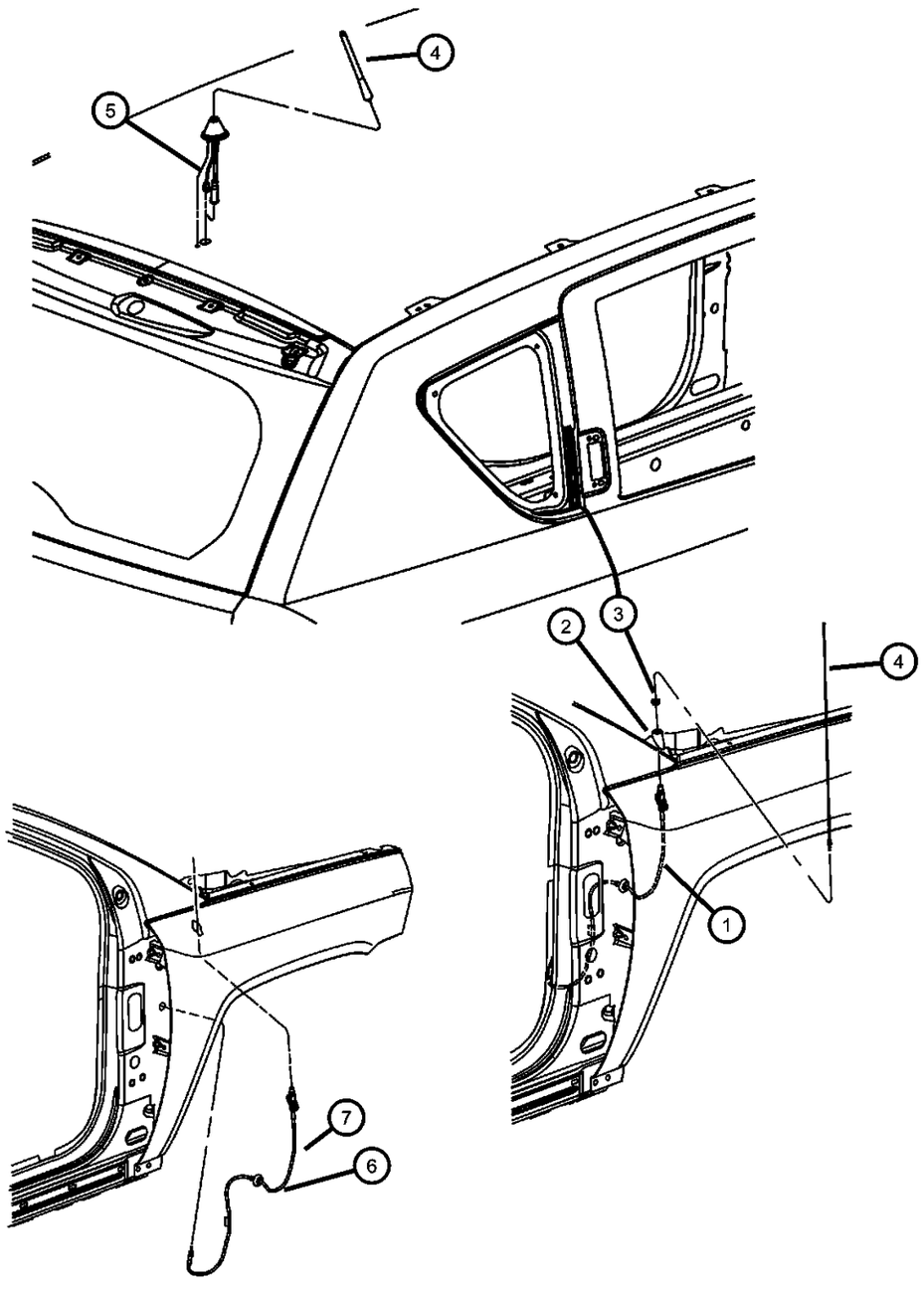

ITEM	PART NUMBER	QTY	LINE	SERIES	BODY	ENGINE	TRANS	TRIM	DESCRIPTION
1									BASE, Antenna
	04672389AB	1	J, T, U		49				
	05064279AB	1	J, T, U		74				
2									ADAPTER, Antenna
	04672390AA	1	J, T, U		49				
	05064280AA	1	J, T, U		74				
3	56007570	1							NUT, M6x1, Antenna Cable & Body Assy to Fender
4									MAST, Antenna
	04671906AA	1							[RDB]
	56043311AA	1							RDD] after 06/19/06
5	04671904AD	1	J, T, U		49, 74				ANTENNA, Base Cable And Bracket
6									CABLE, Antenna Extension
	04672302AC	1	J, T, U		49, 74				[RDD]
	04672396AD	1	J, T, U		49, 74				[RDB]
7									CABLE, Antenna
	05064282AB	1	J, T		49, 74				Export
	56040823AB	1							

COMPASS/PATRIOT (MK)

SERIES	LINE	BODY	ENGINE	TRANSMISSION
H = HIGHLINE L = LOWLINE P = PREMIUM	J = JEEP - 4WD T = JEEP - 2WD	49 = HATCHBACK TYPE #2 74 = SPORT UTILITY 4-DR TYPE #4	ED3 = 2.4L 4 Cyl DOHC 16V Dual VVT Engine	DD7 = 5-Speed Manual T355 Transmission DEF = 6-Speed Manual Aisin BG6 Trans DAV = Continuously Variable Transmission DAW = Cont.Var. w/Off-Rd Crawl Ratio Trans

Antenna GPS
Figure 08A-320

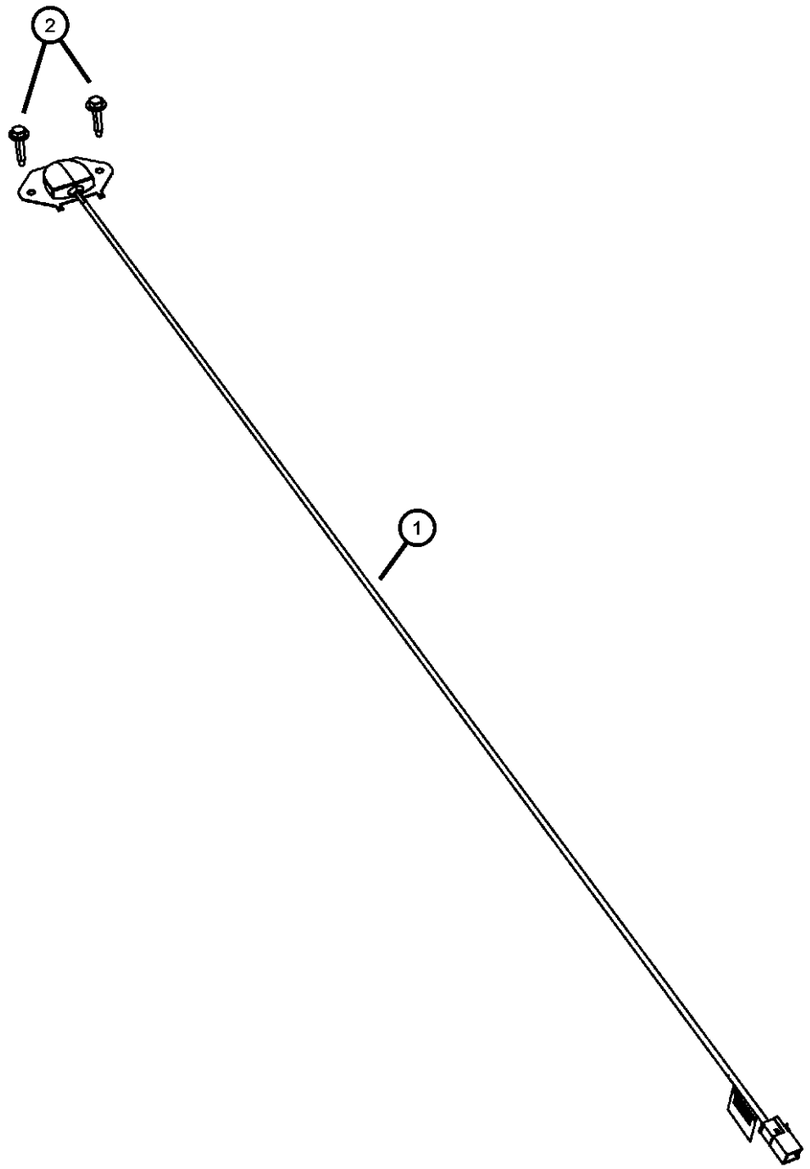

ITEM	PART NUMBER	QTY	LINE	SERIES	BODY	ENGINE	TRANS	TRIM	DESCRIPTION
1	56038630AC	1	J, T, U		49, 74				ANTENNA, GPS
2	06101946	2	J		49				SCREW, Tapping

COMPASS/PATRIOT (MK)

SERIES	LINE	BODY	ENGINE	TRANSMISSION
H = HIGHLINE L = LOWLINE P = PREMIUM	J = JEEP - 4WD T = JEEP - 2WD	49 = HATCHBACK TYPE #2 74 = SPORT UTILITY 4-DR TYPE #4	ED3 = 2.4L 4 Cyl DOHC 16V Dual VVT Engine	DD7 = 5-Speed Manual T355 Transmission DEF = 6-Speed Manual Aisin BG6 Trans DAV = Continuously Variable Transmission DAW = Cont.Var. w/Off-Rd Crawl Ratio Trans

AR = use ase required - = Non illustrrated part

Speakers
Figure 08A-325

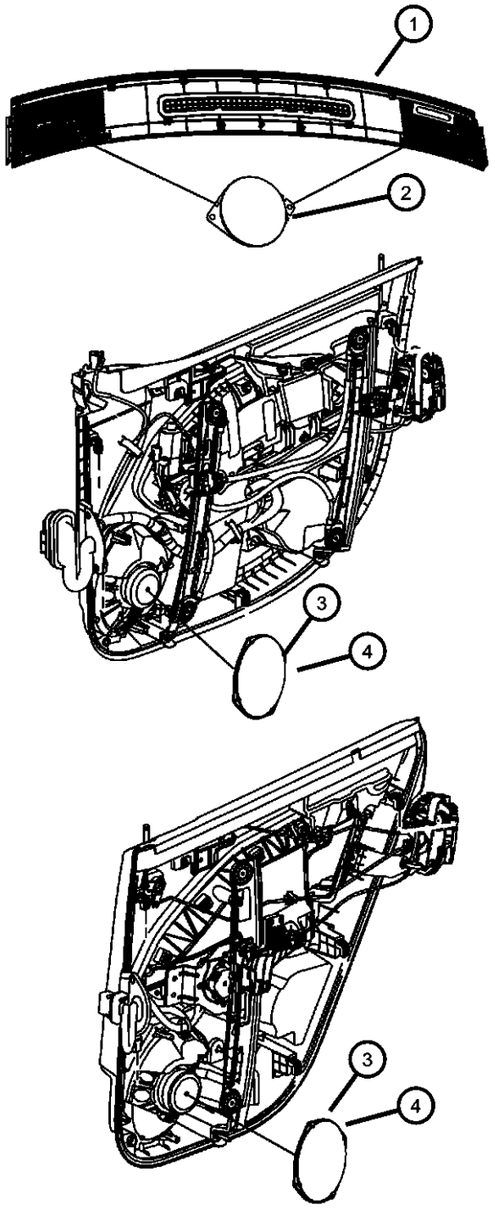

ITEM	PART NUMBER	QTY	LINE	SERIES	BODY	ENGINE	TRANS	TRIM	DESCRIPTION
1									COVER, Instrument Panel
	0YF33DK7AA	1	J, T, U		49				[KA]
	0YF33XDVAA	1	J, T, U		49				[DA]
	1AV82DK7AA	1	J, T, U		74				[KA]
	1AV82XDVAA	1	J, T, U		74				[DA]
2									SPEAKER, Instrument Panel
	05059068AB	1	J, T, U		49, 74				[RFS]
	05091017AA	2	J, T, U		49, 74				[RC9]
3									SPEAKER, 6"X9"
	05059063AC	1	J, T		49				[RC9]
		1	U		49				[RC9]
	05091019AB	1	J		49				[RCD]
		1	U		74				[RCD]
		1	J, T		74				[RCD]
4	05059063AB	1							SPEAKER, Rear, 6x9, [RC9]

COMPASS/PATRIOT (MK)

SERIES	LINE	BODY	ENGINE	TRANSMISSION
H = HIGHLINE L = LOWLINE P = PREMIUM	J = JEEP - 4WD T = JEEP - 2WD	49 = HATCHBACK TYPE #2 74 = SPORT UTILITY 4-DR TYPE #4	ED3 = 2.4L 4 Cyl DOHC 16V Dual VVT Engine	DD7 = 5-Speed Manual T355 Transmission DEF = 6-Speed Manual Aisin BG6 Trans DAV = Continuously Variable Transmission DAW = Cont.Var. w/Off-Rd Crawl Ratio Trans

AR = use ase required - = Non illustrrated part

Subwoofer and Amplifier
Figure 08A-330

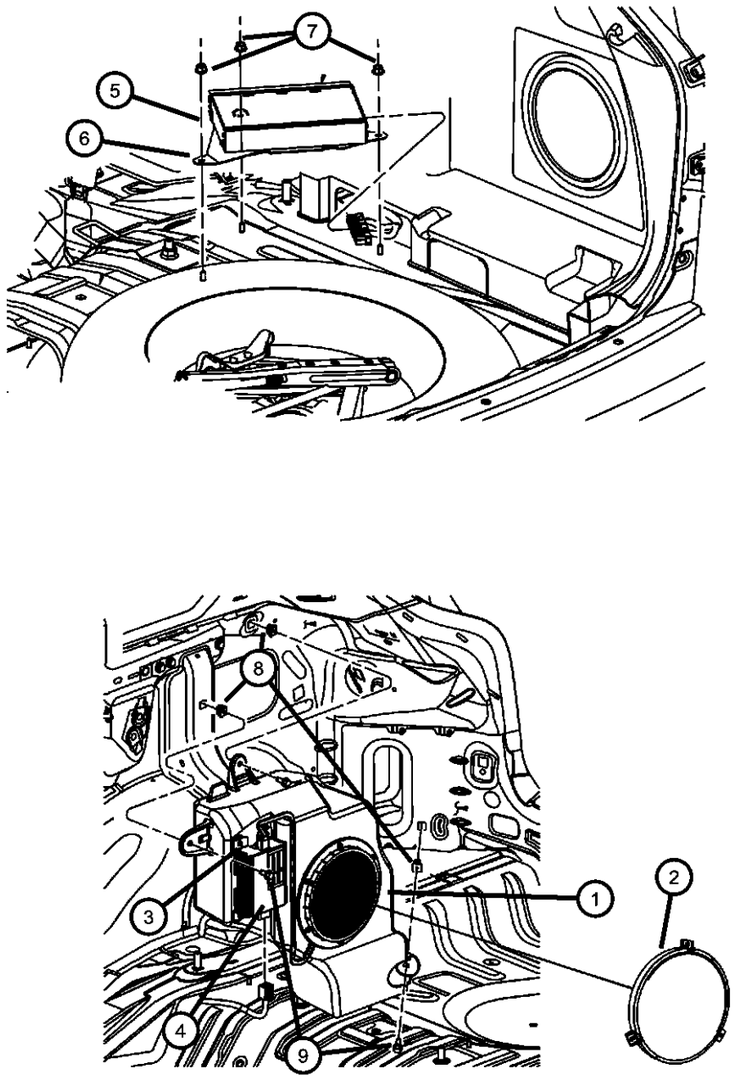

ITEM	PART NUMBER	QTY	LINE	SERIES	BODY	ENGINE	TRANS	TRIM	DESCRIPTION
1	68001775AA	1	J, T, U		49, 74				ENCLOSURE, Speaker
2	68002196AA	1	J, T, U		49, 74				AMPLIFIER
3	06104368AA	1	J, T, U		49, 74				SCREW, Enclosure to quarter inner
4	06104368AA	1							SPEAKER, Sub Woofer, Serviced in enclosure, (NOT SERVICED)
5	05064118AD	1							AMPLIFIER, Audio
6	05175457AA	1							BRACKET, Amplifier
7	06501730	3	J, T, U		49, 74				NUT, Retainer, M6 x 1.00, Amplifier attaching
8	06506955AA	1	J, T, U		49, 74				NUT, Snap In, Enclosure attaching
9	06104368AA	1	J		49				SCREW

COMPASS/PATRIOT (MK)

SERIES	LINE	BODY	ENGINE	TRANSMISSION
H = HIGHLINE L = LOWLINE P = PREMIUM	J = JEEP - 4WD T = JEEP - 2WD	49 = HATCHBACK TYPE #2 74 = SPORT UTILITY 4-DR TYPE #4	ED3 = 2.4L 4 Cyl DOHC 16V Dual VVT Engine	DD7 = 5-Speed Manual T355 Transmission DEF = 6-Speed Manual Aisin BG6 Trans DAV = Continuously Variable Transmission DAW = Cont.Var. w/Off-Rd Crawl Ratio Trans

AR = use ase required - = Non illustrrated part

Liftgate Speaker System
Figure 08A-335

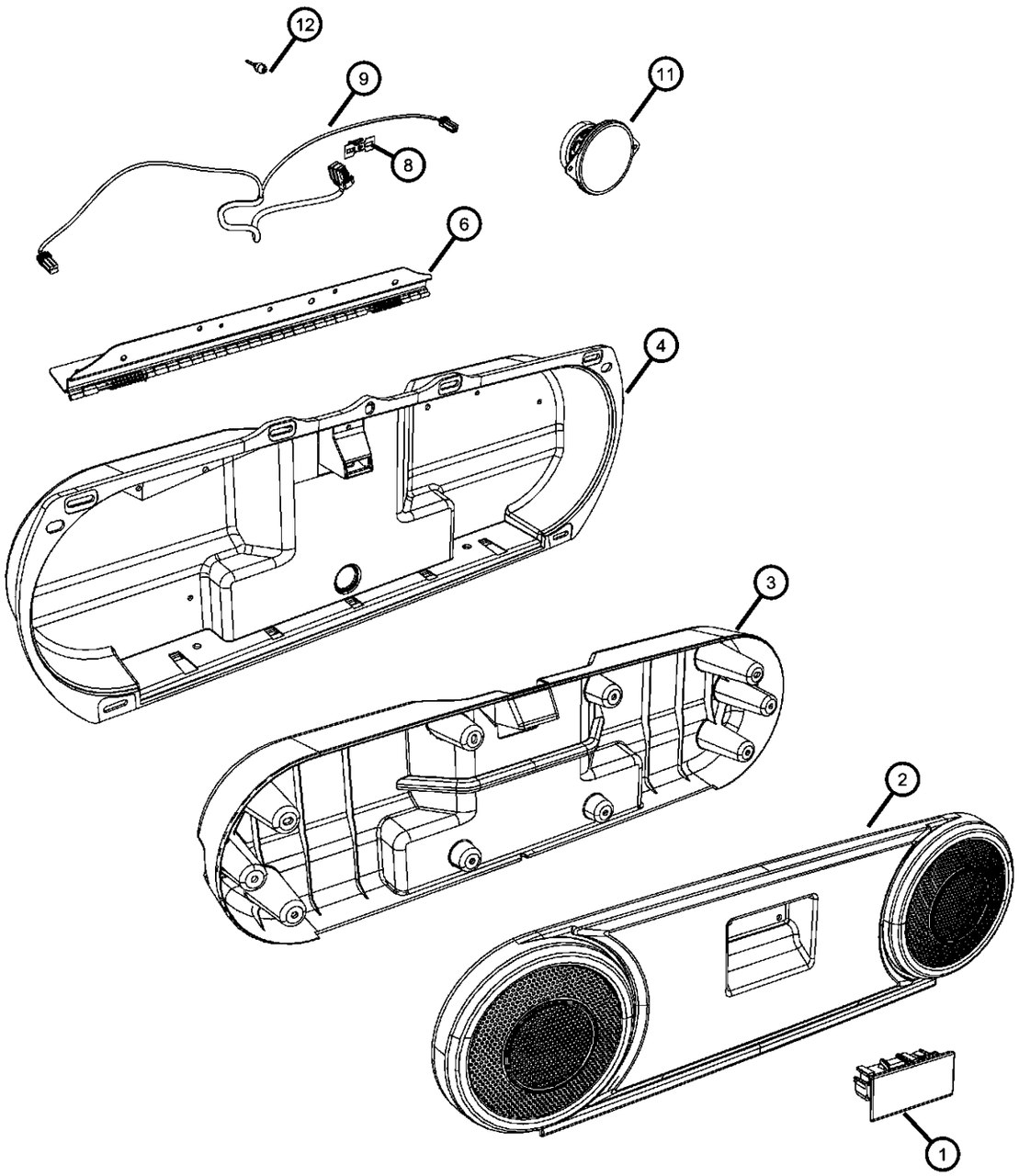

ITEM	PART NUMBER	QTY	LINE	SERIES	BODY	ENGINE	TRANS	TRIM	DESCRIPTION
1									HANDLE
	1DK62BDAAB	1	J, T, U		49, 74				[DA]
	1DK62DK7AB	1	J, T, U		49, 74				[KA]
2									PANEL, Speaker
	1DR92DK7AA	1							[KA]
	1DR92XDVAA	1							[DA]
3									PANEL, Speaker
	1DR93DK7AA	1							[KA]
	1DR93XDVAA	1							[DA]
4									PANEL, Speaker
	1DR91DK7AA	1							[KA]
	1DR91XDVAA	1							[DA]
-5	05183413AA	3							SCREW
6	05183428AA	1							HINGE
-7	05183414AA	10							SCREW
8	05183416AA	4							CLIP, Z-Axis
9	05183417AA	1							WIRING, Speaker
-10	05183415AA	4							SCREW
11	05059068AB	1							SPEAKER, Instrument Panel
12	05191887AA	1							BUMPER, Liftgate

COMPASS/PATRIOT (MK)

SERIES	LINE	BODY	ENGINE	TRANSMISSION
H = HIGHLINE L = LOWLINE P = PREMIUM	J = JEEP - 4WD T = JEEP - 2WD	49 = HATCHBACK TYPE #2 74 = SPORT UTILITY 4-DR TYPE #4	ED3 = 2.4L 4 Cyl DOHC 16V Dual VVT Engine	DD7 = 5-Speed Manual T355 Transmission DEF = 6-Speed Manual Aisin BG6 Trans DAV = Continuously Variable Transmission DAW = Cont.Var. w/Off-Rd Crawl Ratio Trans

Satellite Radio System
Figure 08A-340

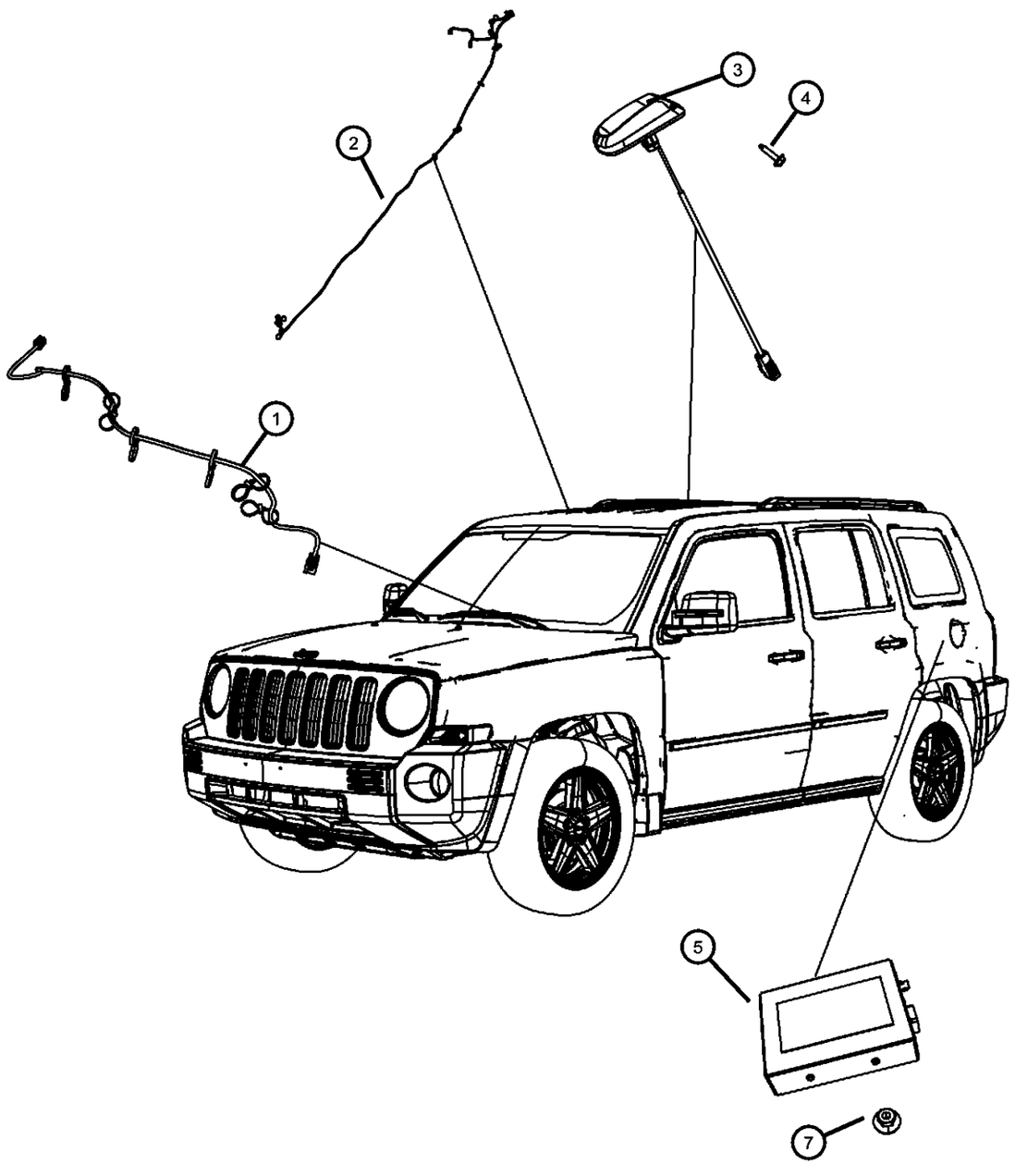

ITEM	PART NUMBER	QTY	LINE	SERIES	BODY	ENGINE	TRANS	TRIM	DESCRIPTION
NOTES: Item #5 for warranty replacement order Z5064075ad									
1	04795761AC	1	J, T, U		49, 74				WIRING, Radio, Satellite radio instrument panel
2	04795760AF	1	J, T, U		49, 74				WIRING, Radio, Satellite radio body
3	05150048AB	1	J, T, U		49, 74				ANTENNA, Satellite
4	06101946	4	J, T, U		49, 74				SCREW, Tapping
5	05064075AD	1	J, T, U		49, 74				RECEIVER, Satellite
-6									BRACKET, Satellite Receiver
	68032962AA	1	J, T, U		49				
		1	J, T, U		74				
7	06501730	3	J, T, U		49, 74				NUT, Retainer, M6 x 1.00, Satellite Radio Unit to Body

COMPASS/PATRIOT (MK)

SERIES	LINE	BODY	ENGINE	TRANSMISSION
H = HIGHLINE	J = JEEP - 4WD	49 = HATCHBACK TYPE #2	ED3 = 2.4L 4 Cyl DOHC 16V Dual VVT Engine	DD7 = 5-Speed Manual T355 Transmission
L = LOWLINE	T = JEEP - 2WD	74 = SPORT UTILITY 4-DR TYPE #4		DEF = 6-Speed Manual Aisin BG6 Trans
P = PREMIUM				DAV = Continuously Variable Transmission
				DAW = Cont.Var. w/Off-Rd Crawl Ratio Trans

AR = use ase required - = Non illustrrated part

Floor Console
Figure 08A-405

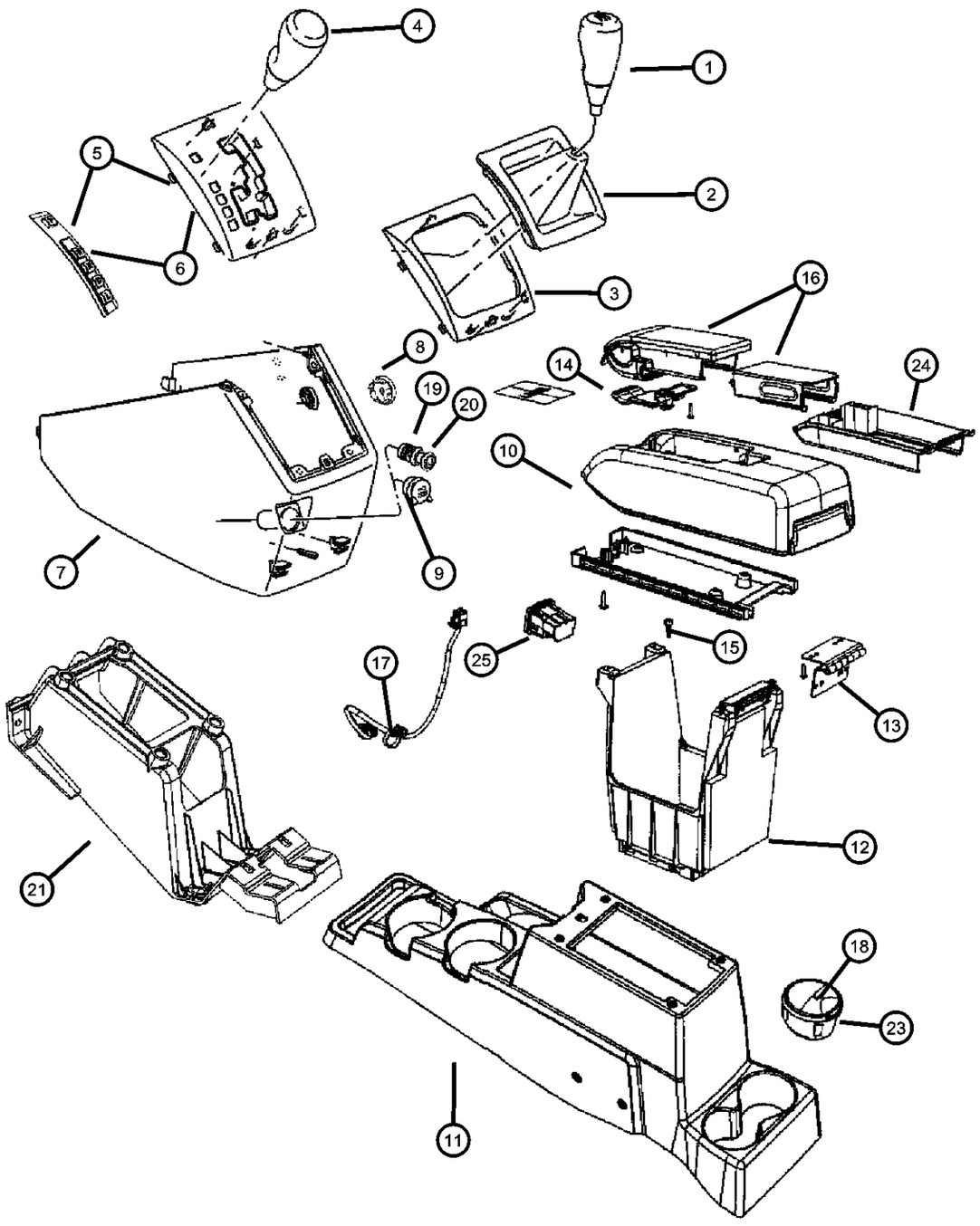

ITEM	PART NUMBER	QTY	LINE	SERIES	BODY	ENGINE	TRANS	TRIM	DESCRIPTION
1									KNOB, Gearshift
	05273462AB	1	J, T, U		49, 74		DEF		
	05273342AB	1	J, T, U		49, 74		DD7		
2	05273434AB	1					DD7		BOOT, Gearshift
3									BEZEL, Console Shifter
	0YZ99DSFAA	1	J, T, U		49, 74		DD7, DEF		[DA]
		1	J, T, U		49, 74		DD7, DEF		[KA]
		1					DD7		[DA]
		1					DD7		[KA]
4	05273590AB	1					DAV, DAW		KNOB, Gearshift
5									BEZEL, Console PRNDL
	0ZH70DX9AB	1	J, T, U		49, 74		DAV		[DA][DHD]
		1	J, T, U		49, 74		DAV		[KA][DHD]
	1FX88DX9AA	1	J, T, U		49, 74		DAW		[DA]
		1	J, T, U		49, 74		DAW		[KA]
6									BEZEL, Console PRNDL
	1AW70DX9AB	1	J, T, U		49, 74		DAV		[DA]
		1	J, T, U		49, 74		DAV		[KA]
7									HOUSING, Console
	1BL89DK7AA	1	J, T, U		49, 74				[KA]
	1BL89XDVAA	1	J, T, U		49, 74				[DA]
8									PLUG, Console, Plastic
	1FW94DK7AA	1	J, T, U		49, 74				[KA]
	1FW94XD-VAA	1	J, T, U		49, 74				[DA]
9	04685591AD	1	J, T, U		49, 74				CAP, Power Outlet
10									ARMREST, Console
	1EE201K7AA	1	J, U		49, 74				[KA]
	1EE201DVAA	1	T		49, 74				[DA]
		1	J, U		49, 74				[DA]
		1	T		49, 74				[KA]
11									BASE, Floor Console
	1FA041DVAB	1	J, U		49, 74				[DA]

COMPASS/PATRIOT (MK)

SERIES	LINE	BODY	ENGINE	TRANSMISSION
H = HIGHLINE L = LOWLINE P = PREMIUM	J = JEEP - 4WD T = JEEP - 2WD	49 = HATCHBACK TYPE #2 74 = SPORT UTILITY 4-DR TYPE #4	ED3 = 2.4L 4 Cyl DOHC 16V Dual VVT Engine	DD7 = 5-Speed Manual T355 Transmission DEF = 6-Speed Manual Aisin BG6 Trans DAV = Continuously Variable Transmission DAW = Cont.Var. w/Off-Rd Crawl Ratio Trans

Floor Console
Figure 08A-405

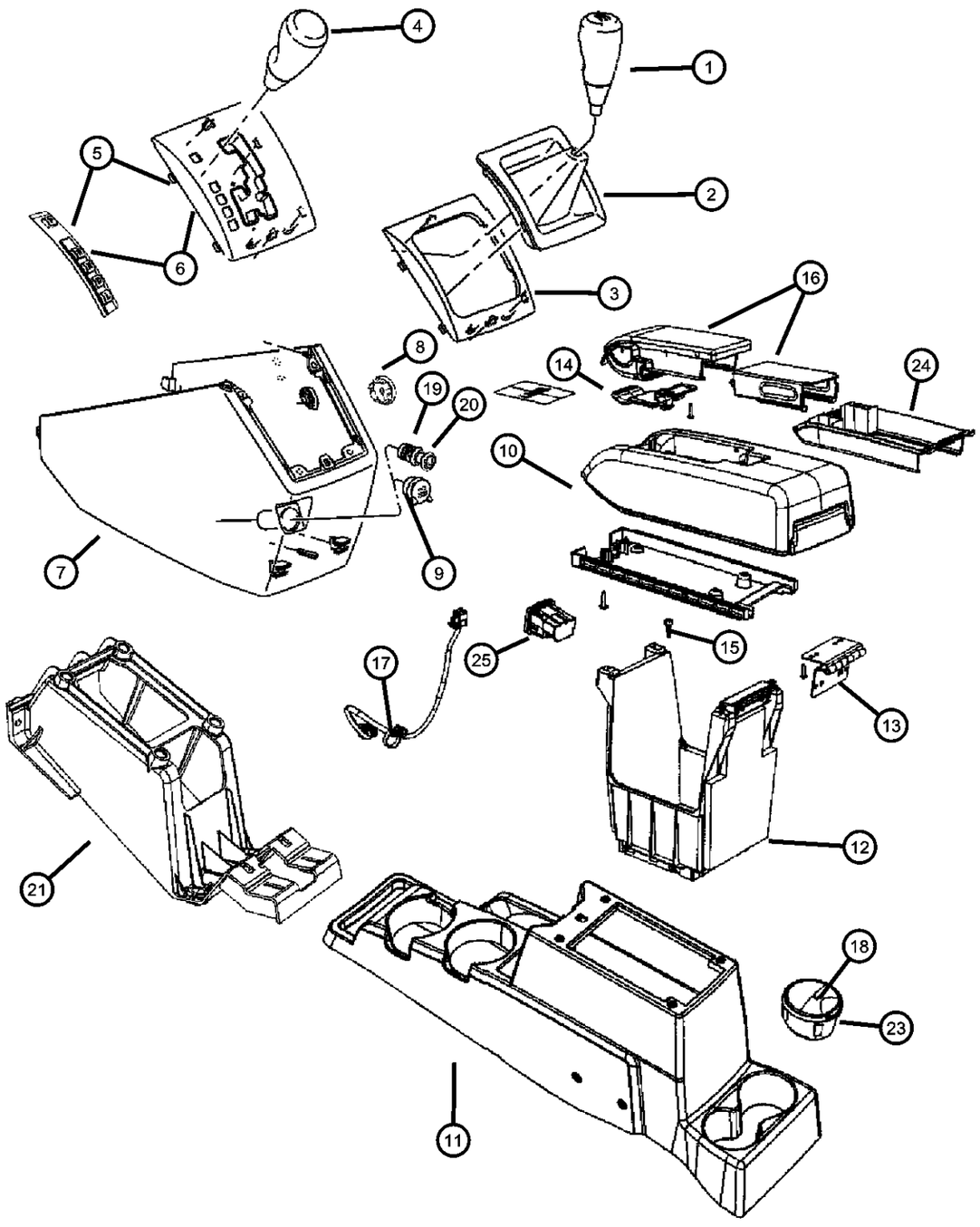

ITEM	PART NUMBER	QTY	LINE	SERIES	BODY	ENGINE	TRANS	TRIM	DESCRIPTION
		1	T		49, 74				[DA]
	1FA041K7AB	1	T		49, 74				[KA]
		1	J, U		49, 74				[KA]
12									BIN, Floor Console
	1FA05DX9AA	1	J, U		49, 74				[KA][AWP]
	1FA051DVAB	1	J, U		49, 74				[DA]
		1	T		49, 74				[DA]
		1	J, U		49, 74				[DA][AWP]
	1FA051K7AB	1	J, U		49, 74				[KA]
		1	T		49, 74				[KA]
13									HINGE, Floor Console Lid
	68019160AA	1	U, J		49, 74				
		1	T		49, 74				
	05189963AA	1	J		49				
14									LATCH, Armrest Lid
	1EE341DVAA	1	J		49				[DA]
	1EE341K7AA	1	J		49				[KA]
	1EE34DX9AA	1	T		49, 74				[DA]
		1	T		49, 74				[KA]
		1	J, U		49, 74				[DA][AWP]
		1	J, U		49, 74				[KA][AWP]
15									BUMPER, Floor Console
	05189964AA	1	J, U		49, 74				
		1	T		49, 74				
16									SLIDE, Console
	1FA151DVAB	1	J, U		49, 74				[DA], Upper
		1	T		49, 74				[DA], Upper
	1FA151K7AB	1	J, U		49, 74				[KA], Upper
		1	T		49, 74				[KA], Upper
17	04795945AB	1	J, U		49, 74				WIRING, Console
18	04595833AB	1	J, T, U		49, 74				SMOKERS PACKAGE
19	04685590	1	J, T, U		49, 74				BASE, Cigar Lighter

COMPASS/PATRIOT (MK)

SERIES	LINE	BODY	ENGINE	TRANSMISSION
H = HIGHLINE L = LOWLINE P = PREMIUM	J = JEEP - 4WD T = JEEP - 2WD	49 = HATCHBACK TYPE #2 74 = SPORT UTILITY 4-DR TYPE #4	ED3 = 2.4L 4 Cyl DOHC 16V Dual VVT Engine	DD7 = 5-Speed Manual T355 Transmission DEF = 6-Speed Manual Aisin BG6 Trans DAV = Continuously Variable Transmission DAW = Cont.Var. w/Off-Rd Crawl Ratio Trans

Floor Console
Figure 08A-405

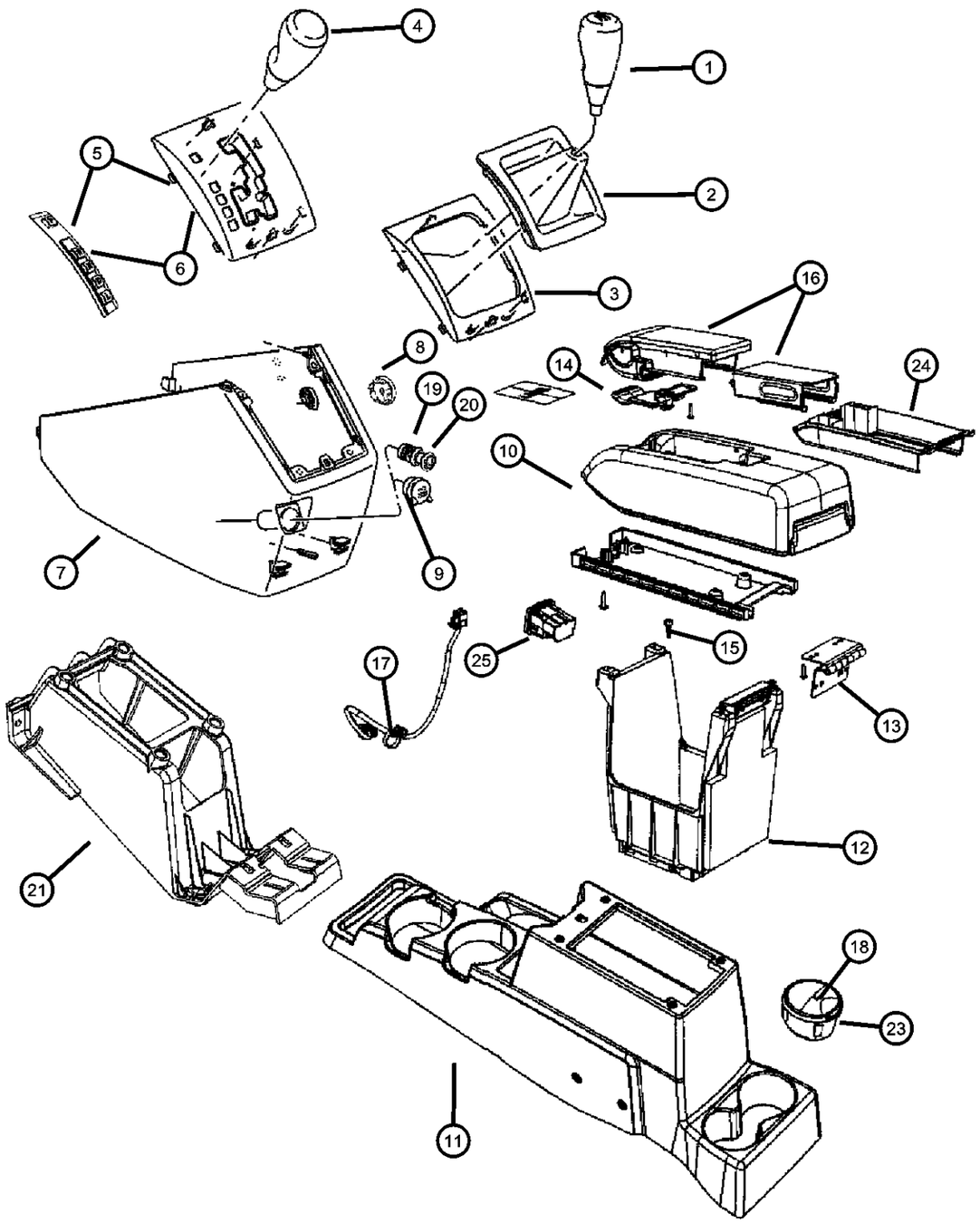

ITEM	PART NUMBER	QTY	LINE	SERIES	BODY	ENGINE	TRANS	TRIM	DESCRIPTION
20	04685536	1	J, T, U		49, 74				KNOB AND ELEMENT, Cigar Lighter
21	05291763AB	1	J, T, U		49, 74		DD7, DEF		BRACKET, Gearshift
-22	04664360AA	1	J, T, U		49, 74		DAV, DAW		BRACKET, Gearshift Cable
23	04595665AB	1	J, T, U		49, 74				ASH RECEIVER, Floor Console
24									SLIDE, Console
	1FA161DVAA	1	T		49, 74				[DA], Lower
		1	J, U		49, 74				[DA], Lower
	1FA161K7AA	1	T		49, 74				[KA], Lower
		1	J, U		49, 74				[KA], Lower
25									POWER OUTLET, Inverter
	04671955AB	1	T		49, 74				
		1	J, U		49, 74				
-26									PLUG, Power Outlet
	1AG14DK7AA	1	J, U		49, 74				[KA] 110V invertor delete
		1	T		49, 74				[KA] 110V invertor delete
	1AG14XDVAA	1	J, U		49, 74				[DA] 110V invertor delete
		1	T		49, 74				[DA] 110V invertor delete
-27									COIN BOX, Console
	1JW49DK7AA	1	T		49, 74				[KA]
	1JW49XDVAA	1	T		49, 74				[DA]

COMPASS/PATRIOT (MK)

SERIES	LINE	BODY	ENGINE	TRANSMISSION
H = HIGHLINE L = LOWLINE P = PREMIUM	J = JEEP - 4WD T = JEEP - 2WD	49 = HATCHBACK TYPE #2 74 = SPORT UTILITY 4-DR TYPE #4	ED3 = 2.4L 4 Cyl DOHC 16V Dual VVT Engine	DD7 = 5-Speed Manual T355 Transmission DEF = 6-Speed Manual Aisin BG6 Trans DAV = Continuously Variable Transmission DAW = Cont.Var. w/Off-Rd Crawl Ratio Trans

Group - 9

Engine Mounting

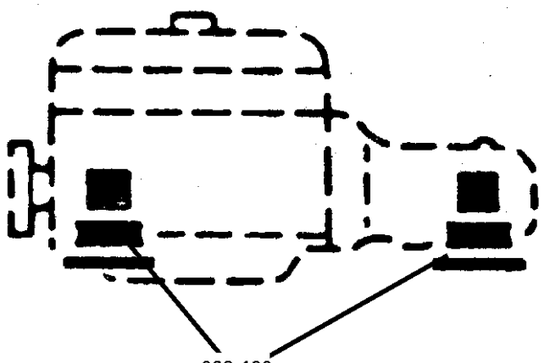

009-100

009-100 Engine Mounting 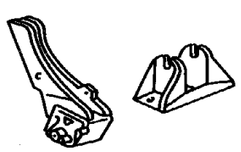			

Group - 9 Engine Mounting

Illustration Title — Group-Fig. No.

Engine Mounting

Engine Mount, Right ..... Fig. 9 - 110
Engine Mount, Transmission ..... Fig. 9 - 120
Torque Support, Front ..... Fig. 9 - 130
Torque Support, Rear ..... Fig. 9 - 140

Engine Mount, Right
Figure 9-110

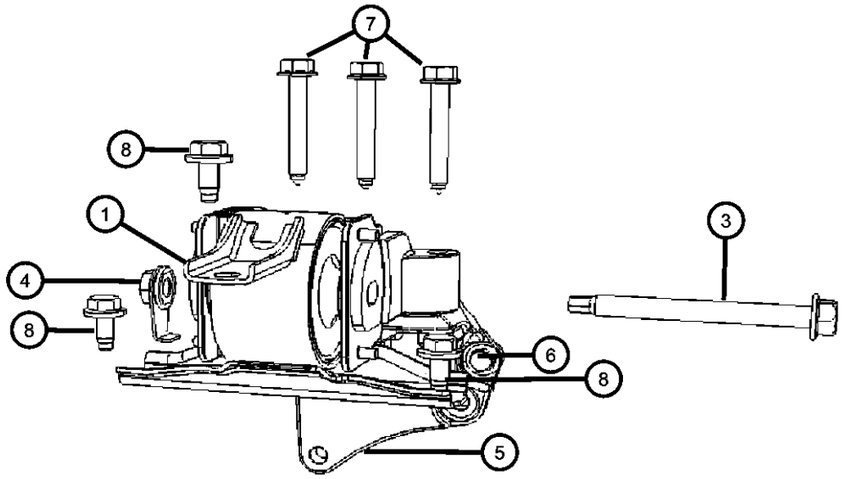

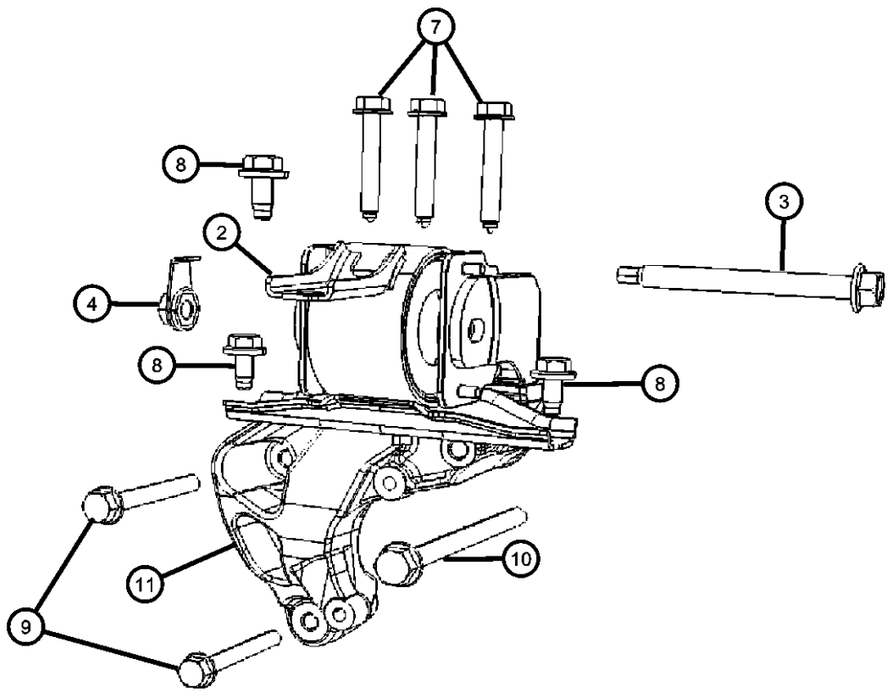

ITEM	PART NUMBER	QTY	LINE	SERIES	BODY	ENGINE	TRANS	TRIM	DESCRIPTION
NOTES: Sales Codes: [ECD] = 2.0L 4 Cyl. DOHC Diesel 16V Engine [ED3] = 2.4L 4 CYL DOHC 16V Dual VTT Engine [DAV] = Continuously Variable Transaxle [DAW] = Continuously Variable W/Off-Road Crawl Ratio									
1									INSULATOR, Engine Mount
	05105489AD	1				ED3			Includes Items 3 and 4
	05105667AD	1	J, T, U				DAV, DAW		
2	05105492AD	1				ECD			INSULATOR, Engine Mount, Includes Items 3 and 4
3	06508529AA	1					DAV, DAW		BOLT, Engine Mount Bracket to Insulator
4									NUT
	06508684AA	1				ECD			Engine Mount Bracket to Insulator
		1				ED3			Engine Mount Bracket to Insulator
5									BRACKET, Engine Support
	05105585AC	1				ED3			
	05105588AC	1				ECD			
6	06500584	1				ED3			SCREW AND WASHER, Hex Head, M8x1.25x30, Engine Support Bracket to Power Steering Bracket
7	06508235AA	3							BOLT, Frt. Mount to Engine Bracket
8	06104412AA	3							BOLT
9	06104225AA	2	J, T, U			ECD			BOLT, Hex Head, Engine Support Bracket to Block
10	06104230AA	1				ECD			BOLT, Engine Support Bracket to Block
11	05105588AD	1	T, U, J			ECD			BRACKET, Engine Support

COMPASS/PATRIOT (MK)

SERIES	LINE	BODY	ENGINE	TRANSMISSION
H = HIGHLINE L = LOWLINE P = PREMIUM	J = JEEP - 4WD T = JEEP - 2WD	49 = HATCHBACK TYPE #2 74 = SPORT UTILITY 4-DR TYPE #4	ED3 = 2.4L 4 Cyl DOHC 16V Dual VVT Engine	DD7 = 5-Speed Manual T355 Transmission DEF = 6-Speed Manual Aisin BG6 Trans DAV = Continuously Variable Transmission DAW = Cont.Var. w/Off-Rd Crawl Ratio Trans

Engine Mount, Transmission
Figure 9-120

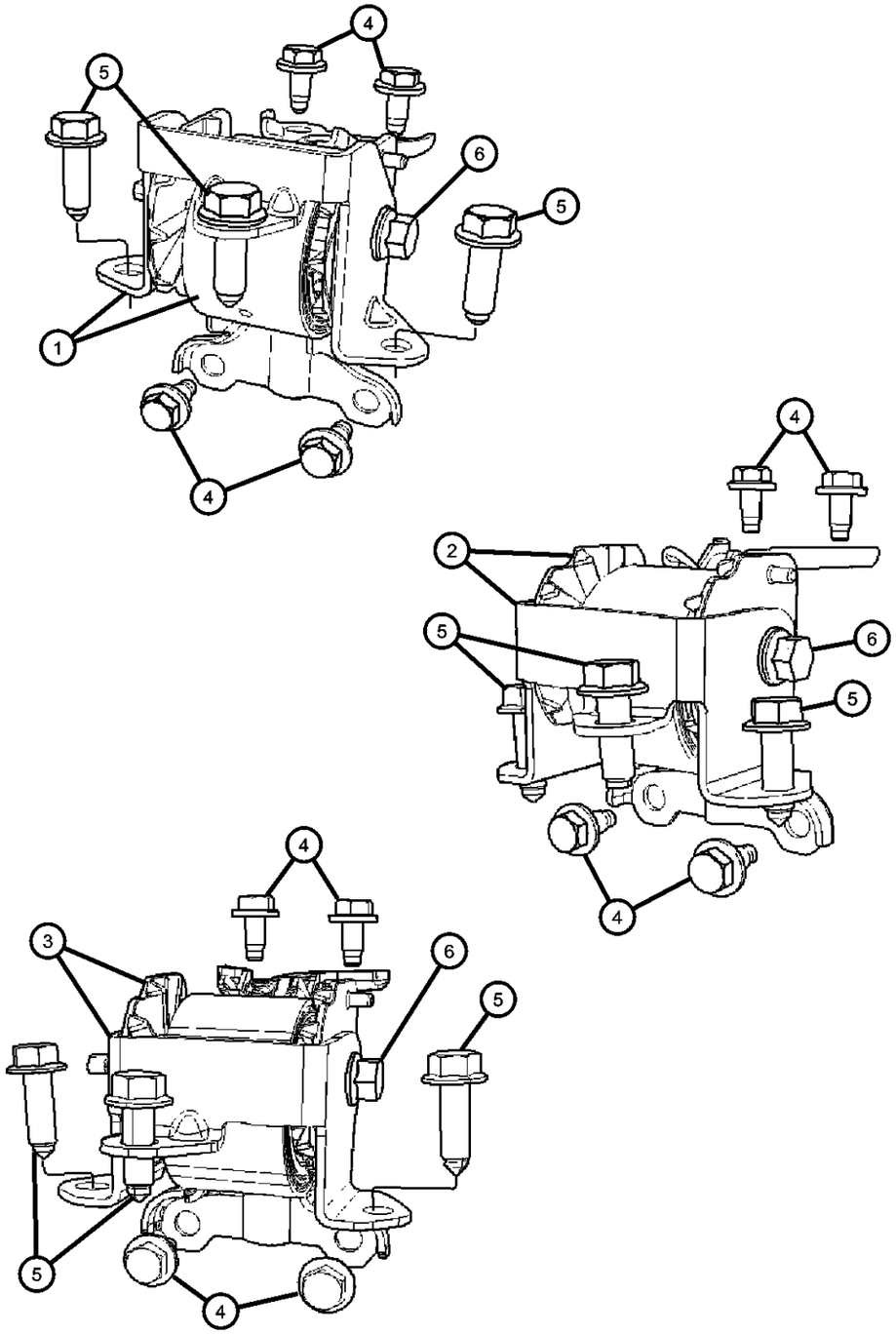

ITEM	PART NUMBER	QTY	LINE	SERIES	BODY	ENGINE	TRANS	TRIM	DESCRIPTION
Sales Codes: [ED3] = 2.4L Gas Engine [DAV] = Continuously Variable Transmission [DD7] = 5 Speed Manual Transmission									
1									INSULATOR, Engine Mount
	05105492AD	1				ECD			
	05105489AD	1	J			ED3			
2									INSULATOR, Engine Mount
	05105492AD	1				ECD			
	05105669AC	1					DD7		
3	05105671AC	1					DEF		SUPPORT, Engine Mount
4	06104412AA	4							BOLT
5	06508530AA	3							SCREW
6	06508530AA	3							BOLT, Serviced With Mount, (NOT SERVICED)

COMPASS/PATRIOT (MK)

SERIES	LINE	BODY	ENGINE	TRANSMISSION
H = HIGHLINE L = LOWLINE P = PREMIUM	J = JEEP - 4WD T = JEEP - 2WD	49 = HATCHBACK TYPE #2 74 = SPORT UTILITY 4-DR TYPE #4	ED3 = 2.4L 4 Cyl DOHC 16V Dual VVT Engine	DD7 = 5-Speed Manual T355 Transmission DEF = 6-Speed Manual Aisin BG6 Trans DAV = Continuously Variable Transmission DAW = Cont.Var. w/Off-Rd Crawl Ratio Trans

AR = use ase required - = Non illustrrated part

Torque Support, Front
Figure 9-130

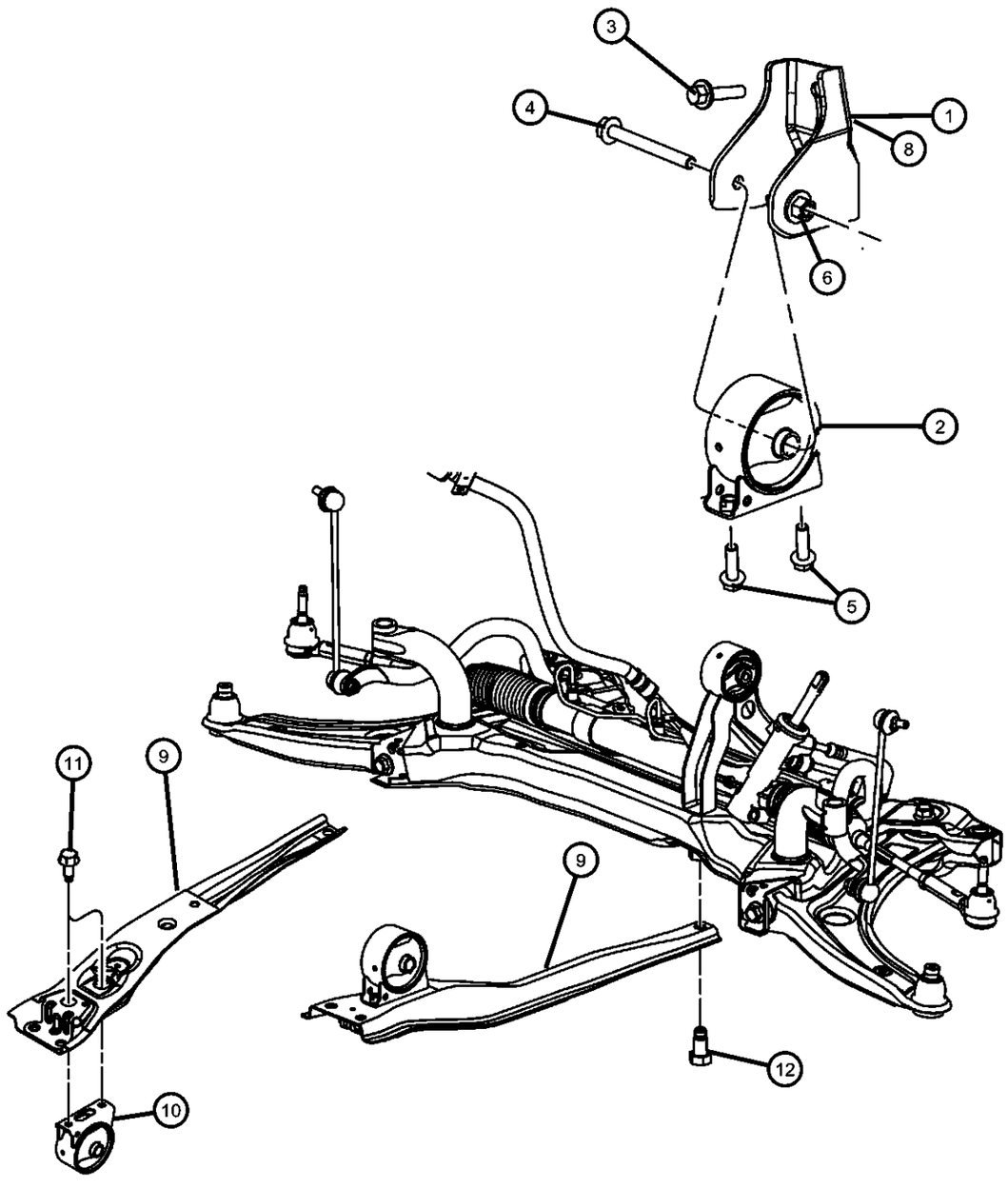

ITEM	PART NUMBER	QTY	LINE	SERIES	BODY	ENGINE	TRANS	TRIM	DESCRIPTION
Sales Codes:									
1									BRACKET, Engine Mount
	05105596AB	1				ED3			
	05105597AC	1				ECD			
2									INSULATOR
	05105493AB	1					DD7, DEF		[DD7,DEF]
	05105494AB	1					DAV		[DAV]
3	MF140283	2	J, T, U						BOLT, Hex Flange Head, M12x30, Torque MTG Bracket To Diff Front
4	06508588AA	1							SCREW
5	06105062AA	2							BOLT, Hex Head, Mount To Crossmember
6	06105062AA	2							NUT, Serviced with Bracket Only, (NOT SERVICED)
-7	05105290AA	1							SUPPORT, Engine Mount
8	05105416AD	1	T			ED3			BRACKET, Torque Reaction, Forward
9	05105290AA	1							SUPPORT, Engine Mount
10									INSULATOR
	05105493AB	1					DD7, DEF		
	05105494AB	1					DAV, DAW		
	05105495AD	1	J, U				DD7, DEF		[X84] AWD [MDX]
	05105498AD	1	J, U				DAV, DAW		AWD,CVT
11	06105062AA	2							BOLT, Hex Head
12	06105075AA	1							BOLT, Hex Head

COMPASS/PATRIOT (MK)

SERIES	LINE	BODY	ENGINE	TRANSMISSION
H = HIGHLINE L = LOWLINE P = PREMIUM	J = JEEP - 4WD T = JEEP - 2WD	49 = HATCHBACK TYPE #2 74 = SPORT UTILITY 4-DR TYPE #4	ED3 = 2.4L 4 Cyl DOHC 16V Dual VVT Engine	DD7 = 5-Speed Manual T355 Transmission DEF = 6-Speed Manual Aisin BG6 Trans DAV = Continuously Variable Transmission DAW = Cont.Var. w/Off-Rd Crawl Ratio Trans

Torque Support, Rear
Figure 9-140

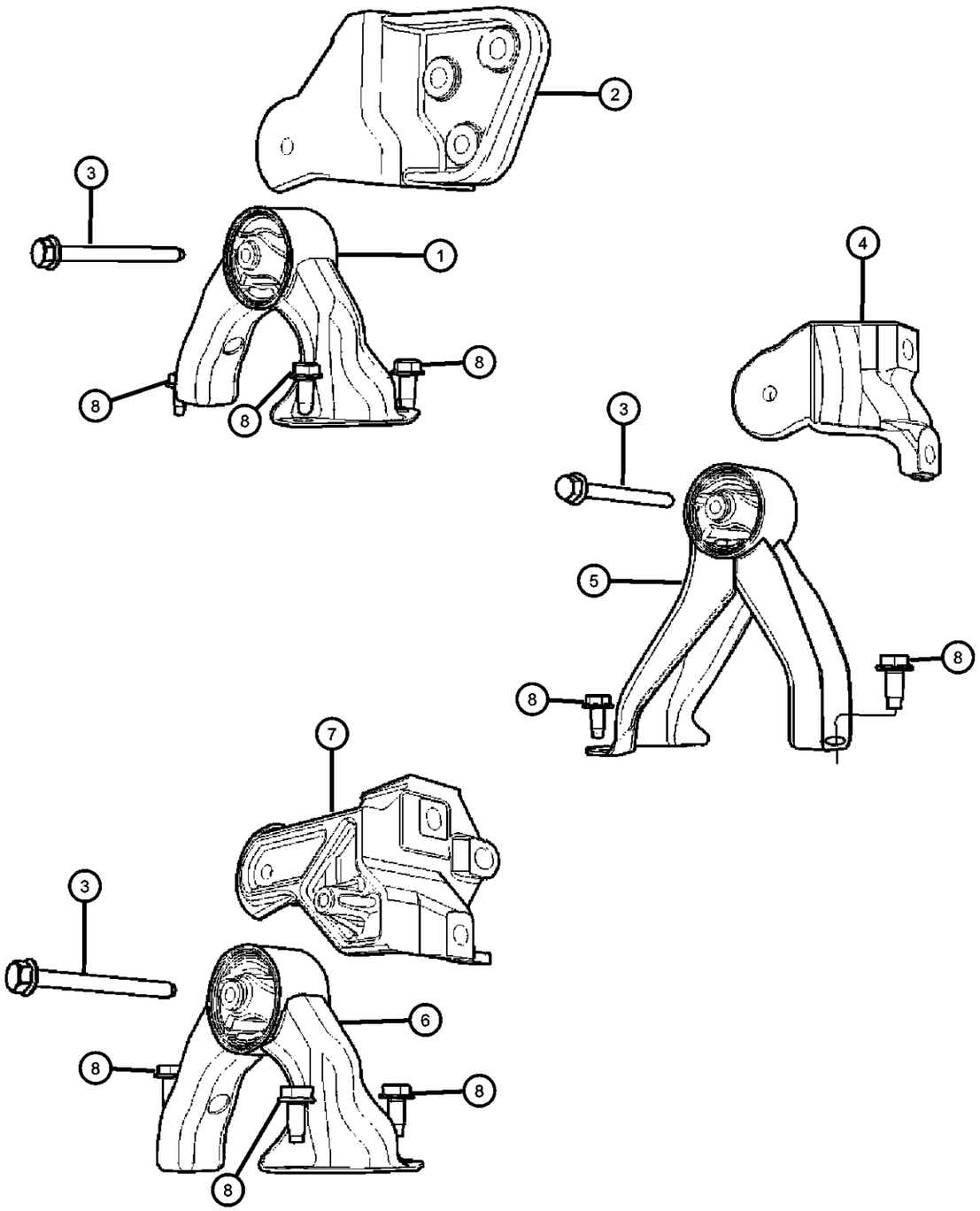

ITEM	PART NUMBER	QTY	LINE	SERIES	BODY	ENGINE	TRANS	TRIM	DESCRIPTION
1									SUPPORT
	05105499AD	1	T				DD7, DEF		FTX, FWD
		1	T				DD7, DEF		
	05105511AE	1	T				DAV, DAW		CVT,FWD
2	05105416AB	1	T			ED3			BRACKET, Torque Reaction
3	06508588AA	1							SCREW
4	05105409AD	1				ED3			BRACKET, Transmission Case Mounting
5									INSULATOR
	05105495AD	1					DD7		
	05105498AD	1					DAV		
6	05105511AE	1	T				DAV, DAW		SUPPORT
7	05105598AE	1	T			ECD			BRACKET, Torque Reaction
8	06105062AA	3							BOLT, Hex Head, Support Assy To Rail

COMPASS/PATRIOT (MK)

SERIES	LINE	BODY	ENGINE	TRANSMISSION
H = HIGHLINE L = LOWLINE P = PREMIUM	J = JEEP - 4WD T = JEEP - 2WD	49 = HATCHBACK TYPE #2 74 = SPORT UTILITY 4-DR TYPE #4	ED3 = 2.4L 4 Cyl DOHC 16V Dual VVT Engine	DD7 = 5-Speed Manual T355 Transmission DEF = 6-Speed Manual Aisin BG6 Trans DAV = Continuously Variable Transmission DAW = Cont.Var. w/Off-Rd Crawl Ratio Trans

AR = use ase required - = Non illustrrated part

Group - 2.0L

Engine 2.0L Four Cylinder

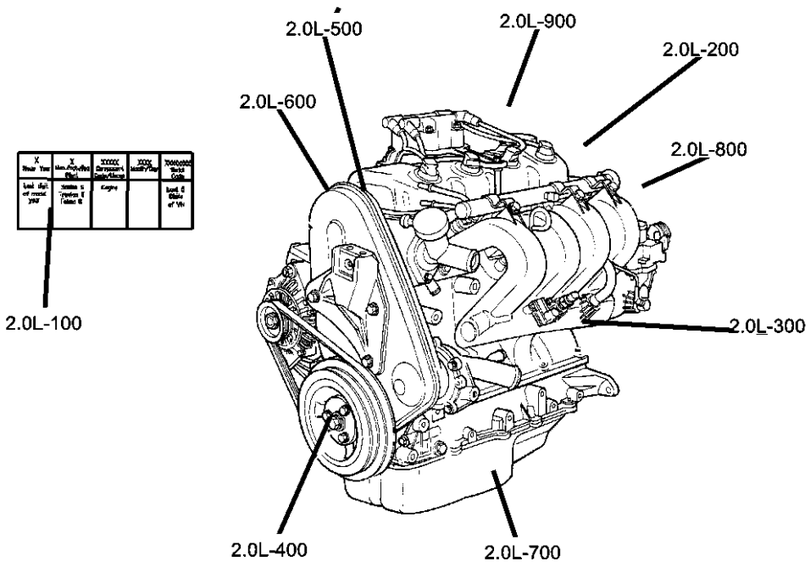

2.0L-100
Engine Identification

X Model Year	X Manufacturing Plant	XXXXX Component Code/Usage	XXXX Month/Day	XXXXXXXX Serial Code
Last digit of model year	Saltillo S Trenton T Toluca K	Engine 3.2L – 3.8L Usage Pass Car PC Truck T		Last 8 Digits of VIN

2.0L-200
Cylinder Head

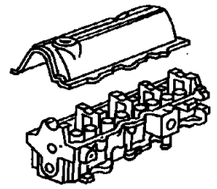

2.0L-300
Cylinder Block

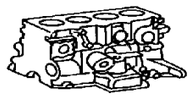

2.0L-400
Crankshaft, Piston, and Drive Plate

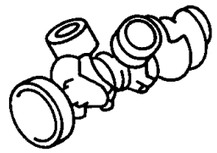

2.0L-500
Camshafts and Valves

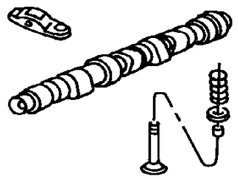

2.0L-600
Timing Belt and Cover

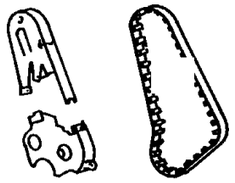

2.0L-700
Engine Oiling

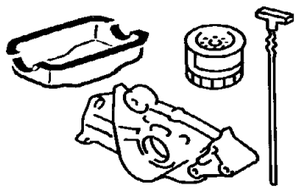

2.0L-800
Manifolds

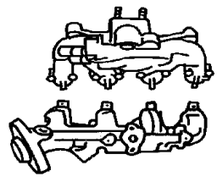

2.0L-900
Crankcase Ventilation

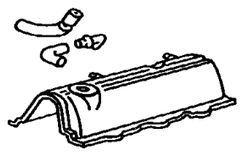

Group - 2.0L Engine 2.0L Four Cylinder

Illustration Title — Group-Fig. No.

Engine Identification
Engine Assembly And Identifcation 2.0L [ECN] ..... Fig. 2.0L - 110
Gasket Packages 2.0L [ECN] ..... Fig. 2.0L - 120
Engine Covers And Components 2.0L [ECN] ..... Fig. 2.0L - 130

Cylinder Head
Cylinder Head Cover And Components 2.0L [ECN] ..... Fig. 2.0L - 210
Cylinder Head And Components 2.0L [ECN] ..... Fig. 2.0L - 220

Cylinder Block
Engine Block And Components 2.0L [ECN] ..... Fig. 2.0L - 310

Crankshaft, Piston, and Drive Plate
Crankshaft Pistons And Driveplate 2.0L [ECN] ..... Fig. 2.0L - 410

Camshafts and Valves
Camshafts And Valves 2.0L [ECN] ..... Fig. 2.0L - 510

Timing Belt and Cover
Timing Chain And Cover 2.0L [ECN] ..... Fig. 2.0L - 610

Engine Oiling
Engine Oiling Pump, Balance Shafts And Oil Filter 2.0L [ECN] ..... Fig. 2.0L - 710

Manifolds
Intake Manifold And Components 2.0L [ECN] ..... Fig. 2.0L - 810
Exhaust Manifold And Components 2.0L [ECN] ..... Fig. 2.0L - 820

Crankcase Ventilation
Crankcase Ventilation 2.0L [ECN] ..... Fig. 2.0L - 910

Engine Assembly And Identifcation 2.0L [ECN]
Figure 2.0L-110

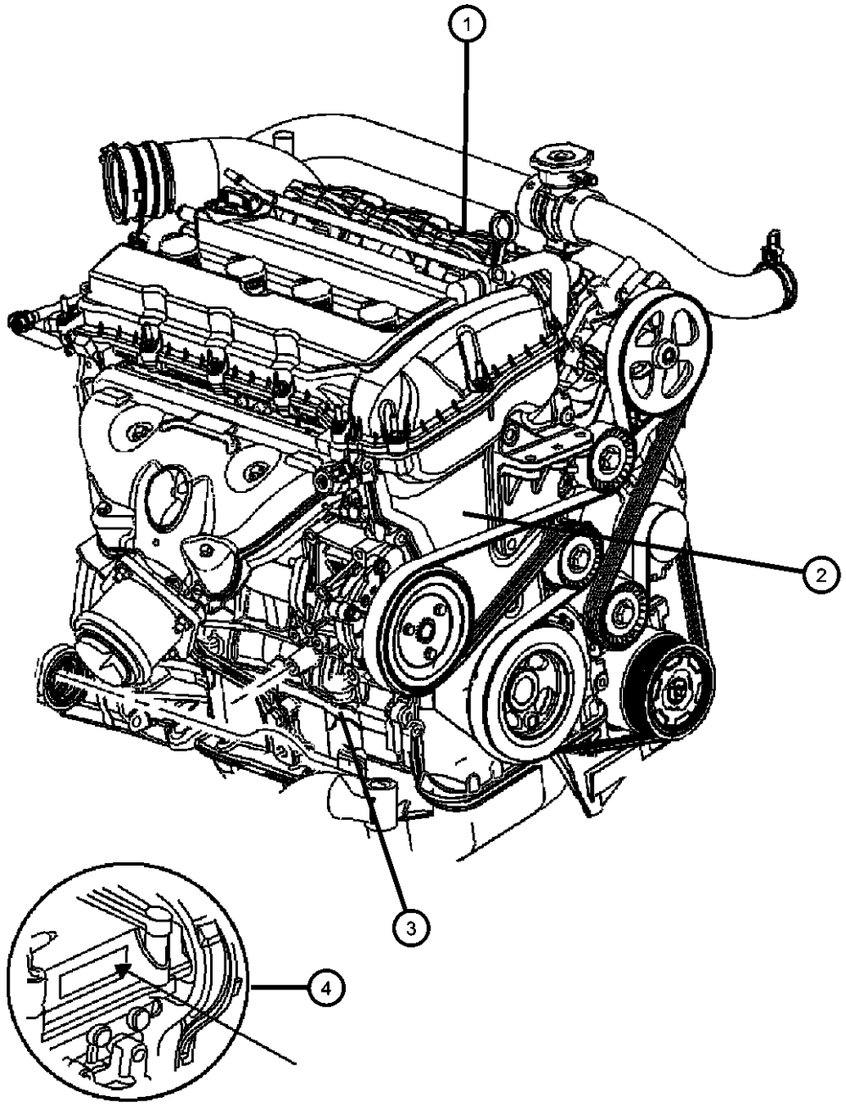

ITEM	PART NUMBER	QTY	LINE	SERIES	BODY	ENGINE	TRANS	TRIM	DESCRIPTION

NOTE:
The Following Parts Must Be Replaced When Ordering A Replacement Long Block:
Flex Plate To Clutch Bolts, Flex Plate To Crankshaft Bolts, Catalytic Converter Gasket, Intake And Exhaust Manifold Gaskets, Thermostat Housing
Water Pump Pipe O-Ring, Throttle Body Gasket.
The Following Parts Must Be Replaced When Ordering A Replacement Short Block:
Upper Engine Gasket Package, Flex Plate To Clutch Bolts, Flex Plate To Crankshaft Bolts, Catalytic Converter Gasket, Thermostat Housing “D“ Ri
The Engine Identifaction Label Contains: The Production Assembly Part Number And Displacement. It Is Located On The Valve Cover In The Rear
Long Block Contains: Complete Cylinder Head, [Intake Valves, Exhaust Valves, Valve Seals, Valve Retainers, Valve Springs, Camshafts, Camshat
Short Block Contains: Crankshaft, Pistons, Connecting Rods, Piston Rings, Crankshaft Bearings, Connecting Rod Bearings, Bedplate, Balance Sh
Sales Codes:
[DAV] = Continuously Variable Transmission
[DEF] = 6-Speed Manual Aisian BG6 Transmission
[DEK] = 6-Speed Manual Getrag DM76 Transmission
[DE0] = All 6-Speed Manual Transmissions
[DD0] = All 5-Speed Manual Transmissions
[DD7] = 5-Speed Manual T355 Transmission
[EBA] = 1.8L 4 Cylinder DOHC 16 Valve VVT Engine
[ECD] = 2.0L 4 Cylinder DOHC Diesel 16 Valve Engine
[ECN] = 2.0L 4 Cylinder DOHC 16 Valve VVT Engine
[EC0] = All 2.0L 4 Cylinder Gas Engines
[ED3] = 2.4L 4 Cylinder DOHC 16 Valve Duel VVT Engine
[ED4] = 2.4L 4 Cylinder DOHC 16 Valve Turbo Engine
[ED0] = All 2.4L 4 Cylinder Gas Engines
[NAA] = Federal Emissions
[NAE] = California Emisssions
[NAS] = 50 State Emissions
[NA1] = Export Emissions

1	06105062AA	3							ENGINE, Complete, Serviced By Long Block Or Short Block Only, (NOT SERVICED)
2									ENGINE, Long Block, See Note
	04884884AB	1	J, T, U		49	ECN			
		1	J, T, U		74	ECN			
3									ENGINE, Short Block, See Note
	05183905AA	1	J, T, U		49	ECN			
		1	J, T, U		74	ECN			
4		1							LABEL, Engine Identification, See Note, (NOT SERVICED)

COMPASS/PATRIOT (MK)

SERIES	LINE	BODY	ENGINE	TRANSMISSION
H = HIGHLINE L = LOWLINE P = PREMIUM	J = JEEP - 4WD T = JEEP - 2WD	49 = HATCHBACK TYPE #2 74 = SPORT UTILITY 4-DR TYPE #4	ED3 = 2.4L 4 Cyl DOHC 16V Dual VVT Engine	DD7 = 5-Speed Manual T355 Transmission DEF = 6-Speed Manual Aisin BG6 Trans DAV = Continuously Variable Transmission DAW = Cont.Var. w/Off-Rd Crawl Ratio Trans

Gasket Packages 2.0L [ECN]
Figure 2.0L-120

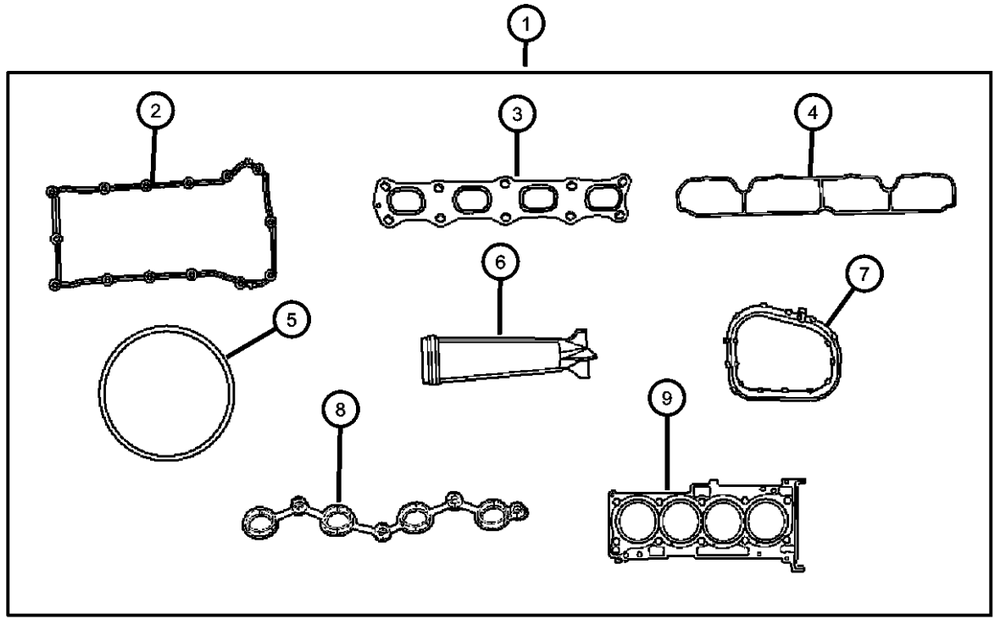

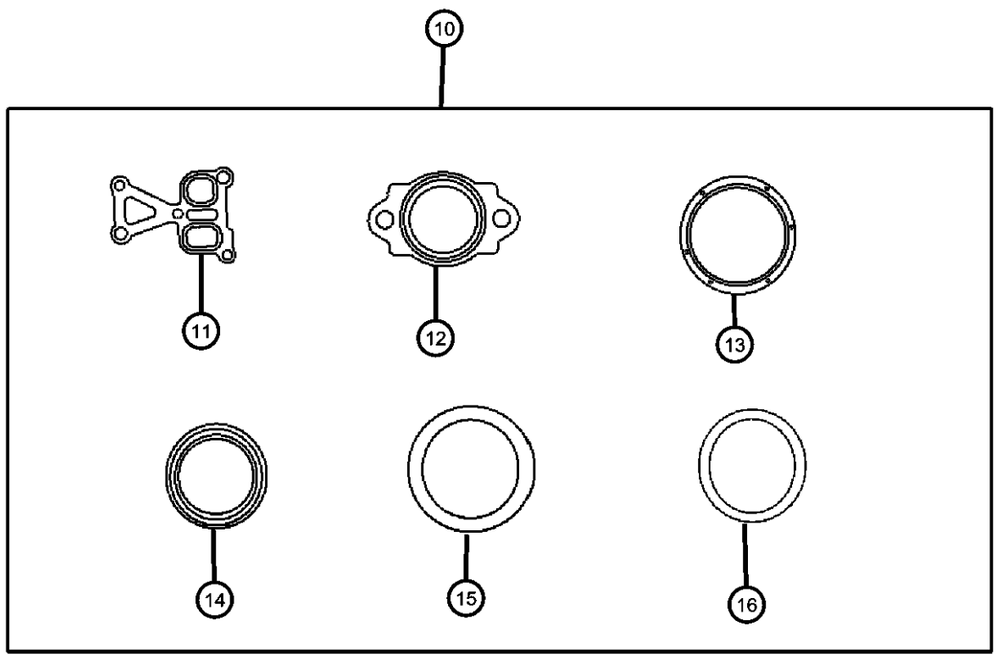

ITEM	PART NUMBER	QTY	LINE	SERIES	BODY	ENGINE	TRANS	TRIM	DESCRIPTION

NOTE:
Sales Codes:
[DAV] = Continuously Variable Transmission
[DEF] = 6-Speed Manual Aisian BG6 Transmission
[DEK] = 6-Speed Manual Getrag DM76 Transmission
[DE0] = All 6-Speed Manual Transmissions
[DD0] = All 5-Speed Manual Transmissions
[DD7] = 5-Speed Manual T355 Transmission
[EBA] = 1.8L 4 Cylinder DOHC 16 Valve VVT Engine
[ECD] = 2.0L 4 Cylinder DOHC Diesel 16 Valve Engine
[ECN] = 2.0L 4 Cylinder DOHC 16 Valve VVT Engine
[EC0] = All 2.0L 4 Cylinder Gas Engines
[ED3] = 2.4L 4 Cylinder DOHC 16 Valve Duel VVT Engine
[ED4] = 2.4L 4 Cylinder DOHC 16 Valve Turbo Engine
[ED0] = All 2.4L 4 Cylinder Gas Engines
[NAA] = Federal Emissions
[NAE] = California Emisssions
[NAS] = 50 State Emissions
[NA1] = Export Emissions

ITEM	PART NUMBER	QTY	LINE	SERIES	BODY	ENGINE	TRANS	TRIM	DESCRIPTION
1									GASKET PACKAGE, Engine Upper, Contains Items 2,3,4,5,6,7,8,9
	05189954AA	1	J, T, U		49	ECN			
		1	J, T, U		74	ECN			
2									GASKET, Cylinder Cover
	04884762AA	1	J, T, U		49	ECN, ED3			
		1	J, T, U		74	ECN, ED3			
3									GASKET, Exhaust Manifold
	1555A185	1	J, T, U		49	ECN, ED3			
		1	J, T, U		74	ECN, ED3			
4									GASKET, Intake Manifold
	04884550AB	1	J, T, U		49	ECN, ED3			
		1	J, T, U		74	ECN, ED3			
5									GASKET, Throttle Body
	04884551AA	1	J, T, U		49	ECN, ED3			
		1	J, T, U		74	ECN, ED3			
6									FILTER, Continuous Variable Valve Timing
	1028A025	1	J, T, U		74	ECN, ED3			
		1	J, T, U		49	ECN, ED3			

COMPASS/PATRIOT (MK)

SERIES	LINE	BODY	ENGINE	TRANSMISSION
H = HIGHLINE L = LOWLINE P = PREMIUM	J = JEEP - 4WD T = JEEP - 2WD	49 = HATCHBACK TYPE #2 74 = SPORT UTILITY 4-DR TYPE #4	ED3 = 2.4L 4 Cyl DOHC 16V Dual VVT Engine	DD7 = 5-Speed Manual T355 Transmission DEF = 6-Speed Manual Aisin BG6 Trans DAV = Continuously Variable Transmission DAW = Cont.Var. w/Off-Rd Crawl Ratio Trans

Gasket Packages 2.0L [ECN]
Figure 2.0L-120

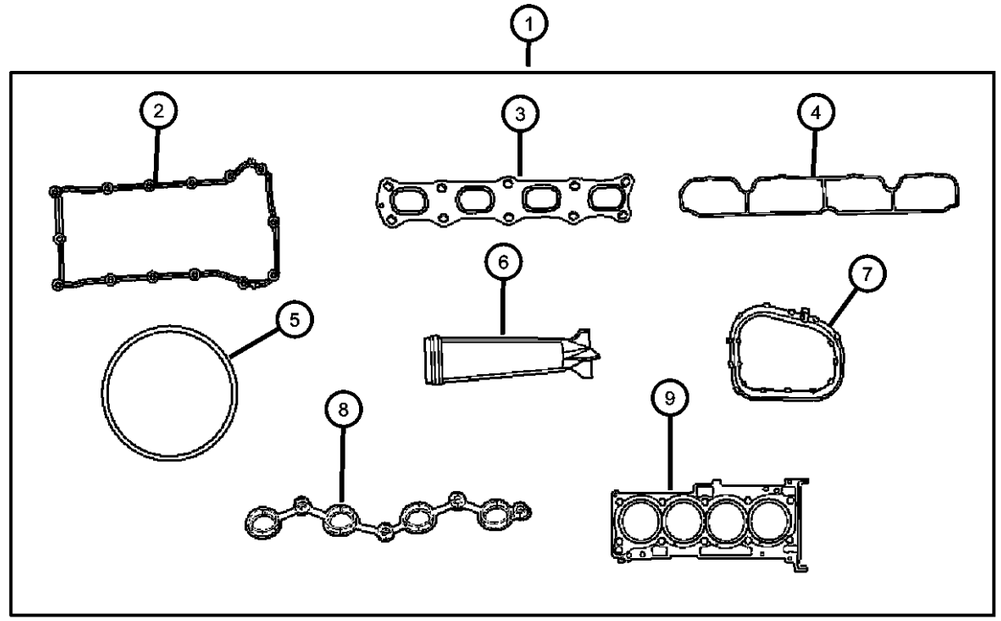

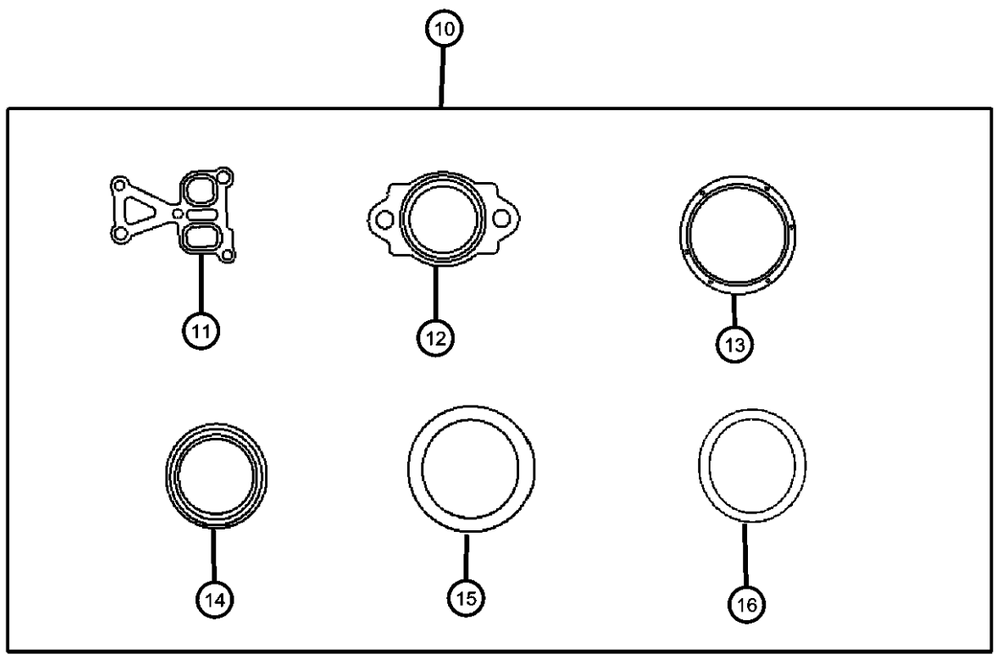

ITEM	PART NUMBER	QTY	LINE	SERIES	BODY	ENGINE	TRANS	TRIM	DESCRIPTION
7									SEAL, Coolant Outlet Adapter
	04884572AA	1	J, T, U		49	ECN, ED3			
		1	J, T, U		74	ED3, ECN			
8									GASKET, Coil
	04884765AA	1	J, T, U		49	ECN, ED3			
		1	J, T, U		74	ECN, ED3			
9									GASKET PACKAGE, Cylinder Head, Contains Item 6
	05189975AA	1	J, T, U		49	ECN			
		1	J, T, U		74	ECN			
10									GASKET PACKAGE, Engine Lower, Contains Items 11,12, 13, 14, 15, 16
	05189957AB	1	J, T, U		49	ECN			
		1	J, T, U		74	ECN			
11									GASKET, Water Pump Outlet
	04884696AA	1	J, T, U		49	ECN, ED3			
		1	J, T, U		74	ECN, ED3			
12									GASKET, Water Inlet
	04884703AA	1	J, T, U		49	ECN, ED3			
		1	J, T, U		74	ECN, ED3			
13									SEAL, Crankshaft Oil, Front
	2142125000	1	J, T, U		49	ECN, ED3			
		1	J, T, U		74	ECN, ED3			
14									SEAL, Crankshaft Oil, Rear
	2144325000	1	J, T, U		49	ECN, ED3			
		1	J, T, U		74	ECN, ED3			
15									O RING, Water Inlet Tube
	04884873AA	1	J, T, U		49	ECN, ED3			
		1	J, T, U		74	ECN, ED3			
16		1							O RING, Engine Oil Level Tube, Part # 2661423500, (NOT SERVICED)

COMPASS/PATRIOT (MK)

SERIES	LINE	BODY	ENGINE	TRANSMISSION
H = HIGHLINE L = LOWLINE P = PREMIUM	J = JEEP - 4WD T = JEEP - 2WD	49 = HATCHBACK TYPE #2 74 = SPORT UTILITY 4-DR TYPE #4	ED3 = 2.4L 4 Cyl DOHC 16V Dual VVT Engine	DD7 = 5-Speed Manual T355 Transmission DEF = 6-Speed Manual Aisin BG6 Trans DAV = Continuously Variable Transmission DAW = Cont.Var. w/Off-Rd Crawl Ratio Trans

Engine Covers And Components 2.0L [ECN]
Figure 2.0L-130

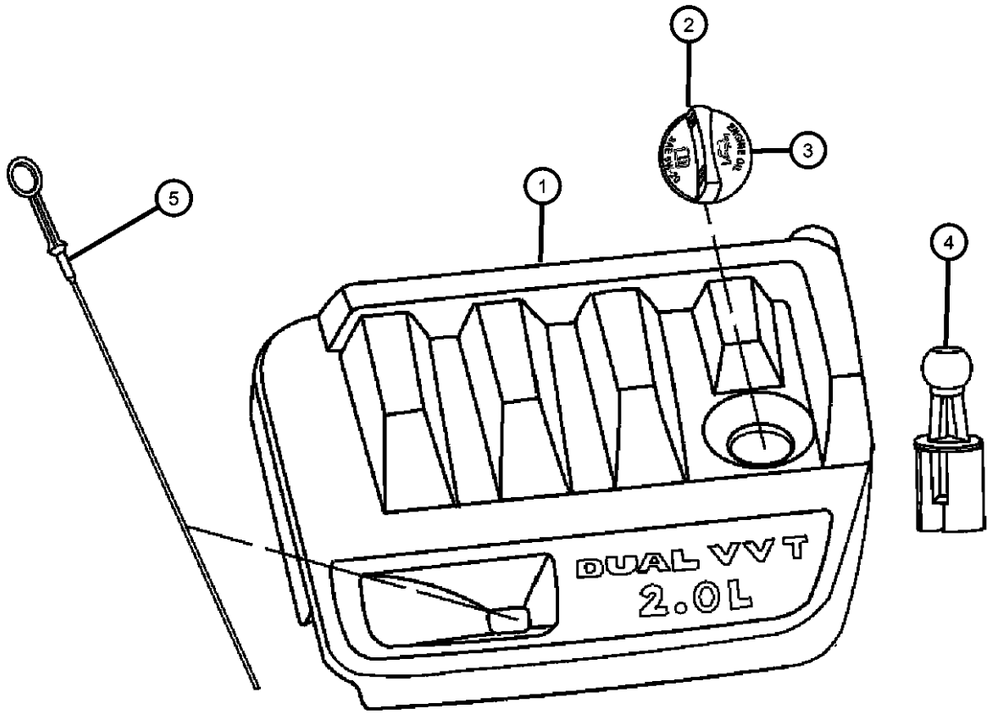

ITEM	PART NUMBER	QTY	LINE	SERIES	BODY	ENGINE	TRANS	TRIM	DESCRIPTION

NOTE:
Sales Codes:
[DAV] = Continuously Variable Transmission
[DEF] = 6-Speed Manual Aisian BG6 Transmission
[DEK] = 6-Speed Manual Getrag DM76 Transmission
[DE0] = All 6-Speed Manual Transmissions
[DD0] = All 5-Speed Manual Transmissions
[DD7] = 5-Speed Manual T355 Transmission
[EBA] = 1.8L 4 Cylinder DOHC 16 Valve VVT Engine
[ECD] = 2.0L 4 Cylinder DOHC Diesel 16 Valve Engine
[ECN] = 2.0L 4 Cylinder DOHC 16 Valve VVT Engine
[EC0] = All 2.0L 4 Cylinder Gas Engines
[ED3] = 2.4L 4 Cylinder DOHC 16 Valve Duel VVT Engine
[ED4] = 2.4L 4 Cylinder DOHC 16 Valve Turbo Engine
[ED0] = All 2.4L 4 Cylinder Gas Engines
[NAA] = Federal Emissions
[NAE] = California Emisssions
[NAS] = 50 State Emissions
[NA1] = Export Emissions

ITEM	PART NUMBER	QTY	LINE	SERIES	BODY	ENGINE	TRANS	TRIM	DESCRIPTION
1									COVER, Engine
	04891715AB	1	J, T, U		49	ECN			
		1	J, T, U		74	ECN			
2									CAP, Oil Filler
	04884739AA	1	J, T, U		49	ECN, ED3			Includes O-ring
		1	J, T, U		74	ECN, ED3			Includes O-ring
3									O RING
	68029299AA	1	J, T, U		49	ECN, ED3			Oil Filler Cap
		1	J, T, U		74	ECN, ED3			Oil Filler Cap
4									BALL STUD
	04891847AA	4	J, T, U		49	ECN, ED3			Engine Cover To Engine, Mounting
		4	J, T, U		74	ECN, ED3			Engine Cover To Engine, Mounting
5									INDICATOR, Engine Oil Level
	04884688AD	1	J, T, U		74	ED3, ECN			
		1	J, T, U		49	ECN, ED3			

COMPASS/PATRIOT (MK)

SERIES	LINE	BODY	ENGINE	TRANSMISSION
H = HIGHLINE L = LOWLINE P = PREMIUM	J = JEEP - 4WD T = JEEP - 2WD	49 = HATCHBACK TYPE #2 74 = SPORT UTILITY 4-DR TYPE #4	ED3 = 2.4L 4 Cyl DOHC 16V Dual VVT Engine	DD7 = 5-Speed Manual T355 Transmission DEF = 6-Speed Manual Aisin BG6 Trans DAV = Continuously Variable Transmission DAW = Cont.Var. w/Off-Rd Crawl Ratio Trans

Cylinder Head Cover And Components 2.0L [ECN]
Figure 2.0L-210

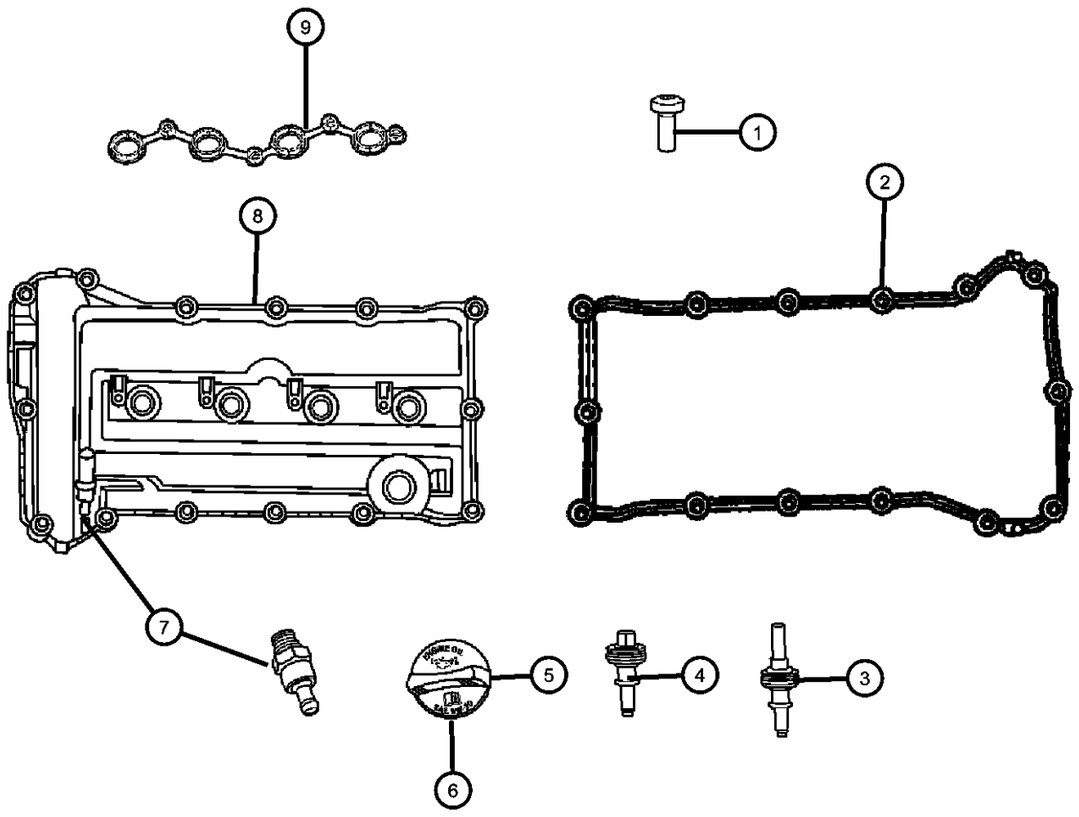

ITEM	PART NUMBER	QTY	LINE	SERIES	BODY	ENGINE	TRANS	TRIM	DESCRIPTION

NOTE:
Sales Codes:
[DAV] = Continuously Variable Transmission
[DEF] = 6-Speed Manual Aisian BG6 Transmission
[DEK] = 6-Speed Manual Getrag DM76 Transmission
[DE0] = All 6-Speed Manual Transmissions
[DD0] = All 5-Speed Manual Transmissions
[DD7] = 5-Speed Manual T355 Transmission
[EBA] = 1.8L 4 Cylinder DOHC 16 Valve VVT Engine
[ECD] = 2.0L 4 Cylinder DOHC Diesel 16 Valve Engine
[ECN] = 2.0L 4 Cylinder DOHC 16 Valve VVT Engine
[EC0] = All 2.0L 4 Cylinder Gas Engines
[ED3] = 2.4L 4 Cylinder DOHC 16 Valve Duel VVT Engine
[ED4] = 2.4L 4 Cylinder DOHC 16 Valve Turbo Engine
[ED0] = All 2.4L 4 Cylinder Gas Engines
[NAA] = Federal Emissions
[NAE] = California Emisssions
[NAS] = 50 State Emissions
[NA1] = Export Emissions

ITEM	PART NUMBER	QTY	LINE	SERIES	BODY	ENGINE	TRANS	TRIM	DESCRIPTION
1	06104141AA	4	J, T, U		49	ECN, ED3			SCREW, [M6X1.0X16.0], Ignition Coil To Cylinder Head Cover, Mounting
2									GASKET, Cylinder Cover
	04884762AA	1	J, T, U		49	ECN, ED3			
		1	J, T, U		74	ECN, ED3			
3									ISOLATOR, Cylinder Head Cover, Grommet And Stud, [M6 X 1.0-6G]
	04884763AA	11	J, T, U		49	ECN, ED3			
		11	J, T, U		74	ECN, ED3			
4									ISOLATOR, Cylinder Head Cover, Grommet And Bolt, [M6 X 1.0-6G]
	04884764AA	7	U, J, T		49	ECN, ED3			
		7	J, T, U		74	ECN, ED3			
5									CAP, Oil Filler
	04884739AA	1	J, T, U		49	ECN, ED3			Includes O-ring
		1	J, T, U		74	ECN, ED3			Includes O-ring
6									O RING
	68029299AA	1	J, T, U		49	ECN, ED3			Oil Filler Cap
		1	J, T, U		74	ECN, ED3			Oil Filler Cap
7									VALVE, PCV

COMPASS/PATRIOT (MK)

SERIES	LINE	BODY	ENGINE	TRANSMISSION
H = HIGHLINE L = LOWLINE P = PREMIUM	J = JEEP - 4WD T = JEEP - 2WD	49 = HATCHBACK TYPE #2 74 = SPORT UTILITY 4-DR TYPE #4	ED3 = 2.4L 4 Cyl DOHC 16V Dual VVT Engine	DD7 = 5-Speed Manual T355 Transmission DEF = 6-Speed Manual Aisin BG6 Trans DAV = Continuously Variable Transmission DAW = Cont.Var. w/Off-Rd Crawl Ratio Trans

AR = use ase required - = Non illustrrated part

Cylinder Head Cover And Components 2.0L [ECN]
Figure 2.0L-210

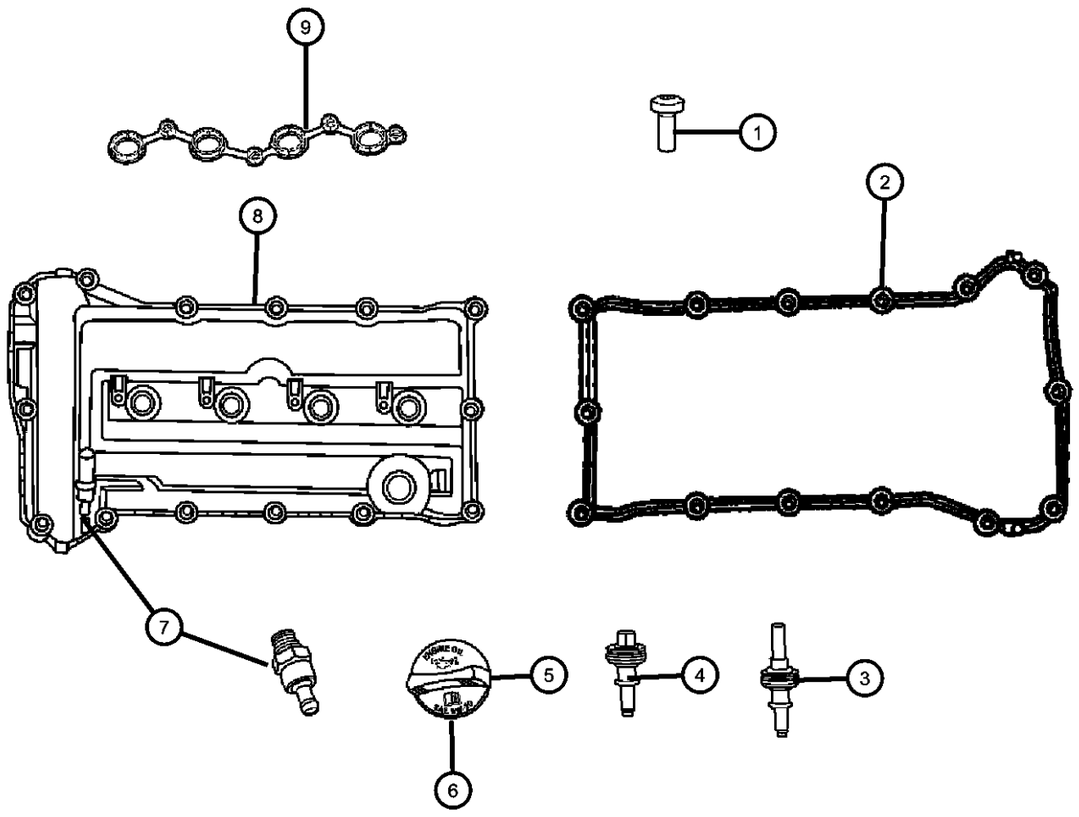

ITEM	PART NUMBER	QTY	LINE	SERIES	BODY	ENGINE	TRANS	TRIM	DESCRIPTION
	05047002AA	1	J, T, U		74	ECN, ED3			15mm Nipple
		1	J, T, U		49	ECN, ED3			15mm Nipple
8									COVER, Cylinder Head
	04884760AE	1	J, T, U		74	ECN, ED3			
		1	J, T, U		49	ECN, ED3			
9									GASKET, Coil
	04884765AA	1	J, T, U		49	ECN, ED3			
		1	J, T, U		74	ECN, ED3			

COMPASS/PATRIOT (MK)

SERIES	LINE	BODY	ENGINE	TRANSMISSION
H = HIGHLINE L = LOWLINE P = PREMIUM	J = JEEP - 4WD T = JEEP - 2WD	49 = HATCHBACK TYPE #2 74 = SPORT UTILITY 4-DR TYPE #4	ED3 = 2.4L 4 Cyl DOHC 16V Dual VVT Engine	DD7 = 5-Speed Manual T355 Transmission DEF = 6-Speed Manual Aisin BG6 Trans DAV = Continuously Variable Transmission DAW = Cont.Var. w/Off-Rd Crawl Ratio Trans

AR = use ase required - = Non illustrrated part

Cylinder Head And Components 2.0L [ECN]
Figure 2.0L-220

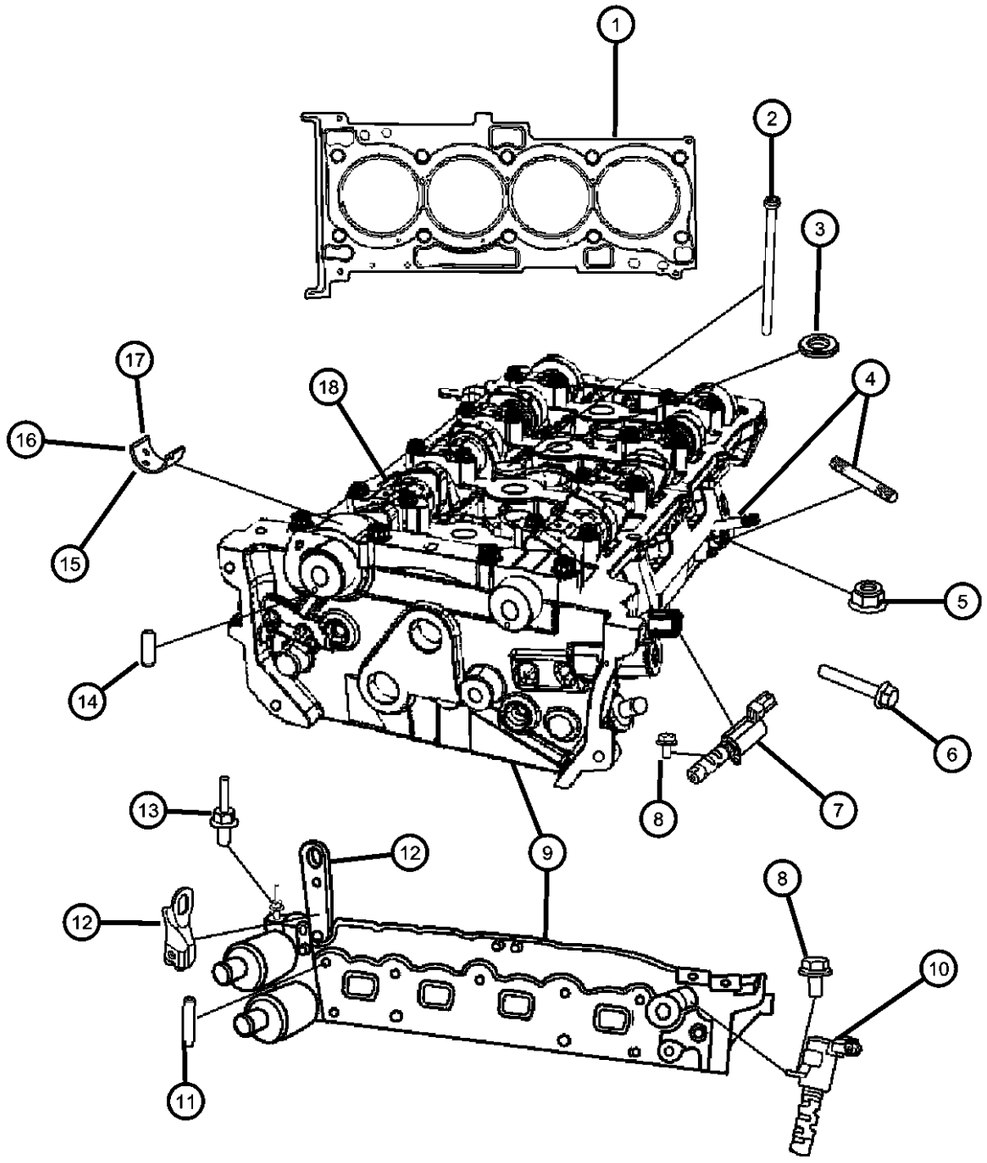

ITEM	PART NUMBER	QTY	LINE	SERIES	BODY	ENGINE	TRANS	TRIM	DESCRIPTION

NOTE:
Complete Cylinder Contains: Cylinder Head, Camshafts, Camshaft Bearings, Intake Valves, Exhaust Valves, Valve Stem Seals, Valve Retainers, V
Sales Codes:
[DAV] = Continuously Variable Transmission
[DEF] = 6-Speed Manual Aisian BG6 Transmission
[DEK] = 6-Speed Manual Getrag DM76 Transmission
[DE0] = All 6-Speed Manual Transmissions
[DD0] = All 5-Speed Manual Transmissions
[DD7] = 5-Speed Manual T355 Transmission
[EBA] = 1.8L 4 Cylinder DOHC 16 Valve VVT Engine
[ECD] = 2.0L 4 Cylinder DOHC Diesel 16 Valve Engine
[ECN] = 2.0L 4 Cylinder DOHC 16 Valve VVT Engine
[EC0] = All 2.0L 4 Cylinder Gas Engines
[ED3] = 2.4L 4 Cylinder DOHC 16 Valve Duel VVT Engine
[ED4] = 2.4L 4 Cylinder DOHC 16 Valve Turbo Engine
[ED0] = All 2.4L 4 Cylinder Gas Engines
[NAA] = Federal Emissions
[NAE] = California Emisssions
[NAS] = 50 State Emissions
[NA1] = Export Emissions

ITEM	PART NUMBER	QTY	LINE	SERIES	BODY	ENGINE	TRANS	TRIM	DESCRIPTION
1									GASKET PACKAGE, Cylinder Head, See ILL 110 For Contents
	05189975AA	1	J, T, U		49	ECN			
		1	J, T, U		74	ECN			
2									BOLT, [M11X1.50X165.70]
	06508858AA	8	J, T, U		49	ECN, ED3			Cylinder Head To Engine Block, Mounting
		8	J, T, U		74	ECN, ED3			Cylinder Head To Engine Block, Mounting
3									WASHER, Flat Special, ID M11.50 OD 23.20 THK 3.40
	06508859AA	2	J, T, U		49	ECN, ED3			Cylinder Head To Engine Block, Mounting
		2	J, T, U		74	ECN, ED3			Cylinder Head To Engine Block, Mounting
4	06102397AA	2				ECN			STUD, Double Ended, [M8X1.25X55.00], Intake Manifold To Cylinder Head, Mounting
5	06104716AA	3							NUT, [M8X1.25]Mounting
6									BOLT, [M8X1.25X45.0]
	06104201AA	3	J, T, U		49	ECN, ED3			Intake Manifold To Cylinder Head, Mounting
		3	J, T, U		74	ECN, ED3			Intake Manifold To Cylinder Head, Mounting

COMPASS/PATRIOT (MK)

SERIES	LINE	BODY	ENGINE	TRANSMISSION
H = HIGHLINE L = LOWLINE P = PREMIUM	J = JEEP - 4WD T = JEEP - 2WD	49 = HATCHBACK TYPE #2 74 = SPORT UTILITY 4-DR TYPE #4	ED3 = 2.4L 4 Cyl DOHC 16V Dual VVT Engine	DD7 = 5-Speed Manual T355 Transmission DEF = 6-Speed Manual Aisin BG6 Trans DAV = Continuously Variable Transmission DAW = Cont.Var. w/Off-Rd Crawl Ratio Trans

Cylinder Head And Components 2.0L [ECN]
Figure 2.0L-220

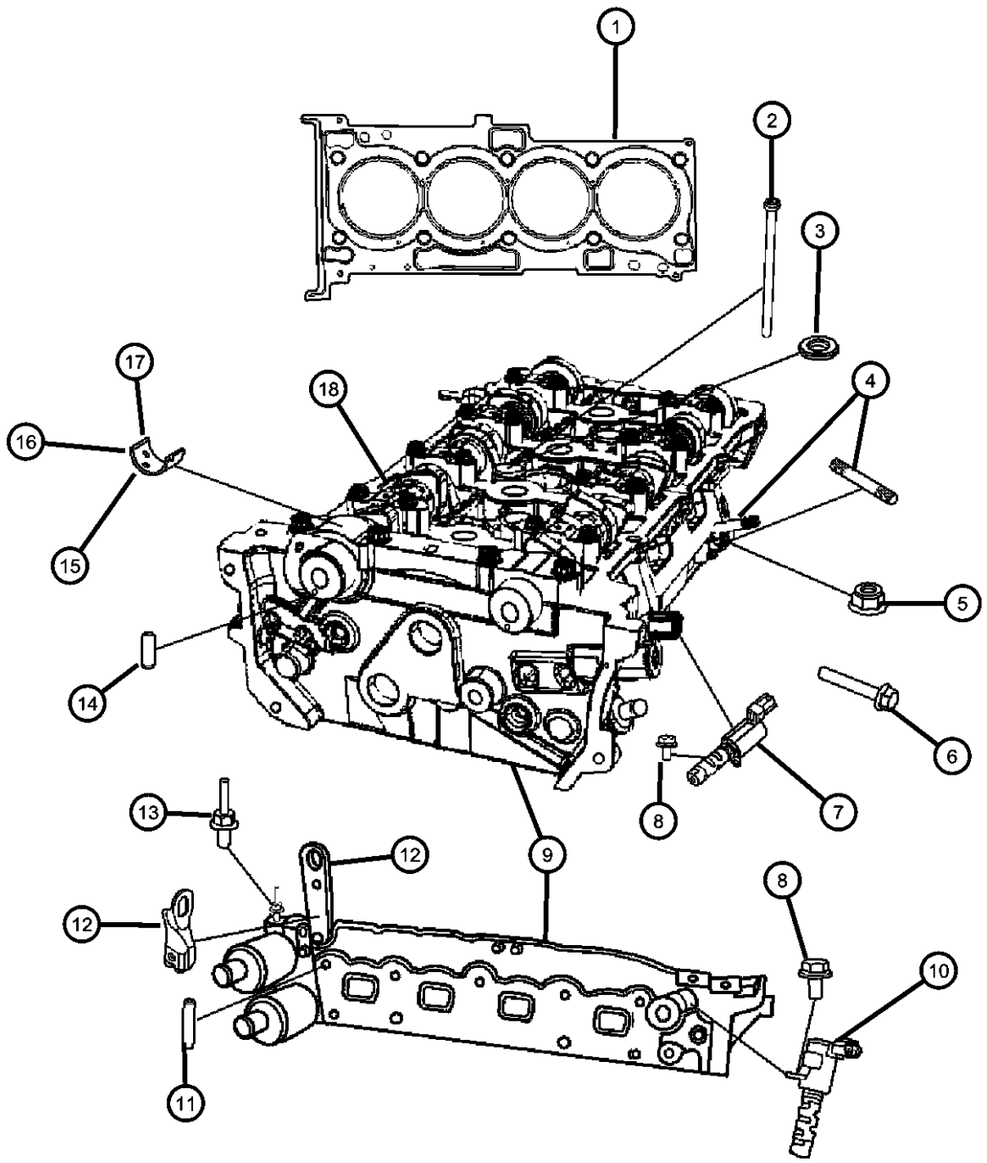

ITEM	PART NUMBER	QTY	LINE	SERIES	BODY	ENGINE	TRANS	TRIM	DESCRIPTION
7									CONTROL VALVE, Oil Intake
	04884695AA	1	J, T, U		49	ECN, ED3			
		1	J, T, U		74	ECN, ED3			
8	1140306123	2				ECN			BOLT, [M6X12], Oil Control Valve To Cylinder Head, Mounting
9	68004168AA	1	J, T, U			ECN			HEAD PACKAGE, Engine Cylinder, See Note
10									CONTROL VALVE, Oil Exhaust
	04884483AA	1	J, T, U		49	ED3, ECN			
		1	J, T, U		74	ECN, ED3			
11	2212538100	2				ECN			STUD, Exhaust Manifold To Cylinder Head, Mounting
12									BRACKET, Engine Lift
	04884752AC	1	J, T, U		49	ECN, ED3			Rear
		1	J, T, U		74	ECN, ED3			Rear
13									STUD, Double Ended, M8x1.25x50.00
	06508424AA	1	J, T, U		49	ECN, ED3			Rear Lift Hook To Cylinder Head, Mounting
		1	J, T, U		74	ECN, ED3			Rear Lift Hook To Cylinder Head, Mounting
14		1							PIN, Dowel, Serviced With Camshaft, (NOT SERVICED),
15	1016A032	AR				ECN			BEARING, Camshaft, Size 1
16	1016A031	AR				ECN			BEARING, Camshaft, Size 2
17	1016A030	AR				ECN			BEARING, Camshaft, Size 3
18	1601110000	7				ECN, ED3			BALL

COMPASS/PATRIOT (MK)

SERIES	LINE	BODY	ENGINE	TRANSMISSION
H = HIGHLINE L = LOWLINE P = PREMIUM	J = JEEP - 4WD T = JEEP - 2WD	49 = HATCHBACK TYPE #2 74 = SPORT UTILITY 4-DR TYPE #4	ED3 = 2.4L 4 Cyl DOHC 16V Dual VVT Engine	DD7 = 5-Speed Manual T355 Transmission DEF = 6-Speed Manual Aisin BG6 Trans DAV = Continuously Variable Transmission DAW = Cont.Var. w/Off-Rd Crawl Ratio Trans

AR = use ase required - = Non illustrrated part

Engine Block And Components 2.0L [ECN]
Figure 2.0L-310

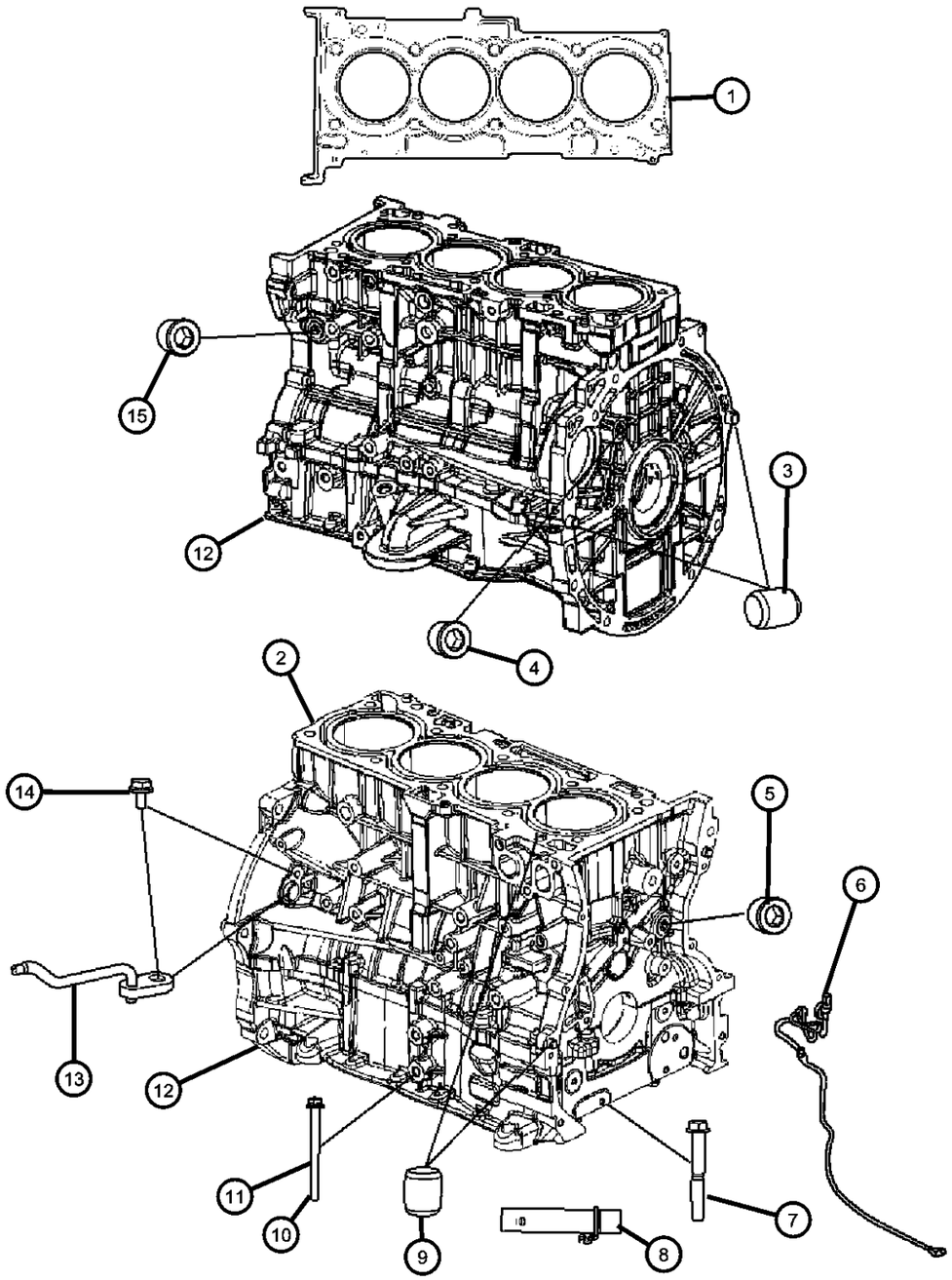

ITEM	PART NUMBER	QTY	LINE	SERIES	BODY	ENGINE	TRANS	TRIM	DESCRIPTION

NOTE:
The Following Parts Must Be Replaced When Ordering A Replacement Long Block:
Flex Plate To Clutch Bolts, Flex Plate To Crankshaft Bolts, Catalytic Converter Gasket, Intake And Exhaust Manifold Gaskets, Thermostat Housing
Water Pump Pipe O-Ring, Throttle Body Gasket.
The Following Parts Must Be Replaced When Ordering A Replacement Short Block:
Upper Engine Gasket Package, Flex Plate To Clutch Bolts, Flex Plate To Crankshaft Bolts, Catalytic Converter Gasket, Thermostat Housing “D“ Ri
The Engine Identifaction Label Contains: The Production Assembly Part Number And Displacement. It Is Located On The Valve Cover In The Rear
Long Block Contains: Complete Cylinder Head, [Intake Valves, Exhaust Valves, Valve Seals, Valve Retainers, Valve Springs, Camshafts, Camsha
Short Block Contains: Crankshaft, Pistons, Connecting Rods, Piston Rings, Crankshaft Bearings, Connecting Rod Bearings, Bedplate, Balance S
Sales Codes:
[DAV] = Continuously Variable Transmission
[DEF] = 6-Speed Manual Aisian BG6 Transmission
[DEK] = 6-Speed Manual Getrag DM76 Transmission
[DE0] = All 6-Speed Manual Transmissions
[DD0] = All 5-Speed Manual Transmissions
[DD7] = 5-Speed Manual T355 Transmission
[EBA] = 1.8L 4 Cylinder DOHC 16 Valve VVT Engine
[ECD] = 2.0L 4 Cylinder DOHC Diesel 16 Valve Engine
[ECN] = 2.0L 4 Cylinder DOHC 16 Valve VVT Engine
[EC0] = All 2.0L 4 Cylinder Gas Engines
[ED3] = 2.4L 4 Cylinder DOHC 16 Valve Duel VVT Engine
[ED4] = 2.4L 4 Cylinder DOHC 16 Valve Turbo Engine
[ED0] = All 2.4L 4 Cylinder Gas Engines
[NAA] = Federal Emissions
[NAE] = California Emisssions
[NAS] = 50 State Emissions
[NA1] = Export Emissions

ITEM	PART NUMBER	QTY	LINE	SERIES	BODY	ENGINE	TRANS	TRIM	DESCRIPTION
1	1601110000	7							GASKET, Cylinder Head, Serviced In Package, See Ill 120, (NOT SERVICED)
2									ENGINE, Short Block, See Note
	05183905AA	1	J, T, U		49	ECN			
		1	J, T, U		74	ECN			
3									DOWEL PIN
	04884783AA	2	J, T, U		49	ECN			
		2	J, T, U		74	ECN			
4									PLUG
	04884701AA	2	J, T, U		74	ECN			Main Oil Gallery
		2	J, T, U		49	ECN			Main Oil Gallery
5	04884701AA	1	J, T, U		49	ECN			PLUG, Oil Feed To Tensioner
6	05033279AA	1				ECN, ED3			CORD, Engine Block Heater

COMPASS/PATRIOT (MK)

SERIES	LINE	BODY	ENGINE	TRANSMISSION
H = HIGHLINE L = LOWLINE P = PREMIUM	J = JEEP - 4WD T = JEEP - 2WD	49 = HATCHBACK TYPE #2 74 = SPORT UTILITY 4-DR TYPE #4	ED3 = 2.4L 4 Cyl DOHC 16V Dual VVT Engine	DD7 = 5-Speed Manual T355 Transmission DEF = 6-Speed Manual Aisin BG6 Trans DAV = Continuously Variable Transmission DAW = Cont.Var. w/Off-Rd Crawl Ratio Trans

Engine Block And Components 2.0L [ECN]
Figure 2.0L-310

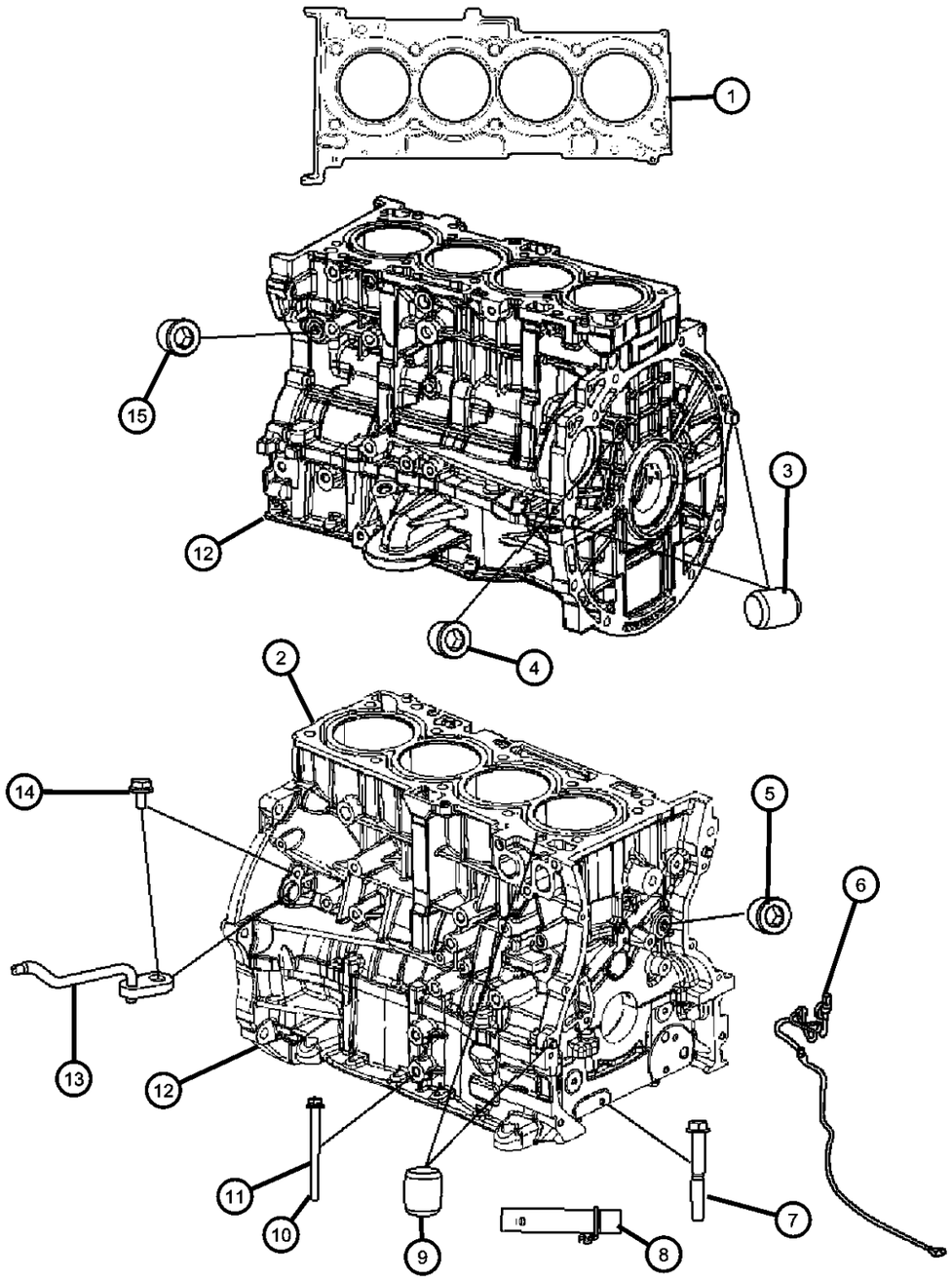

ITEM	PART NUMBER	QTY	LINE	SERIES	BODY	ENGINE	TRANS	TRIM	DESCRIPTION
7	MN163822	10				ECN			BOLT, [M10X1.25X76], Main Bearing Cap To Cylinder Block, Mounting
8									HEATER, Engine
	05033557AB	1	J, T, U		49	ECN, ED3			
		1	J, T, U		74	ECN, ED3			
9									DOWEL PIN
	04884905AA	2	J, T, U		49	ECN			Cylinder Block To Ladder Frame, Mounting
		2	J, T, U		74	ECN			Cylinder Block To Ladder Frame, Mounting
		2	J, T, U		49	ECN			Cylinder Block To Cylinder Head, Mounting
		2	J, T, U		74	ECN			Cylinder Block To Cylinder Head, Mounting
		2	J, T, U		49	ECN			Chain Case Cover To Cylinder Block, Mounting
		2	J, T, U		74	ECN			Chain Case Cover To Cylinder Block, Mounting
10	2434825000	2	J, T, U		49	ECN, ED3			BOLT, [M8X1.25X55], Ladder Frame To Cylinder Block, Mounting
11									BOLT, [M8X1.25X103]
	04884907AA	6				ECN			Ladder Frame To Engine Block, Mounting
		2				ECN			Oil Pan To Ladder Frame, Mounting
12		2							BEDPLATE, Serviced With Shortblock Only, (NOT SERVICED),
13									INJECTOR, Oil
	04884767AA	1	J, T, U		49	ECN, ED3			
		1	J, T, U		74	ECN, ED3			
14									BOLT, [M6X12]
	1140306123	1	J, T, U		49	ECN, ED3			Oil Injector To Engine Block, Mounting
		1	J, T, U		74	ECN, ED3			Oil Injector To Engine Block, Mounting
15									PLUG, Cylinder Block, [M14 X 1.5]
	04884782AA	1	J, T, U		49	ECN, ED3			Engine Block Water Jacket Drain
		1	J, T, U		74	ECN, ED3			Engine Block Water Jacket Drain

COMPASS/PATRIOT (MK)

SERIES	LINE	BODY	ENGINE	TRANSMISSION
H = HIGHLINE L = LOWLINE P = PREMIUM	J = JEEP - 4WD T = JEEP - 2WD	49 = HATCHBACK TYPE #2 74 = SPORT UTILITY 4-DR TYPE #4	ED3 = 2.4L 4 Cyl DOHC 16V Dual VVT Engine	DD7 = 5-Speed Manual T355 Transmission DEF = 6-Speed Manual Aisin BG6 Trans DAV = Continuously Variable Transmission DAW = Cont.Var. w/Off-Rd Crawl Ratio Trans

AR = use ase required - = Non illustrrated part

Crankshaft Pistons And Driveplate 2.0L [ECN]
Figure 2.0L-410

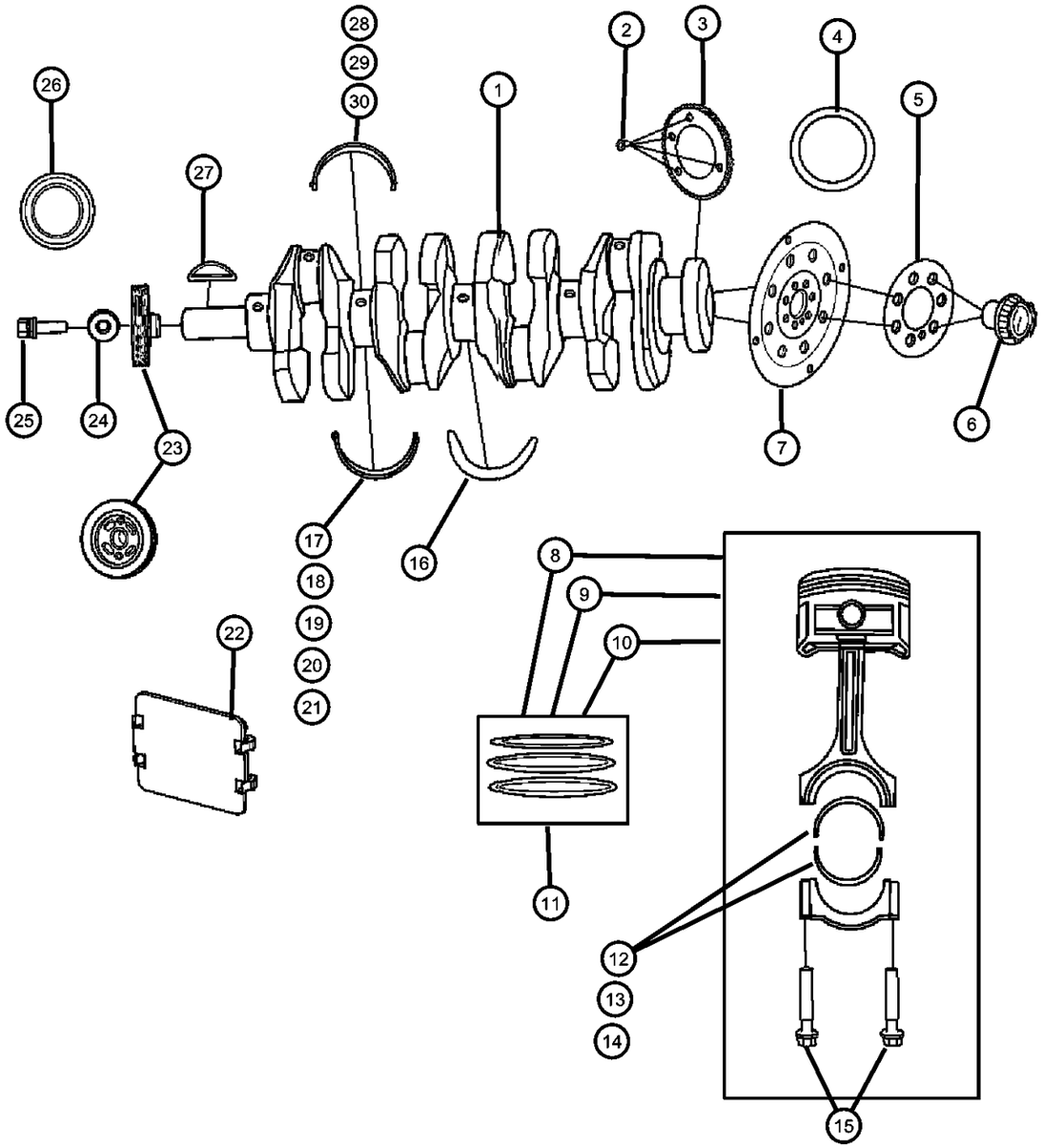

ITEM	PART NUMBER	QTY	LINE	SERIES	BODY	ENGINE	TRANS	TRIM	DESCRIPTION

NOTE:
Torque Converters Are Not Serviced Seperate From Transaxle On MK Vechiles.
Sales Codes:
[DAV] = Continuously Variable Transmission
[DEF] = 6-Speed Manual Aisian BG6 Transmission
[DEK] = 6-Speed Manual Getrag DM76 Transmission
[DE0] = All 6-Speed Manual Transmissions
[DD0] = All 5-Speed Manual Transmissions
[DD7] = 5-Speed Manual T355 Transmission
[EBA] = 1.8L 4 Cylinder DOHC 16 Valve VVT Engine
[ECD] = 2.0L 4 Cylinder DOHC Diesel 16 Valve Engine
[ECN] = 2.0L 4 Cylinder DOHC 16 Valve VVT Engine
[EC0] = All 2.0L 4 Cylinder Gas Engines
[ED3] = 2.4L 4 Cylinder DOHC 16 Valve Duel VVT Engine
[ED4] = 2.4L 4 Cylinder DOHC 16 Valve Turbo Engine
[ED0] = All 2.4L 4 Cylinder Gas Engines
[NAA] = Federal Emissions
[NAE] = California Emisssions
[NAS] = 50 State Emissions
[NA1] = Export Emissions

ITEM	PART NUMBER	QTY	LINE	SERIES	BODY	ENGINE	TRANS	TRIM	DESCRIPTION
1									CRANKSHAFT PACKAGE, Engine
	68001693AA	1	J, T, U		49	ECN			
		1	J, T, U		74	ECN			
2	3919137100	4				ECN			BOLT, [M6X1.0X14], Reluctor Wheel To Crankshaft, Mounting
3									RELUCTOR WHEEL, Crankshaft
	3919025000	1	J, T, U		49	ED3, ECN			
		1	J, T, U		74	ECN, ED3			
4									SEAL, Crankshaft Oil, Rear
	2144325000	1	J, T, U		49	ECN, ED3			
		1	J, T, U		74	ECN, ED3			
5	04736477AA	1					DAV, DD7		BACKING PLATE
6	05189932AA	1				ECN			BOLT PACKAGE, Driveplate To Crankshaft, [M12 X 1.25]
7	04736238AA	1					DAV, DAW		FLEXPLATE
8									PISTON PIN AND ROD, A-Size
	05191337AA	AR	J, T, U		49	ECN			
		AR	J, T, U		74	ECN			
9									PISTON PIN AND ROD, B-Size
	05191338AA	AR	J, T, U		74	ECN			

COMPASS/PATRIOT (MK)

SERIES	LINE	BODY	ENGINE	TRANSMISSION
H = HIGHLINE L = LOWLINE P = PREMIUM	J = JEEP - 4WD T = JEEP - 2WD	49 = HATCHBACK TYPE #2 74 = SPORT UTILITY 4-DR TYPE #4	ED3 = 2.4L 4 Cyl DOHC 16V Dual VVT Engine	DD7 = 5-Speed Manual T355 Transmission DEF = 6-Speed Manual Aisin BG6 Trans DAV = Continuously Variable Transmission DAW = Cont.Var. w/Off-Rd Crawl Ratio Trans

AR = use ase required - = Non illustrrated part

Crankshaft Pistons And Driveplate 2.0L [ECN]
Figure 2.0L-410

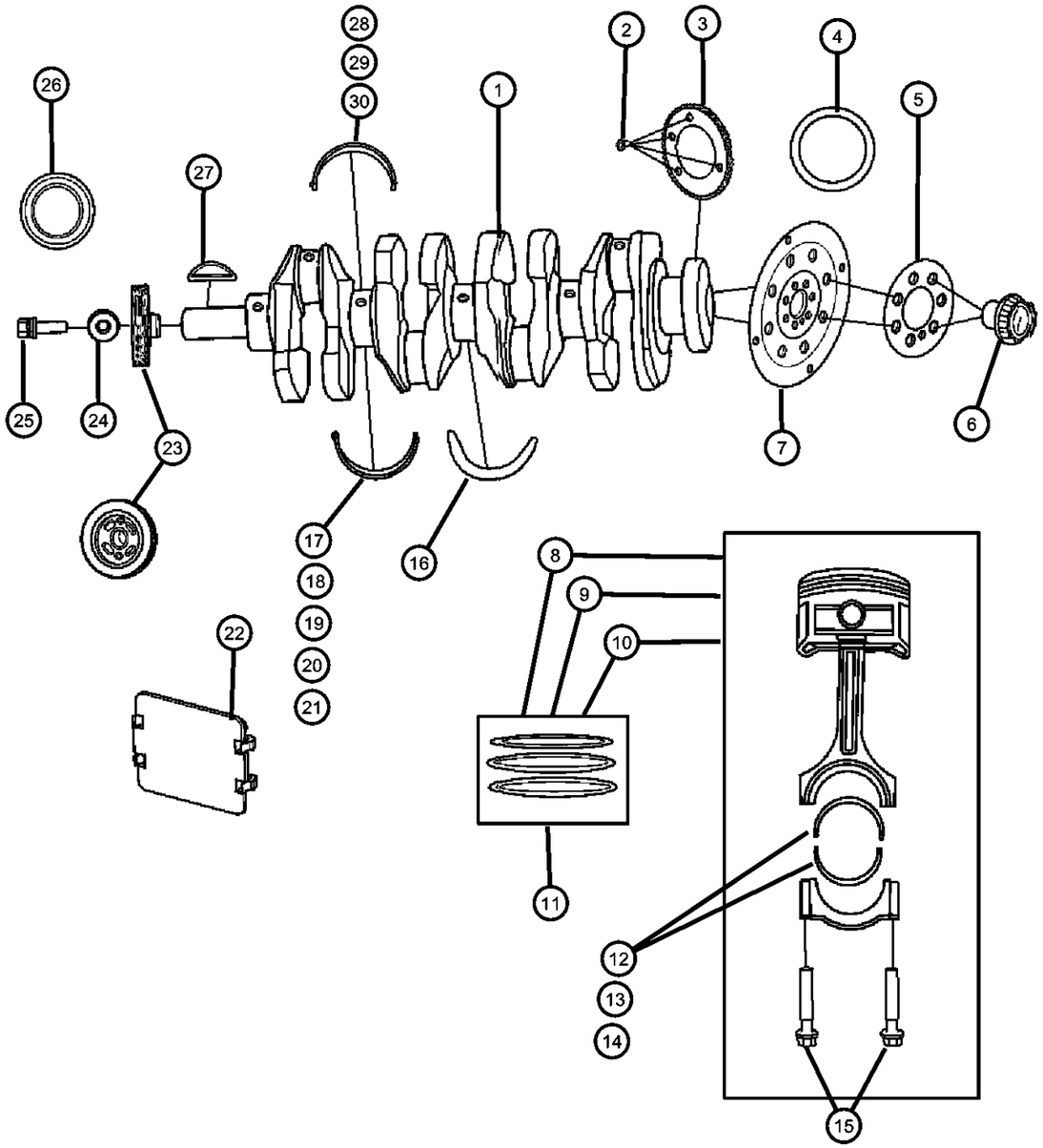

ITEM	PART NUMBER	QTY	LINE	SERIES	BODY	ENGINE	TRANS	TRIM	DESCRIPTION
		AR	J, T, U		49	ECN			
10									PISTON PIN AND ROD, C-Size
	05191339AA	AR	J, T, U		49	ECN			
		AR	J, T, U		74	ECN			
11									PISTON RING SET, COMPLETE ENGINE, STD.
	05191418AB	AR	J, T, U		49	ECN			
		AR	J, T, U		74	ECN			
12	1115A150	AR				ECN			BEARING, Connecting Rod, STD.
13	1115A149	AR				ECN			BEARING, Connecting Rod, -3 Micron
14	1115A151	AR				ECN			BEARING, Connecting Rod, +3 Micron
15									BOLT, Connecting Rod, [M8 X 1.25]
	MN195112	8	J, T, U		49	ECN			Connecting Rod To Cap, Mounting
		8	J, T, U		74	ECN			Connecting Rod To Cap, Mounting
16									BEARING, Crankshaft Thrust
	04884910AA	2	J, T, U		49	ECN, ED3			Used On vechiles Built On 6-21-2006 And After
		2	J, T, U		74	ECN, ED3			Used On vechiles Built On 6-21-2006 And After
	MN176556	2				ECN			Used On Vechiles Built Up To And Including 6-20-2006
17	1052A540	AR				ECN			BEARING, Crankshaft Lower, Standard
18	1052A539	AR				ECN			BEARING, Crankshaft Lower, -3 Micron
19	1052A541	AR				ECN			BEARING, Crankshaft Lower, +3 Micron
20	1052A538	AR				ECN			BEARING, Crankshaft Lower, -6 Micron
21	1052A542	AR				ECN			BEARING, Crankshaft Lower, +6 Micron
22									COVER
	04884904AA	1	J, T, U		49	ECN, ED3			
		1	J, T, U		74	ECN, ED3			
23									DAMPER, Crankshaft

COMPASS/PATRIOT (MK)

SERIES	LINE	BODY	ENGINE	TRANSMISSION
H = HIGHLINE L = LOWLINE P = PREMIUM	J = JEEP - 4WD T = JEEP - 2WD	49 = HATCHBACK TYPE #2 74 = SPORT UTILITY 4-DR TYPE #4	ED3 = 2.4L 4 Cyl DOHC 16V Dual VVT Engine	DD7 = 5-Speed Manual T355 Transmission DEF = 6-Speed Manual Aisin BG6 Trans DAV = Continuously Variable Transmission DAW = Cont.Var. w/Off-Rd Crawl Ratio Trans

AR = use ase required - = Non illustrrated part

Crankshaft Pistons And Driveplate 2.0L [ECN]
Figure 2.0L-410

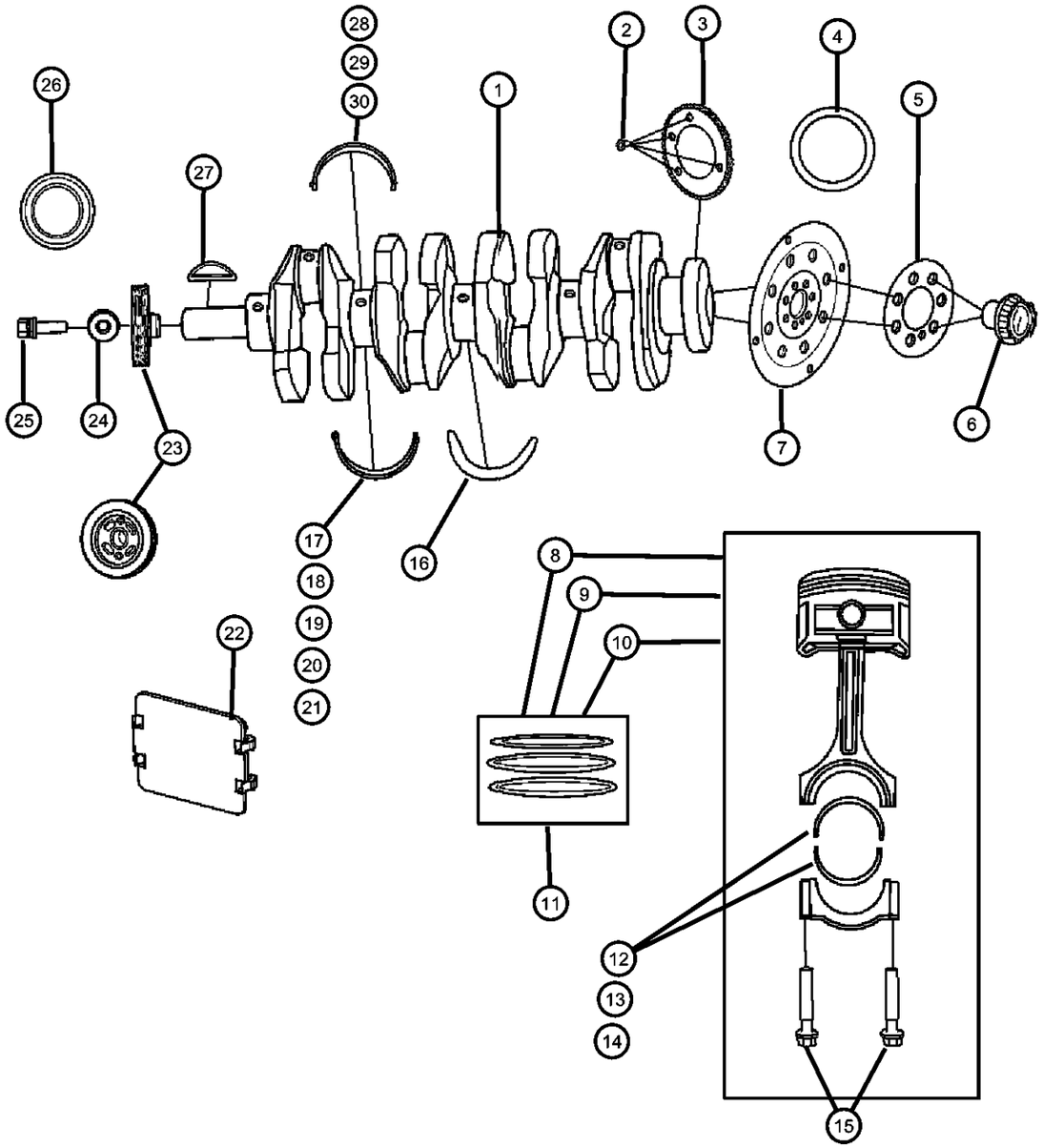

ITEM	PART NUMBER	QTY	LINE	SERIES	BODY	ENGINE	TRANS	TRIM	DESCRIPTION
	2312425000	1	J, T, U		49	ECN, ED3			
		1	J, T, U		74	ECN, ED3			
24									WASHER
	04884877AB	1	J, T, U		49	ED3, ECN			Dampner Pulley To Crankshaft, Mounting
		1	J, T, U		74	ECN, ED3			Dampner Pulley To Crankshaft, Mounting
25	1101A022	1				ECN			BOLT, [M14X1.5X62], Dampner To Crankshaft, Mounting
26									SEAL, Crankshaft Oil, Front
	2142125000	1	J, T, U		49	ECN, ED3			
		1	J, T, U		74	ECN, ED3			
27									KEY, Crankshaft Sprocket
	04884923AB	1	J, T, U		49	ECN, ED3			
		1	J, T, U		74	ECN, ED3			
28	1052A536	AR				ECN			BEARING, Crankshaft Upper, Standard
29	1052A535	AR				ECN			BEARING, Crankshaft Upper, -6 Micron
30	1052A537	AR				ECN			BEARING, Crankshaft Upper, +6 Micron

COMPASS/PATRIOT (MK)

SERIES	LINE	BODY	ENGINE	TRANSMISSION
H = HIGHLINE L = LOWLINE P = PREMIUM	J = JEEP - 4WD T = JEEP - 2WD	49 = HATCHBACK TYPE #2 74 = SPORT UTILITY 4-DR TYPE #4	ED3 = 2.4L 4 Cyl DOHC 16V Dual VVT Engine	DD7 = 5-Speed Manual T355 Transmission DEF = 6-Speed Manual Aisin BG6 Trans DAV = Continuously Variable Transmission DAW = Cont.Var. w/Off-Rd Crawl Ratio Trans

AR = use ase required - = Non illustrrated part

Camshafts And Valves 2.0L [ECN]
Figure 2.0L-510

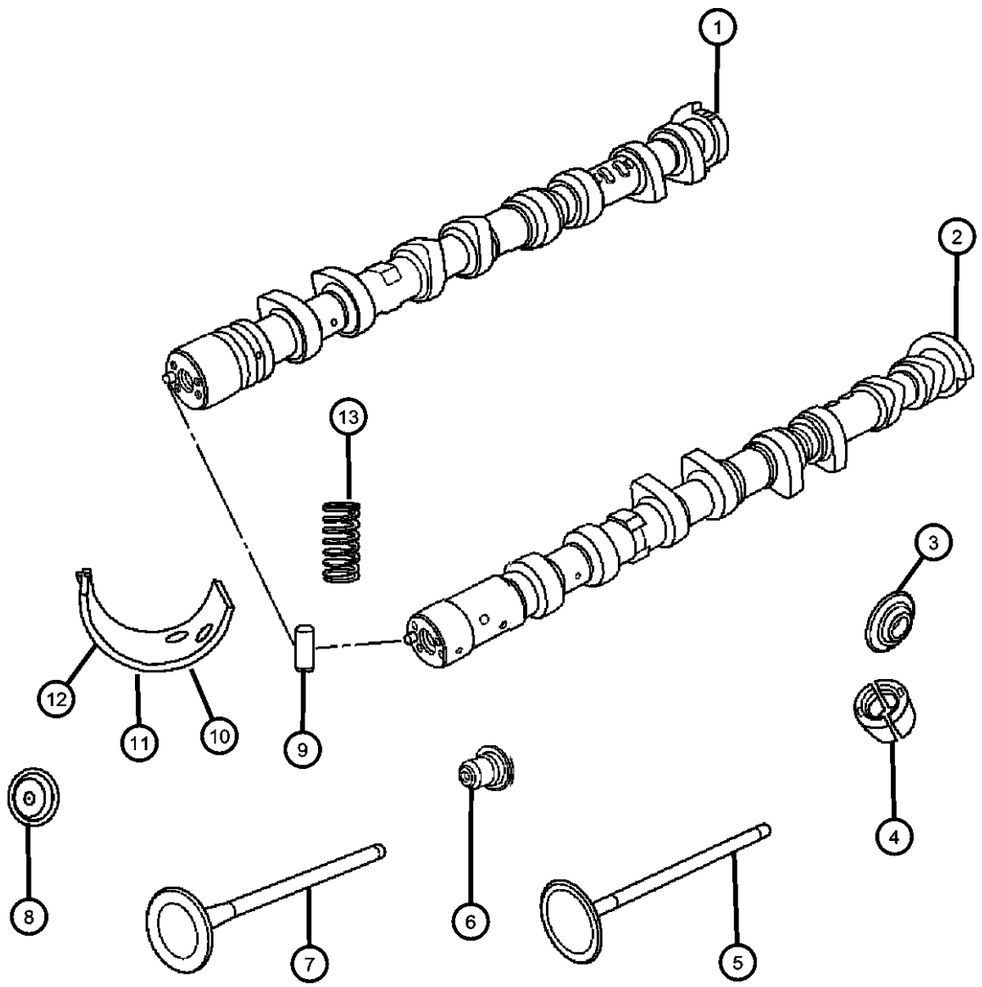

ITEM	PART NUMBER	QTY	LINE	SERIES	BODY	ENGINE	TRANS	TRIM	DESCRIPTION

NOTE:
Solid Bucket Tappets Thickness Is Stamped On Inside Of Bucket.
Sales Codes:
[DAV] = Continuously Variable Transmission
[DEF] = 6-Speed Manual Aisian BG6 Transmission
[DEK] = 6-Speed Manual Getrag DM76 Transmission
[DE0] = All 6-Speed Manual Transmissions
[DD0] = All 5-Speed Manual Transmissions
[DD7] = 5-Speed Manual T355 Transmission
[EBA] = 1.8L 4 Cylinder DOHC 16 Valve VVT Engine
[ECD] = 2.0L 4 Cylinder DOHC Diesel 16 Valve Engine
[ECN] = 2.0L 4 Cylinder DOHC 16 Valve VVT Engine
[EC0] = All 2.0L 4 Cylinder Gas Engines
[ED3] = 2.4L 4 Cylinder DOHC 16 Valve Duel VVT Engine
[ED4] = 2.4L 4 Cylinder DOHC 16 Valve Turbo Engine
[ED0] = All 2.4L 4 Cylinder Gas Engines
[NAA] = Federal Emissions
[NAE] = California Emisssions
[NAS] = 50 State Emissions
[NA1] = Export Emissions

1	04884736AB	1				ECN			CAMSHAFT, Exhaust
2	04884735AB	1				ECN			CAMSHAFT, Intake
3	04884725AA	16				ECN			RETAINER, Valve Spring
4	04884726AA	32				ECN			LOCK, Valve Spring Retainer
5	MN187696	8				ECN			VALVE, Engine Intake
6	2222425000	16				ECN			SEAL, Valve Guide
7	MN183950	8				ECN			VALVE, Engine Exhaust
8									TAPPET, Valve, See Note
	04884594AB	AR				ECN			3.015 Millimeters
	04884594AE	AR				ECN			3.06 Millimeters
	04884594AH	AR				ECN			3.105 Millimeters
	04884594AK	AR				ECN			3.15 Millimeters
	04884594AN	AR				ECN			3.195 Millimeters
	04884594AQ	AR				ECN			3.24 Millimeters
	04884594AT	AR				ECN			3.285 Millimeters
	04884594AW	AR				ECN			3.33 Millimeters
	04884594AZ	AR				ECN			3.375 Millimeters
	04884594BC	AR				ECN			3.42 Millimeters
	04884594BF	AR				ECN			3.465 Millimeters

COMPASS/PATRIOT (MK)

SERIES	LINE	BODY	ENGINE	TRANSMISSION
H = HIGHLINE L = LOWLINE P = PREMIUM	J = JEEP - 4WD T = JEEP - 2WD	49 = HATCHBACK TYPE #2 74 = SPORT UTILITY 4-DR TYPE #4	ED3 = 2.4L 4 Cyl DOHC 16V Dual VVT Engine	DD7 = 5-Speed Manual T355 Transmission DEF = 6-Speed Manual Aisin BG6 Trans DAV = Continuously Variable Transmission DAW = Cont.Var. w/Off-Rd Crawl Ratio Trans

Camshafts And Valves 2.0L [ECN]
Figure 2.0L-510

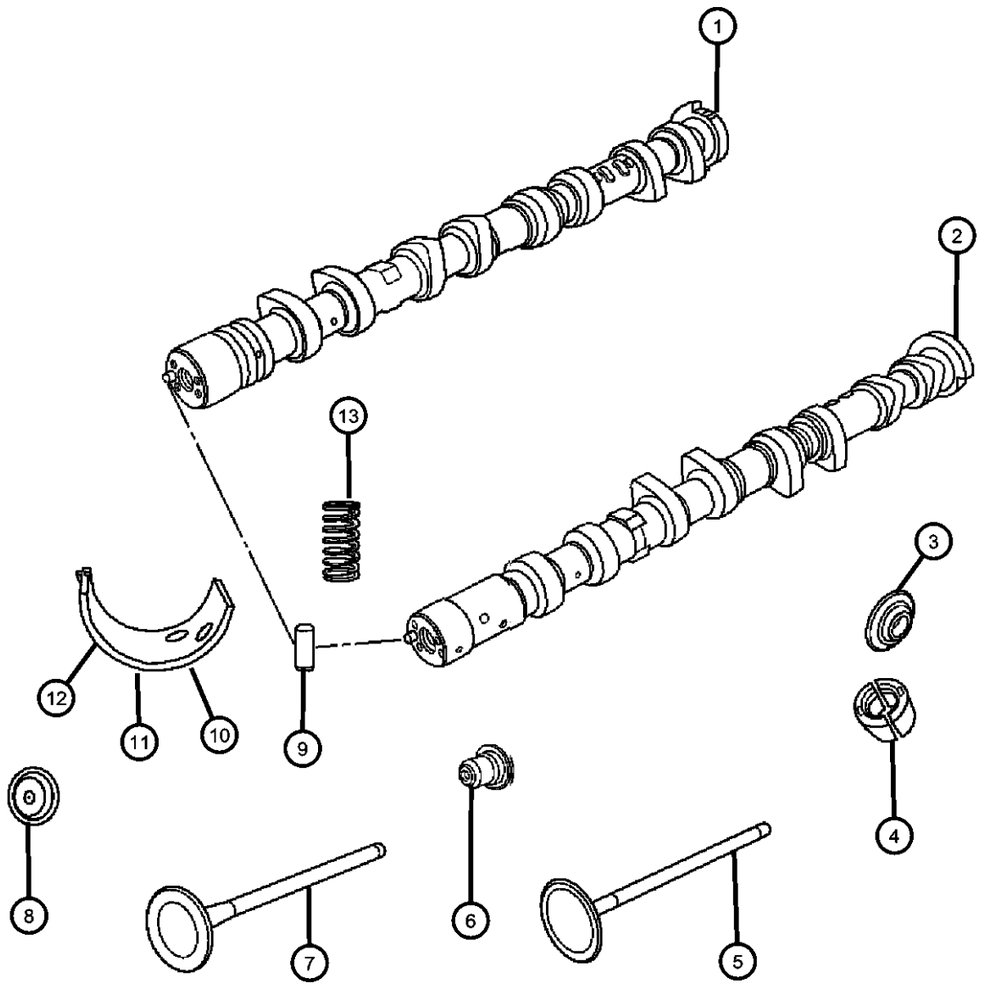

ITEM	PART NUMBER	QTY	LINE	SERIES	BODY	ENGINE	TRANS	TRIM	DESCRIPTION
	04884594BI	AR				ECN			3.51 Millimeters
	04884594BL	AR				ECN			3.555 Millimeters
	04884594BO	AR				ECN			3.600 Millimeters
	04884594BR	AR				ECN			3.645 Millimeters
	04884594BU	AR				ECN			3.690 Millimeters
9	04884594BU	AR							PIN, Dowel, Serviced With Items 1 And 2, (NOT SERVICED),
10	1016A032	AR				ECN			BEARING, Camshaft, Size 1
11	1016A031	AR				ECN			BEARING, Camshaft, Size 2
12	1016A030	AR				ECN			BEARING, Camshaft, Size 3
13	04884804AA	16				ECN			SPRING, Valve

COMPASS/PATRIOT (MK)

SERIES	LINE	BODY	ENGINE	TRANSMISSION
H = HIGHLINE L = LOWLINE P = PREMIUM	J = JEEP - 4WD T = JEEP - 2WD	49 = HATCHBACK TYPE #2 74 = SPORT UTILITY 4-DR TYPE #4	ED3 = 2.4L 4 Cyl DOHC 16V Dual VVT Engine	DD7 = 5-Speed Manual T355 Transmission DEF = 6-Speed Manual Aisin BG6 Trans DAV = Continuously Variable Transmission DAW = Cont.Var. w/Off-Rd Crawl Ratio Trans

AR = use ase required - = Non illustrrated part

Timing Chain And Cover 2.0L [ECN]
Figure 2.0L-610

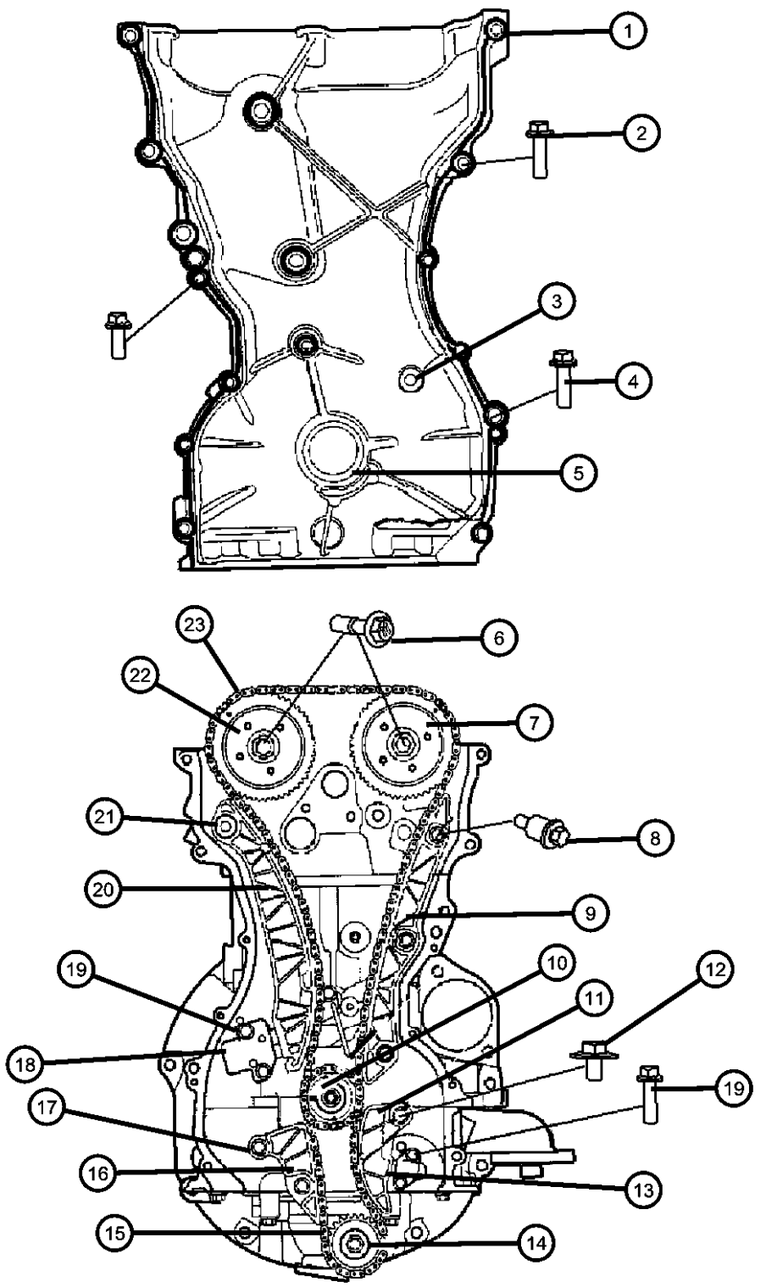

ITEM	PART NUMBER	QTY	LINE	SERIES	BODY	ENGINE	TRANS	TRIM	DESCRIPTION

NOTE:
Sales Codes:
[DAV] = Continuously Variable Transmission
[DEF] = 6-Speed Manual Aisian BG6 Transmission
[DEK] = 6-Speed Manual Getrag DM76 Transmission
[DE0] = All 6-Speed Manual Transmissions
[DD0] = All 5-Speed Manual Transmissions
[DD7] = 5-Speed Manual T355 Transmission
[EBA] = 1.8L 4 Cylinder DOHC 16 Valve VVT Engine
[ECD] = 2.0L 4 Cylinder DOHC Diesel 16 Valve Engine
[ECN] = 2.0L 4 Cylinder DOHC 16 Valve VVT Engine
[EC0] = All 2.0L 4 Cylinder Gas Engines
[ED3] = 2.4L 4 Cylinder DOHC 16 Valve Duel VVT Engine
[ED4] = 2.4L 4 Cylinder DOHC 16 Valve Turbo Engine
[ED0] = All 2.4L 4 Cylinder Gas Engines
[NAA] = Federal Emissions
[NAE] = California Emisssions
[NAS] = 50 State Emissions
[NA1] = Export Emissions

ITEM	PART NUMBER	QTY	LINE	SERIES	BODY	ENGINE	TRANS	TRIM	DESCRIPTION
1	04884895AA	1				ECN			COVER, Chain Case, Contains 3,5
2	04884895AA	1							BOLT, BOLT-FLANGE, [M6X25], (NOT SERVICED)
3									PLUG
	06102258AA	1	J, T, U		49	ECN, ED3			Timing Chain Tensioner Access
		1	J, T, U		74	ECN, ED3			
4	1140308283	6				ECN			BOLT, [M8X28], Timing Chain Cover To Engine Block, Mounting
5									SEAL, Crankshaft Oil, Front
	2142125000	1	J, T, U		49	ECN, ED3			
		1	J, T, U		74	ECN, ED3			
6	2436125000	2				ECN			BOLT, Phaser To Camshaft, Mounting
7									PHASER, Camshaft
	05047021AA	1	J, T, U		49	ECN, ED3			Variable Valve Timing Intake
		1	J, T, U		74	ECN, ED3			Variable Valve Timing Intake
8									BOLT
	2434825000	3	J, T, U		49	ECN, ED3			Timing Chain Guide Fixed To Engine Block, Mounting
		3	J, T, U		74	ECN, ED3			Timing Chain Guide Fixed To Engine Block, Mounting
9									GUIDE, Timing Chain, Fixed

COMPASS/PATRIOT (MK)

SERIES	LINE	BODY	ENGINE	TRANSMISSION
H = HIGHLINE L = LOWLINE P = PREMIUM	J = JEEP - 4WD T = JEEP - 2WD	49 = HATCHBACK TYPE #2 74 = SPORT UTILITY 4-DR TYPE #4	ED3 = 2.4L 4 Cyl DOHC 16V Dual VVT Engine	DD7 = 5-Speed Manual T355 Transmission DEF = 6-Speed Manual Aisin BG6 Trans DAV = Continuously Variable Transmission DAW = Cont.Var. w/Off-Rd Crawl Ratio Trans

Timing Chain And Cover 2.0L [ECN]
Figure 2.0L-610

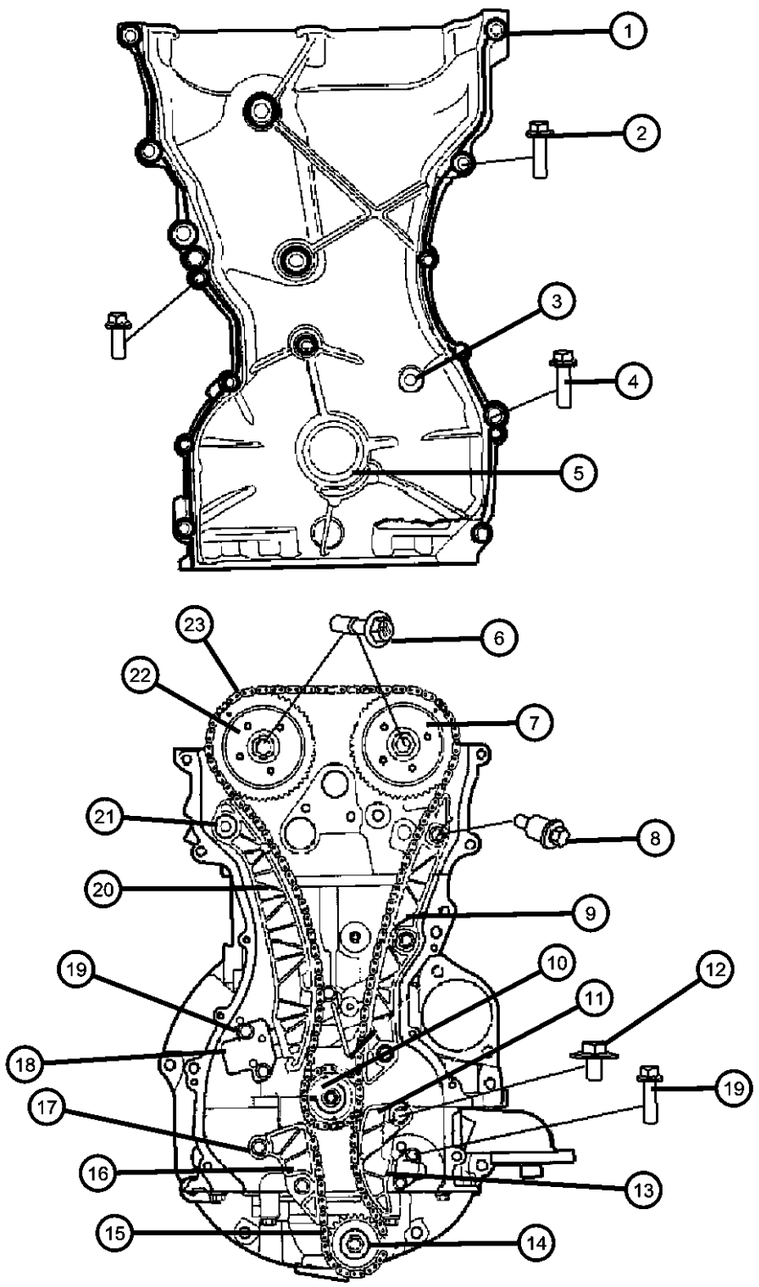

ITEM	PART NUMBER	QTY	LINE	SERIES	BODY	ENGINE	TRANS	TRIM	DESCRIPTION
	2443125000	1	U, J, T		49	ECN, ED3			
		1	J, T, U		74	ECN, ED3			
10									SPROCKET, Crankshaft
	04884587AA	1	J, T, U		49	ECN, ED3			
		1	J, T, U		74	ECN, ED3			
11									TENSIONER ARM, Balance Shaft Driver
	04884588AA	1	J, T, U		74	ECN, ED3			
		1	J, T, U		49	ED3, ECN			
12	2438825000	1				ECN			BOLT, Balanceshaft Chain Arm To Ladder, Mounting
13									TENSIONER, Chain
	04884876AA	1	J, T, U		49	ECN, ED3			Balance Shaft Chain, Secondary
		1	J, T, U		74	ECN, ED3			Balance Shaft Chain, Secondary
14		1							SPROCKET, Drive, Serviced With Oil Pump, (NOT SERVICED),
15									CHAIN, Balance Shaft
	04884870AB	1	J, T, U		49	ECN, ED3			
		1	J, T, U		74	ECN, ED3			
16									GUIDE, Balance Shaft Chain
	04884589AA	1	J, T, U		49	ECN, ED3			
		1	J, T, U		74	ECN, ED3			
17									BOLT
	2434825000	2	J, T, U		49	ECN, ED3			Balance Shaft Chain Guide, Mounting
		2	J, T, U		74	ECN, ED3			Balance Shaft Chain Guide, Mounting
18									TENSIONER, Chain
	2441025000	1	J, T, U		49	ECN, ED3			Primary
		1	J, T, U		74	ECN, ED3			Primary
19		1							BOLT, [M6X25] Service #1140306253, (NOT SERVICED)
20									TENSIONER ARM, Pivot
	2442025000	1	J, T, U		49	ECN, ED3			
		1	J, T, U		74	ECN, ED3			

COMPASS/PATRIOT (MK)

SERIES	LINE	BODY	ENGINE	TRANSMISSION
H = HIGHLINE L = LOWLINE P = PREMIUM	J = JEEP - 4WD T = JEEP - 2WD	49 = HATCHBACK TYPE #2 74 = SPORT UTILITY 4-DR TYPE #4	ED3 = 2.4L 4 Cyl DOHC 16V Dual VVT Engine	DD7 = 5-Speed Manual T355 Transmission DEF = 6-Speed Manual Aisin BG6 Trans DAV = Continuously Variable Transmission DAW = Cont.Var. w/Off-Rd Crawl Ratio Trans

Timing Chain And Cover 2.0L [ECN]
Figure 2.0L-610

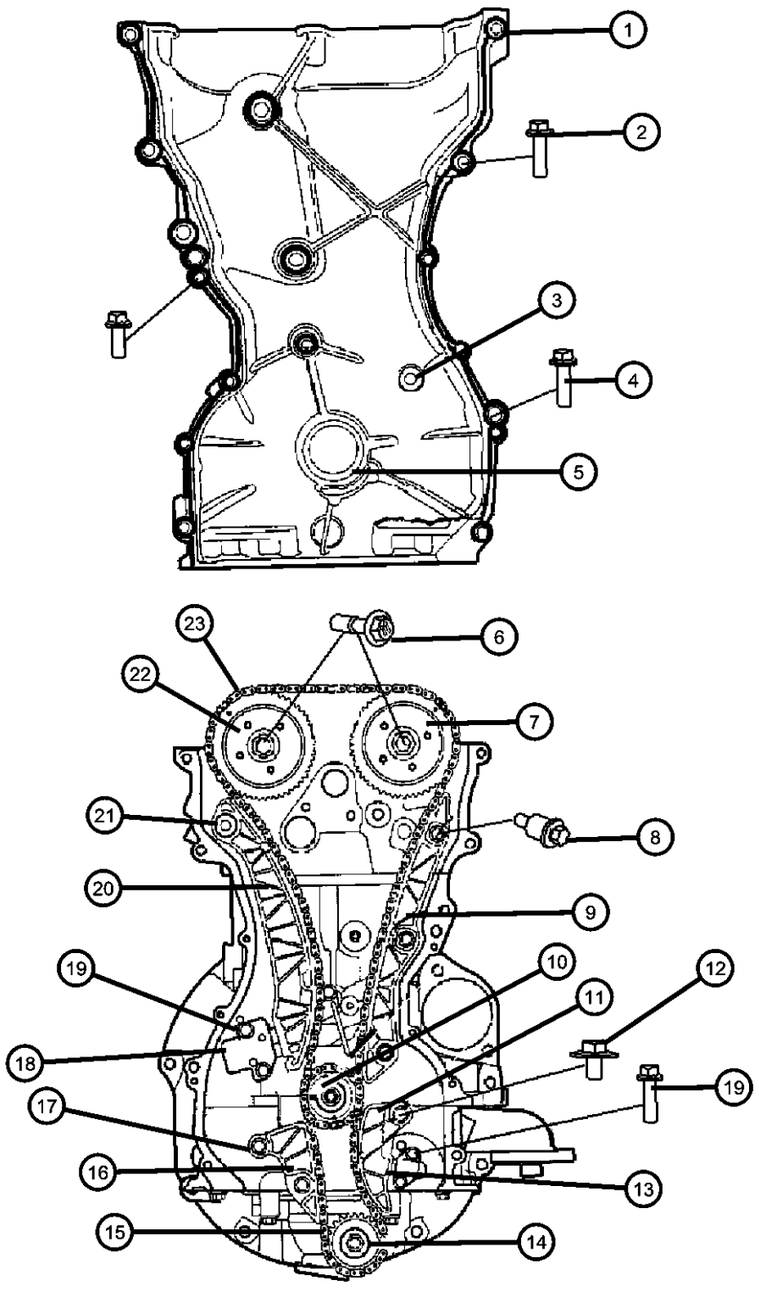

ITEM	PART NUMBER	QTY	LINE	SERIES	BODY	ENGINE	TRANS	TRIM	DESCRIPTION
21	2434925000	1				ECN			BOLT, Timing Chain Guide Piviot To Cylinder Head, Mounting
22									PHASER, Camshaft
	05047022AA	1	J, T, U		49	ECN, ED3			Variable Valve Timing Exhaust
		1	J, T, U		74	ECN, ED3			Variable Valve Timing Exhaust
23									CHAIN, Timing
	04884868AB	1	J, T, U		49	ECN, ED3			Primary
		1	J, T, U		74	ECN, ED3			Primary

COMPASS/PATRIOT (MK)

SERIES	LINE	BODY	ENGINE	TRANSMISSION
H = HIGHLINE L = LOWLINE P = PREMIUM	J = JEEP - 4WD T = JEEP - 2WD	49 = HATCHBACK TYPE #2 74 = SPORT UTILITY 4-DR TYPE #4	ED3 = 2.4L 4 Cyl DOHC 16V Dual VVT Engine	DD7 = 5-Speed Manual T355 Transmission DEF = 6-Speed Manual Aisin BG6 Trans DAV = Continuously Variable Transmission DAW = Cont.Var. w/Off-Rd Crawl Ratio Trans

Engine Oiling Pump, Balance Shafts And Oil Filter 2.0L [ECN]
Figure 2.0L-710

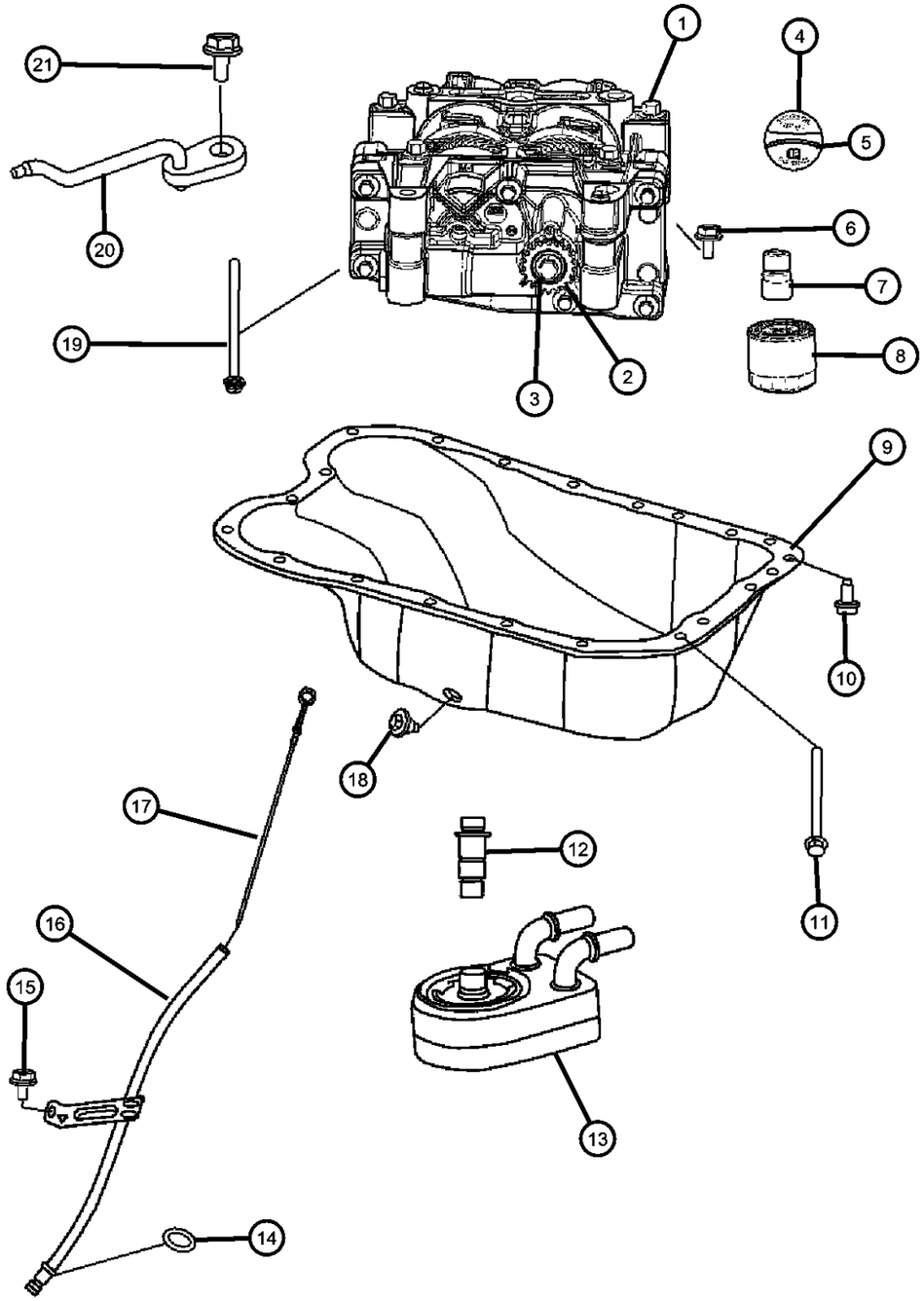

ITEM	PART NUMBER	QTY	LINE	SERIES	BODY	ENGINE	TRANS	TRIM	DESCRIPTION

NOTE:
Sales Codes:
[DAV] = Continuously Variable Transmission
[DEF] = 6-Speed Manual Aisian BG6 Transmission
[DEK] = 6-Speed Manual Getrag DM76 Transmission
[DE0] = All 6-Speed Manual Transmissions
[DD0] = All 5-Speed Manual Transmissions
[DD7] = 5-Speed Manual T355 Transmission
[EBA] = 1.8L 4 Cylinder DOHC 16 Valve VVT Engine
[ECD] = 2.0L 4 Cylinder DOHC Diesel 16 Valve Engine
[ECN] = 2.0L 4 Cylinder DOHC 16 Valve VVT Engine
[EC0] = All 2.0L 4 Cylinder Gas Engines
[ED3] = 2.4L 4 Cylinder DOHC 16 Valve Duel VVT Engine
[ED4] = 2.4L 4 Cylinder DOHC 16 Valve Turbo Engine
[ED0] = All 2.4L 4 Cylinder Gas Engines
[NAA] = Federal Emissions
[NAE] = California Emisssions
[NAS] = 50 State Emissions
[NA1] = Export Emissions

ITEM	PART NUMBER	QTY	LINE	SERIES	BODY	ENGINE	TRANS	TRIM	DESCRIPTION
1									SHAFT PACKAGE, Balance with Oil Pump
	05189870AB	1	J, T, U		49	ECN			Includes Mounting Bolts
		1	J, T, U		74	ECN			Includes Mounting Bolts
2		1							SPROCKET, Drive, Serviced With Oil Pump, (NOT SERVICED),
3		1							BOLT, BOLT, Serviced With Oil Pump, (NOT SERVICED)
4									CAP, Oil Filler
	04884739AA	1	J, T, U		49	ECN, ED3			Includes O-ring
		1	J, T, U		74	ECN, ED3			Includes O-ring
5									O RING
	68029299AA	1	J, T, U		49	ECN, ED3			Oil Filler Cap
		1	J, T, U		74	ECN, ED3			Oil Filler Cap
6									BOLT, [M8X1.25X180.00]
	06508618AA	4	J, T, U		49	ECN, ED3			Oil Pump To Engine Block, Mounting
		4	J, T, U		74	ECN, ED3			Oil Pump To Engine Block, Mounting
7									CONNECTOR, Oil Filter, [M20 / M22]
	04884902AA	1	J, T, U		49	ECN			Without [NHA] Oil Cooler
		1	J, T, U		74	ECN			Without [NHA] Oil Cooler

COMPASS/PATRIOT (MK)

SERIES	LINE	BODY	ENGINE	TRANSMISSION
H = HIGHLINE L = LOWLINE P = PREMIUM	J = JEEP - 4WD T = JEEP - 2WD	49 = HATCHBACK TYPE #2 74 = SPORT UTILITY 4-DR TYPE #4	ED3 = 2.4L 4 Cyl DOHC 16V Dual VVT Engine	DD7 = 5-Speed Manual T355 Transmission DEF = 6-Speed Manual Aisin BG6 Trans DAV = Continuously Variable Transmission DAW = Cont.Var. w/Off-Rd Crawl Ratio Trans

Engine Oiling Pump, Balance Shafts And Oil Filter 2.0L [ECN]
Figure 2.0L-710

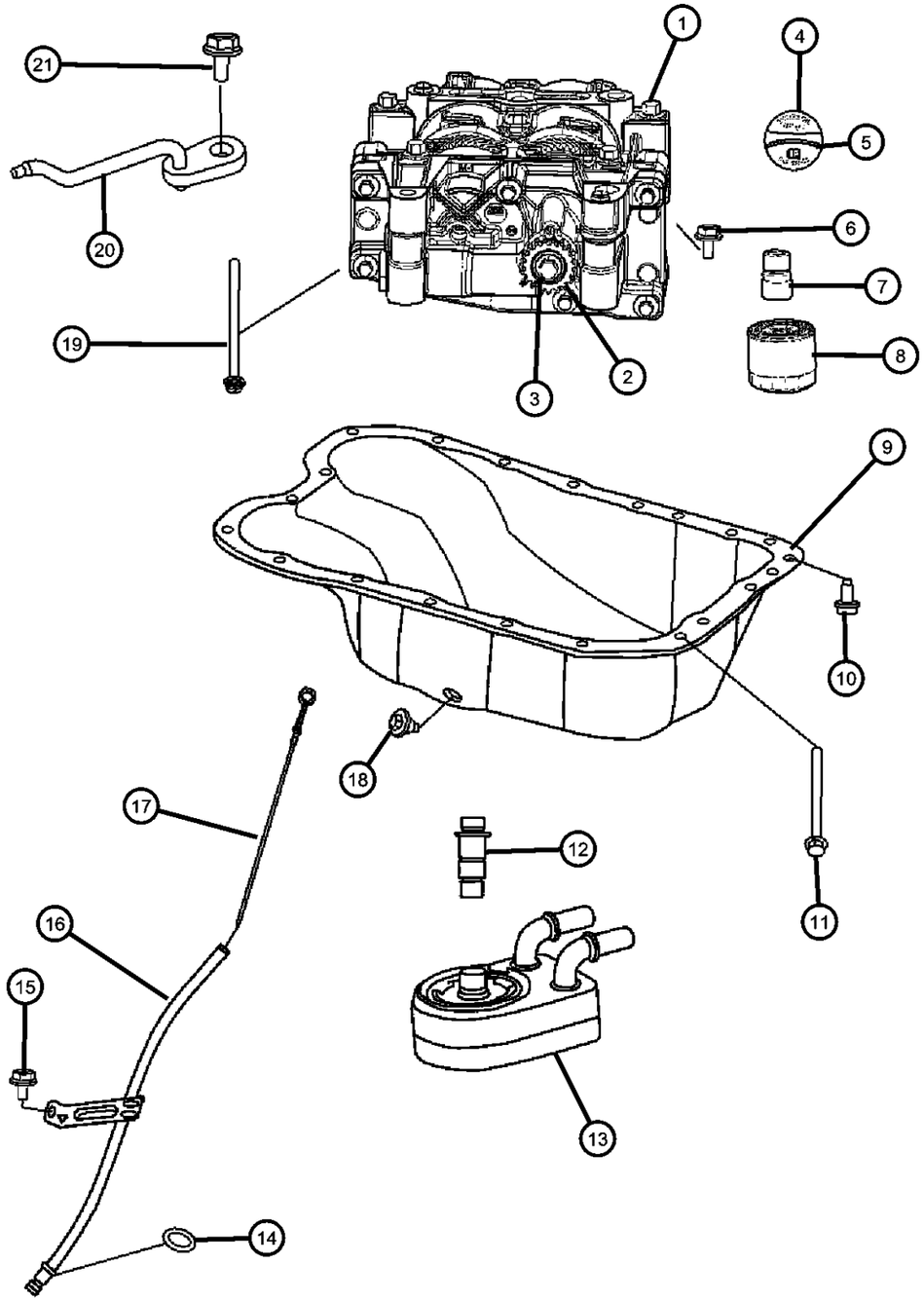

ITEM	PART NUMBER	QTY	LINE	SERIES	BODY	ENGINE	TRANS	TRIM	DESCRIPTION
8									FILTER, Engine Oil
	04884900AB	1	J, T, U		49	ECN, ED3			
		1	J, T, U		74	ECN, ED3			
9									PAN, Oil
	04884665AE	1	J, T, U		49	ECN, ED3			
		1	J, T, U		74	ECN, ED3			
10	2151635000	16				ECN			BOLT, [M6X13], Oil Pan To Ladder Frame, Mounting
11	06508714AA	2				ECN			BOLT, [M8X1.25X104.00], Oil Pan To Ladder Frame, Mounting
12	04884758AB	1				ECN			CONNECTOR, Engine Oil Cooler
13	04884757AD	1				ECN			COOLER, Engine Oil
14	04884757AD	1							O RING, Engine Oil Level Tube, Serviced With Indictor Tube. O-Ring Part # 2661423500, (NOT SERVICED)
15	06104003AA	1	J, T, U		74	ECN, ED3			SCREW, [M6X1.00X10.00], Engine Oil Indicator Tube To Cylinder Block, Mounting
16									TUBE, Engine Oil Indicator
	04884733AB	1	J, T, U		49	ECN, ED3			
		1	J, T, U		74	ECN, ED3			
17									INDICATOR, Engine Oil Level
	04884688AD	1	J, T, U		49	ECN, ED3			
		1	J, T, U		74	ECN, ED3			
18	06507741AA	1				ECN			PLUG, Oil Drain, [M14X1.50X21.50]
19									BOLT, [M8X1.25X180.00]
	06508618AA	4	J, T, U		49	ECN, ED3			Oil Pump To Engine Block, Mounting
		4	J, T, U		74	ECN, ED3			Oil Pump To Engine Block, Mounting
20									INJECTOR, Oil
	04884767AA	1	J, T, U		49	ECN, ED3			
		1	J, T, U		74	ECN, ED3			
21									BOLT, [M6X12]

COMPASS/PATRIOT (MK)

SERIES	LINE	BODY	ENGINE	TRANSMISSION
H = HIGHLINE L = LOWLINE P = PREMIUM	J = JEEP - 4WD T = JEEP - 2WD	49 = HATCHBACK TYPE #2 74 = SPORT UTILITY 4-DR TYPE #4	ED3 = 2.4L 4 Cyl DOHC 16V Dual VVT Engine	DD7 = 5-Speed Manual T355 Transmission DEF = 6-Speed Manual Aisin BG6 Trans DAV = Continuously Variable Transmission DAW = Cont.Var. w/Off-Rd Crawl Ratio Trans

Engine Oiling Pump, Balance Shafts And Oil Filter 2.0L [ECN]
Figure 2.0L-710

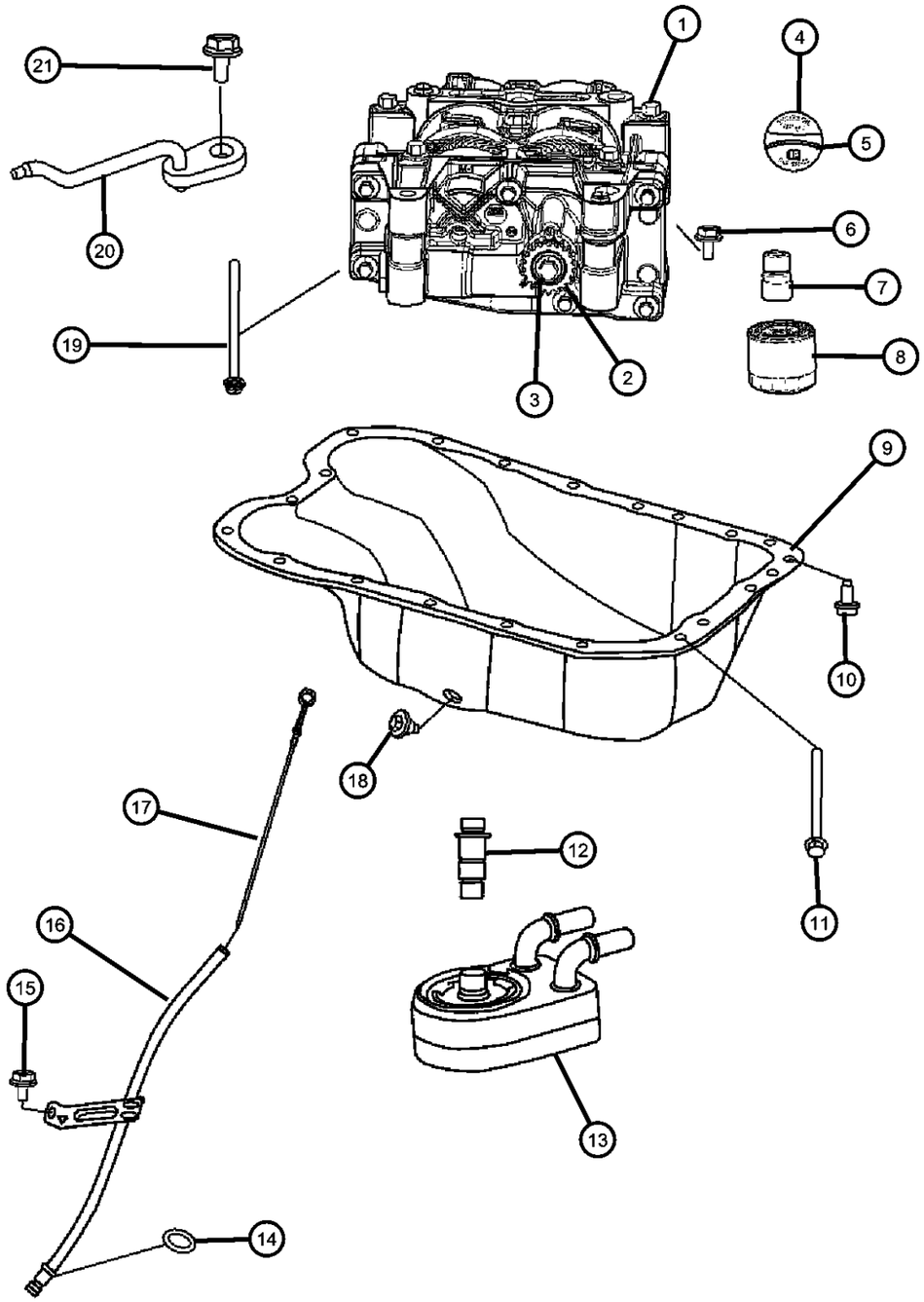

ITEM	PART NUMBER	QTY	LINE	SERIES	BODY	ENGINE	TRANS	TRIM	DESCRIPTION
	1140306123	1	J, T, U		49	ECN, ED3			Oil Injector To Engine Block, Mounting
		1	J, T, U		74	ECN, ED3			Oil Injector To Engine Block, Mounting

COMPASS/PATRIOT (MK)

SERIES	LINE	BODY	ENGINE	TRANSMISSION
H = HIGHLINE	J = JEEP - 4WD	49 = HATCHBACK TYPE #2	ED3 = 2.4L 4 Cyl DOHC 16V Dual VVT Engine	DD7 = 5-Speed Manual T355 Transmission
L = LOWLINE	T = JEEP - 2WD	74 = SPORT UTILITY 4-DR TYPE #4		DEF = 6-Speed Manual Aisin BG6 Trans
P = PREMIUM				DAV = Continuously Variable Transmission
				DAW = Cont.Var. w/Off-Rd Crawl Ratio Trans

AR = use ase required - = Non illustrrated part

Intake Manifold And Components 2.0L [ECN]
Figure 2.0L-810

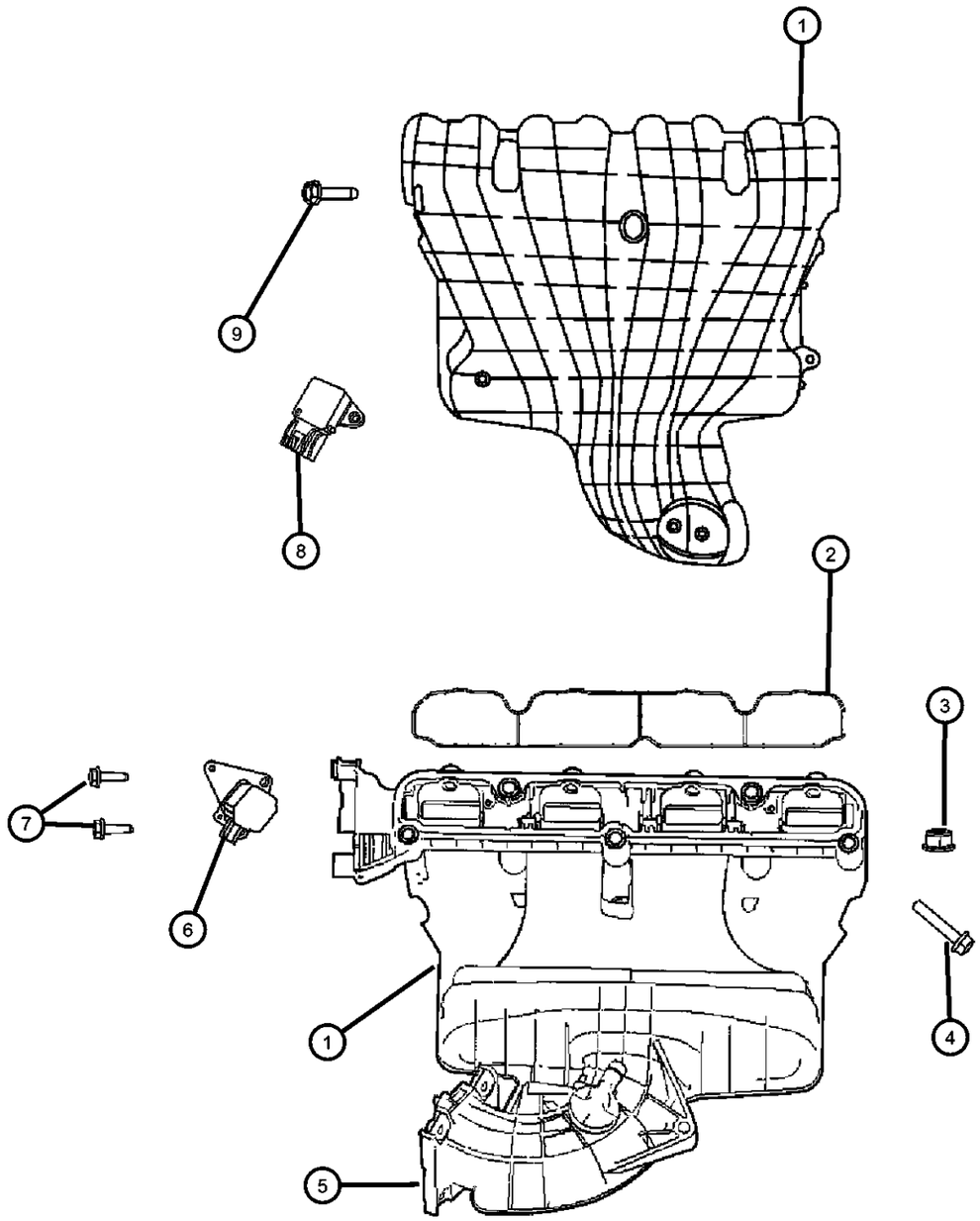

ITEM	PART NUMBER	QTY	LINE	SERIES	BODY	ENGINE	TRANS	TRIM	DESCRIPTION

NOTE:
Sales Codes:
[DAV] = Continuously Variable Transmission
[DEF] = 6-Speed Manual Aisian BG6 Transmission
[DEK] = 6-Speed Manual Getrag DM76 Transmission
[DE0] = All 6-Speed Manual Transmissions
[DD0] = All 5-Speed Manual Transmissions
[DD7] = 5-Speed Manual T355 Transmission
[EBA] = 1.8L 4 Cylinder DOHC 16 Valve VVT Engine
[ECD] = 2.0L 4 Cylinder DOHC Diesel 16 Valve Engine
[ECN] = 2.0L 4 Cylinder DOHC 16 Valve VVT Engine
[EC0] = All 2.0L 4 Cylinder Gas Engines
[ED3] = 2.4L 4 Cylinder DOHC 16 Valve Duel VVT Engine
[ED4] = 2.4L 4 Cylinder DOHC 16 Valve Turbo Engine
[ED0] = All 2.4L 4 Cylinder Gas Engines
[NAA] = Federal Emissions
[NAE] = California Emisssions
[NAS] = 50 State Emissions
[NA1] = Export Emissions

ITEM	PART NUMBER	QTY	LINE	SERIES	BODY	ENGINE	TRANS	TRIM	DESCRIPTION
1	04884495AD	1				ECN			MANIFOLD, Intake
2									GASKET, Intake Manifold
	04884550AB	1	J, T, U		49	ECN, ED3			
		1	J, T, U		74	ECN, ED3			
3	06104716AA	2				EBA, ECN, ED3			NUT, [M8X1.25], Intake Manifold To Cylinder Head, Mounting
4									BOLT, [M8X1.25X45.0]
	06104201AA	3	J, T, U		49	ECN, ED3			Intake Manifold To Cylinder Head, Mounting
		3	T, U, J		74	ECN, ED3			Intake Manifold To Cylinder Head, Mounting
		1	J, T, U		49	ECN, ED3			Intake Manifold Support Bracket To Engine Block, Mounting
		1	J, T, U		74	ECN, ED3			Intake Manifold Support Bracket To Engine Block, Mounting
5									BRACKET, Throttle Body Support
	04884871AA	1	J, T, U		49	ECN, ED3			
		1	J, T, U		74	ECN, ED3			
6									ACTUATOR, Flow Control Valve
	04884549AD	1	J, T, U		49	ECN, ED3			
		1	J, T, U		74	ECN, ED3			

COMPASS/PATRIOT (MK)

SERIES	LINE	BODY	ENGINE	TRANSMISSION
H = HIGHLINE L = LOWLINE P = PREMIUM	J = JEEP - 4WD T = JEEP - 2WD	49 = HATCHBACK TYPE #2 74 = SPORT UTILITY 4-DR TYPE #4	ED3 = 2.4L 4 Cyl DOHC 16V Dual VVT Engine	DD7 = 5-Speed Manual T355 Transmission DEF = 6-Speed Manual Aisin BG6 Trans DAV = Continuously Variable Transmission DAW = Cont.Var. w/Off-Rd Crawl Ratio Trans

Intake Manifold And Components 2.0L [ECN]
Figure 2.0L-810

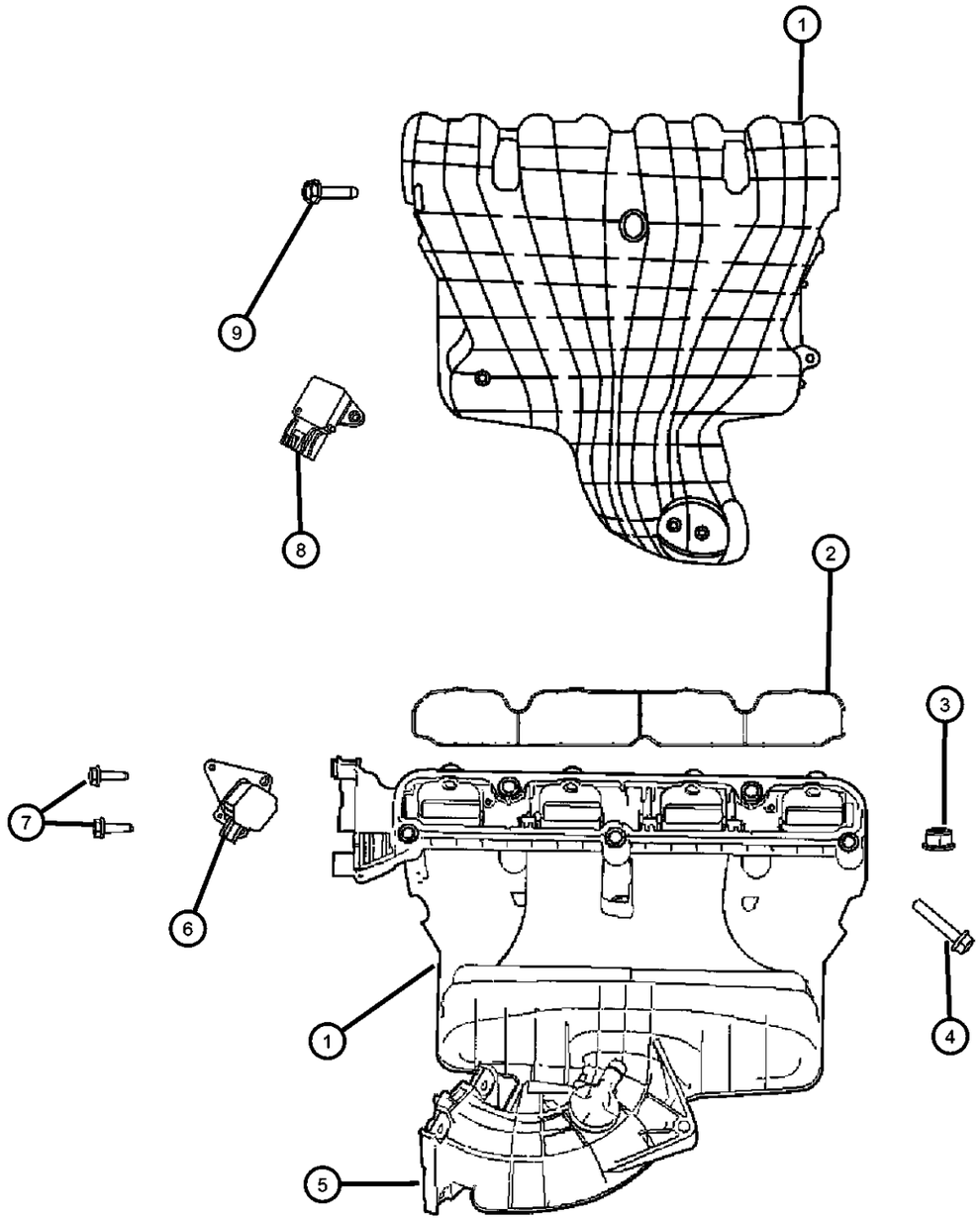

ITEM	PART NUMBER	QTY	LINE	SERIES	BODY	ENGINE	TRANS	TRIM	DESCRIPTION
7	06507736AA	2				ECN			BOLT, [M5.74X1.81X21.5], Actuator To Intake Manifold, Mounting
8									SENSOR, MAP
	05033310AB	1	J, T, U		49	ECN, ED3			
		1	J, T, U		74	ECN, ED3			
9	06505841AA	1				ECN			SCREW, [M4.06X1.41X17.0], Map Sensor To Intake Manifold, Mounting

COMPASS/PATRIOT (MK)

SERIES	LINE	BODY	ENGINE	TRANSMISSION
H = HIGHLINE L = LOWLINE P = PREMIUM	J = JEEP - 4WD T = JEEP - 2WD	49 = HATCHBACK TYPE #2 74 = SPORT UTILITY 4-DR TYPE #4	ED3 = 2.4L 4 Cyl DOHC 16V Dual VVT Engine	DD7 = 5-Speed Manual T355 Transmission DEF = 6-Speed Manual Aisin BG6 Trans DAV = Continuously Variable Transmission DAW = Cont.Var. w/Off-Rd Crawl Ratio Trans

AR = use ase required - = Non illustrrated part

Exhaust Manifold And Components 2.0L [ECN]
Figure 2.0L-820

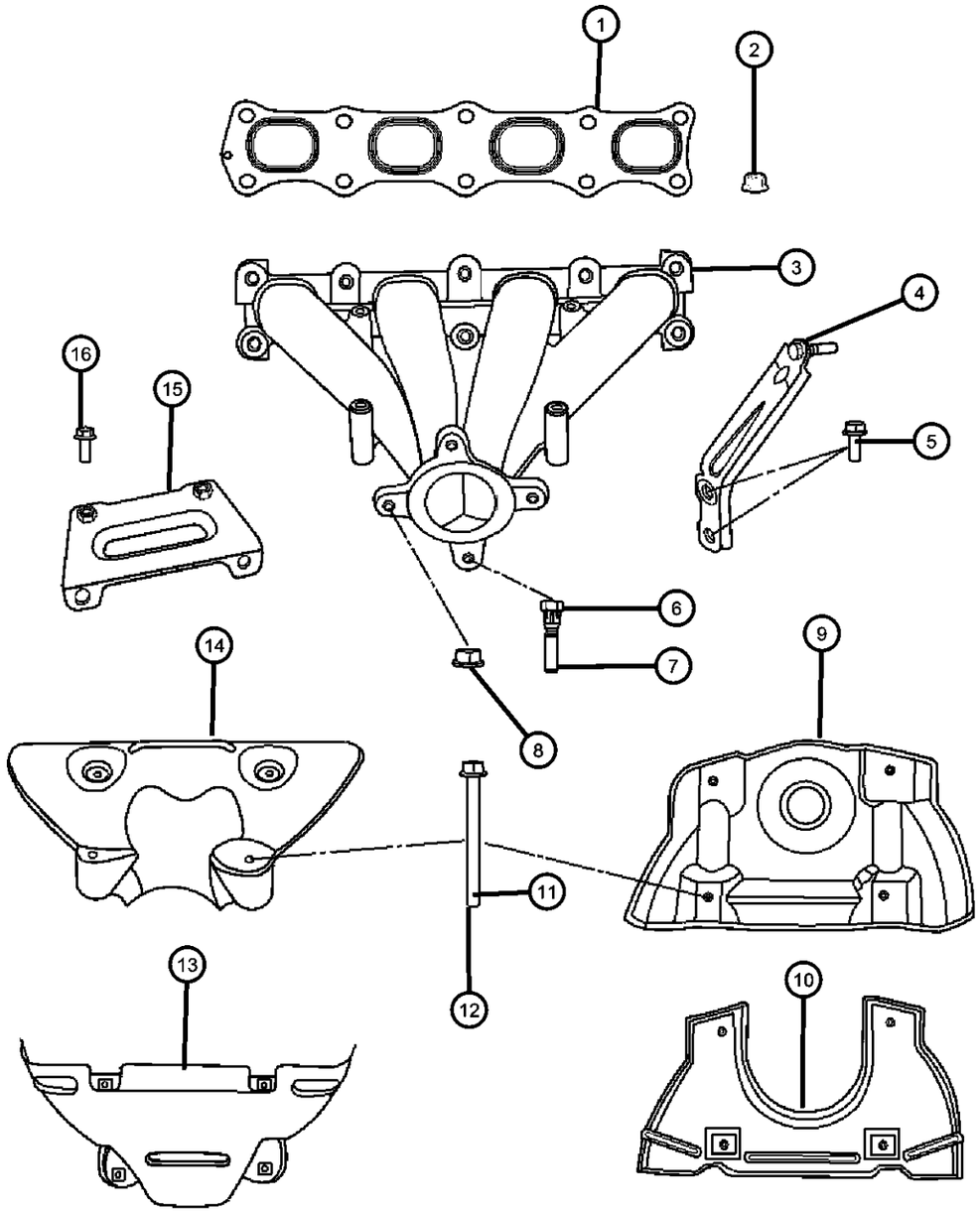

ITEM	PART NUMBER	QTY	LINE	SERIES	BODY	ENGINE	TRANS	TRIM	DESCRIPTION

NOTE:
Sales Codes:
[DAV] = Continuously Variable Transmission
[DEF] = 6-Speed Manual Aisian BG6 Transmission
[DEK] = 6-Speed Manual Getrag DM76 Transmission
[DE0] = All 6-Speed Manual Transmissions
[DD0] = All 5-Speed Manual Transmissions
[DD7] = 5-Speed Manual T355 Transmission
[EBA] = 1.8L 4 Cylinder DOHC 16 Valve VVT Engine
[ECD] = 2.0L 4 Cylinder DOHC Diesel 16 Valve Engine
[ECN] = 2.0L 4 Cylinder DOHC 16 Valve VVT Engine
[EC0] = All 2.0L 4 Cylinder Gas Engines
[ED3] = 2.4L 4 Cylinder DOHC 16 Valve Duel VVT Engine
[ED4] = 2.4L 4 Cylinder DOHC 16 Valve Turbo Engine
[ED0] = All 2.4L 4 Cylinder Gas Engines
[NAA] = Federal Emissions
[NAE] = California Emisssions
[NAS] = 50 State Emissions
[NA1] = Export Emissions

ITEM	PART NUMBER	QTY	LINE	SERIES	BODY	ENGINE	TRANS	TRIM	DESCRIPTION
1									GASKET, Exhaust Manifold
	1555A185	1	J, T, U		49	ECN, ED3			
		1	J, T, U		74	ECN, ED3			
2									NUT
	1022510003	2	J, T, U		49	ECN, ED3			Exhaust Manifold To Cylinder Head, Mounting
		2	J, T, U		74	ECN, ED3			Exhaust Manifold To Cylinder Head, Mounting
3	04693321AD	1	T		49, 74				MANIFOLD, Exhaust
4	04693350AC	1	T		49, 74				BRACKET, Exhaust ManifoldSup-port
5	06104215AA	2	T		49, 74		DAV, DAW		BOLT, [M10X1.5X25.0], Exhaust Manifold Bracket To Cylinder Block, Mounting
6	06505926AA	1				ECN			BOLT, Hex Head, [M8X1.25X40.00], Exhaust Manifold To Front Exhaust Pipe, Mounting
7	06508185AA	6	T		49, 74				BOLT, [M10X1.25X30.00], Exhaust Manifold To Cylinder Head, Mounting
8	06104716AA	4	J, T, U		49, 74				NUT, [M8.0X1.25X8.0], Exhaust Manifold To cylinder Head, Mounting
9	04693326AC	1							SHIELD, Heat, AWD Only, Upper

COMPASS/PATRIOT (MK)

SERIES	LINE	BODY	ENGINE	TRANSMISSION
H = HIGHLINE L = LOWLINE P = PREMIUM	J = JEEP - 4WD T = JEEP - 2WD	49 = HATCHBACK TYPE #2 74 = SPORT UTILITY 4-DR TYPE #4	ED3 = 2.4L 4 Cyl DOHC 16V Dual VVT Engine	DD7 = 5-Speed Manual T355 Transmission DEF = 6-Speed Manual Aisin BG6 Trans DAV = Continuously Variable Transmission DAW = Cont.Var. w/Off-Rd Crawl Ratio Trans

Exhaust Manifold And Components 2.0L [ECN]
Figure 2.0L-820

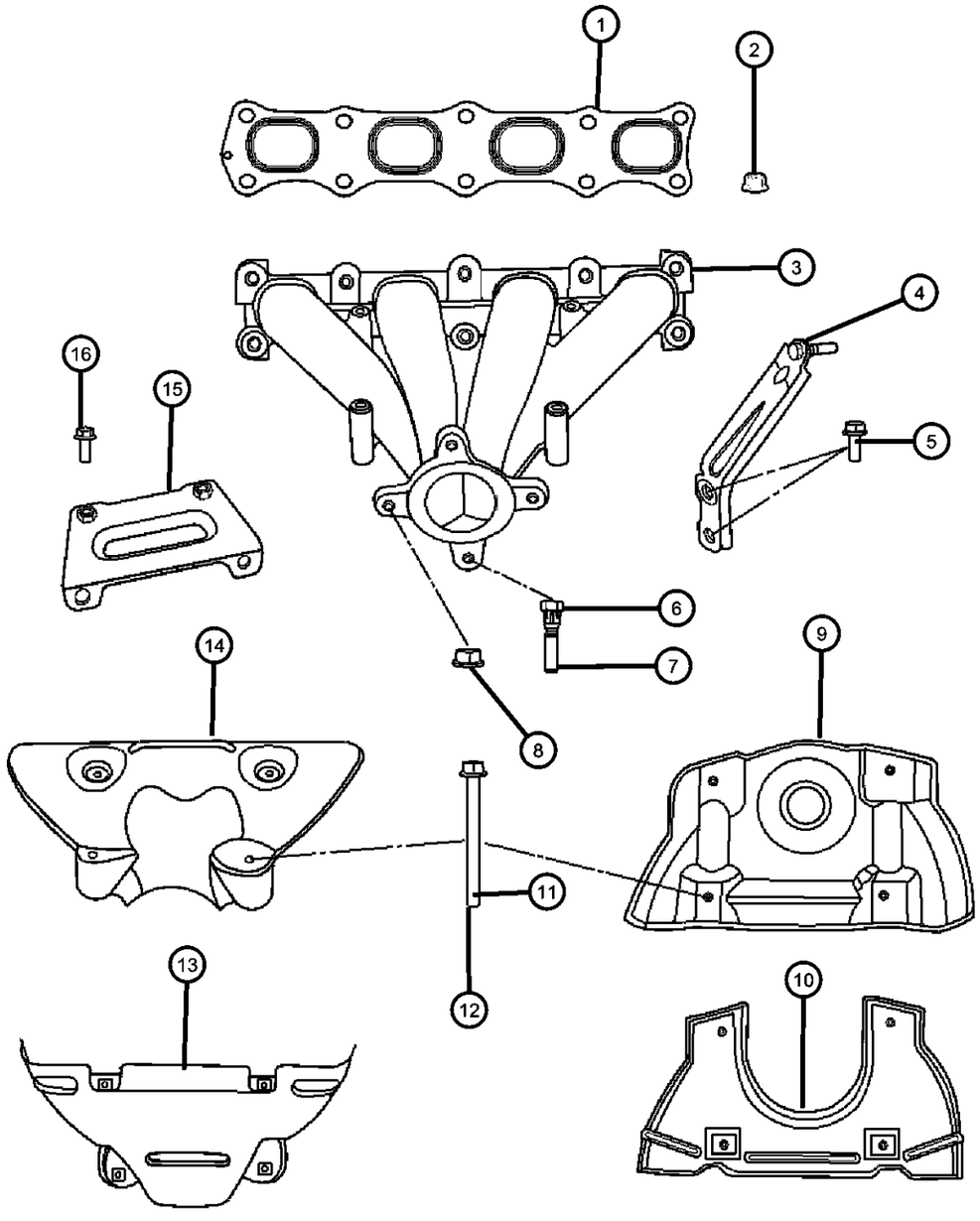

ITEM	PART NUMBER	QTY	LINE	SERIES	BODY	ENGINE	TRANS	TRIM	DESCRIPTION
10	04693327AC	1							SHIELD, Heat, AWD Only, Lower
11									BOLT, M6X1.0X70.0
	06104191AA	4	J, T, U		49	ECN, ED3			Heat Sheild To Exhaust Manifold, Mounting
		4	J, T, U		74	ECN, ED3			Heat Sheild To Exhaust Manifold, Mounting
12	06501474	2	J		49				BOLT, Hex Head, M8x1.25x16, Exhaust Manifold Bracket To Manifold, Mounting
13	04693349AB	1	T		49, 74				SHIELD, Exhaust Manifold, FWD Only, Lower
14	04693348AB	1	T						SHIELD, Exhaust Manifold, FWD Only, Upper
15	04693351AC	1							BRACKET, Exhaust Manifold
16	06104215AA	2	T		49, 74		DAV, DAW		BOLT, Exhaust Manifold Bracket To Engine Block, Mounting

COMPASS/PATRIOT (MK)

SERIES	LINE	BODY	ENGINE	TRANSMISSION
H = HIGHLINE L = LOWLINE P = PREMIUM	J = JEEP - 4WD T = JEEP - 2WD	49 = HATCHBACK TYPE #2 74 = SPORT UTILITY 4-DR TYPE #4	ED3 = 2.4L 4 Cyl DOHC 16V Dual VVT Engine	DD7 = 5-Speed Manual T355 Transmission DEF = 6-Speed Manual Aisin BG6 Trans DAV = Continuously Variable Transmission DAW = Cont.Var. w/Off-Rd Crawl Ratio Trans

Crankcase Ventilation 2.0L [ECN]
Figure 2.0L-910

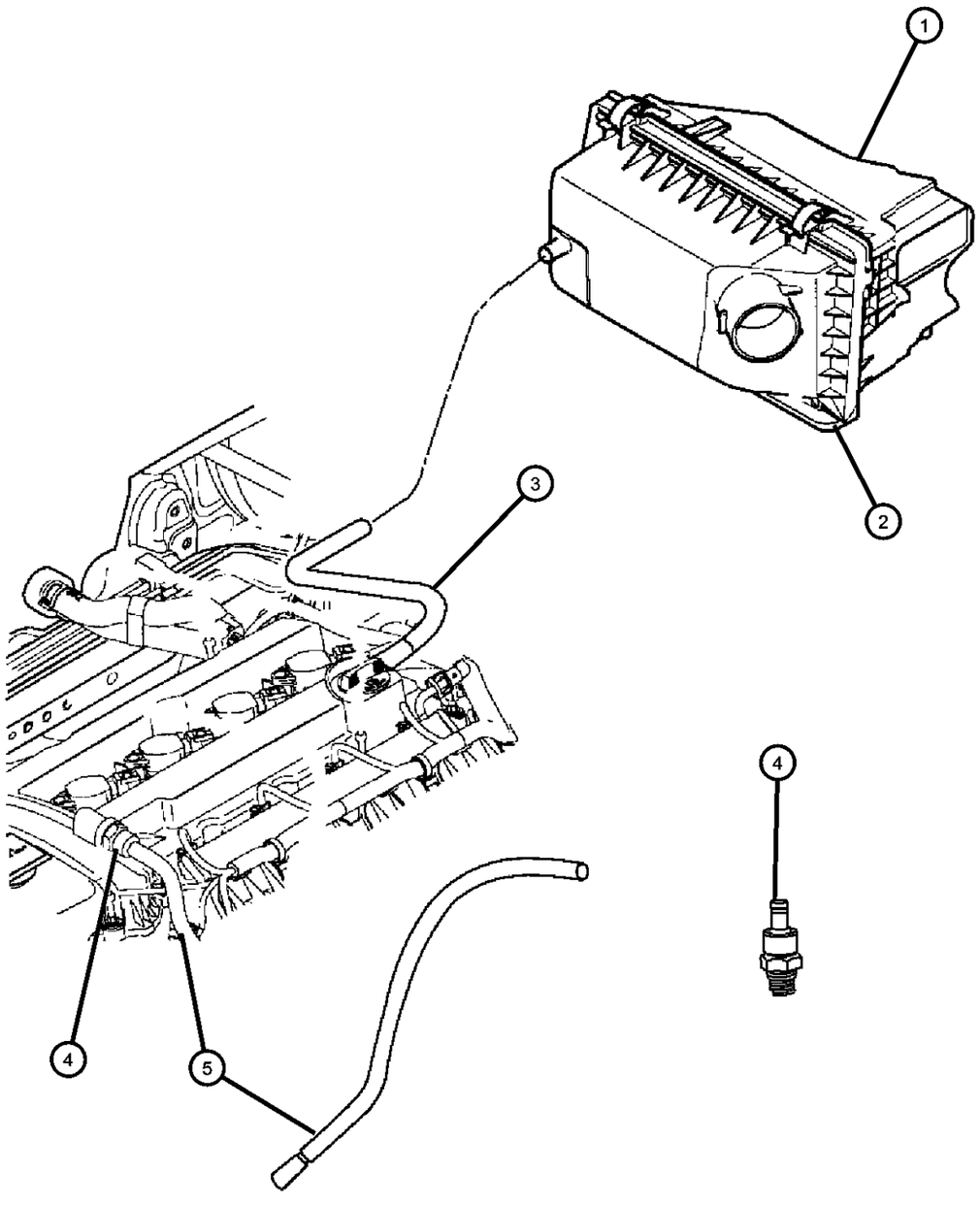

ITEM	PART NUMBER	QTY	LINE	SERIES	BODY	ENGINE	TRANS	TRIM	DESCRIPTION

NOTE:
Sales Codes:
[DAV] = Continuously Variable Transmission
[DEF] = 6-Speed Manual Aisian BG6 Transmission
[DEK] = 6-Speed Manual Getrag DM76 Transmission
[DE0] = All 6-Speed Manual Transmissions
[DD0] = All 5-Speed Manual Transmissions
[DD7] = 5-Speed Manual T355 Transmission
[EBA] = 1.8L 4 Cylinder DOHC 16 Valve VVT Engine
[ECD] = 2.0L 4 Cylinder DOHC Diesel 16 Valve Engine
[ECN] = 2.0L 4 Cylinder DOHC 16 Valve VVT Engine
[EC0] = All 2.0L 4 Cylinder Gas Engines
[ED3] = 2.4L 4 Cylinder DOHC 16 Valve Duel VVT Engine
[ED4] = 2.4L 4 Cylinder DOHC 16 Valve Turbo Engine
[ED0] = All 2.4L 4 Cylinder Gas Engines
[NAA] = Federal Emissions
[NAE] = California Emisssions
[NAS] = 50 State Emissions
[NA1] = Export Emissions

ITEM	PART NUMBER	QTY	LINE	SERIES	BODY	ENGINE	TRANS	TRIM	DESCRIPTION
1									BODY, Air Cleaner
	05183089AA	1	J, T, U		49	ECN, ED3			
		1	J, T, U		74	ECN, ED3			
2									COVER, Air Cleaner
	05183088AB	1	J, T, U		49	ECN, ED3			
		1	J, T, U		74	ECN, ED3			
3									HOSE, Make Up Air
	05047000AA	1	J, T, U		49	ECN, ED3			
		1	J, T, U		74	ECN, ED3			
4									VALVE, PCV
	05047002AA	1	J, T, U		74	ECN, ED3			15mm Nipple
		1	J, T, U		49	ECN, ED3			15mm Nipple
5									HOSE, PCV Valve
	05047001AA	1	J, T, U		49	ECN, ED3			
		1	J, T, U		74	ECN, ED3			

COMPASS/PATRIOT (MK)

SERIES	LINE	BODY	ENGINE	TRANSMISSION
H = HIGHLINE L = LOWLINE P = PREMIUM	J = JEEP - 4WD T = JEEP - 2WD	49 = HATCHBACK TYPE #2 74 = SPORT UTILITY 4-DR TYPE #4	ED3 = 2.4L 4 Cyl DOHC 16V Dual VVT Engine	DD7 = 5-Speed Manual T355 Transmission DEF = 6-Speed Manual Aisin BG6 Trans DAV = Continuously Variable Transmission DAW = Cont.Var. w/Off-Rd Crawl Ratio Trans

Group - 2.4L

Engine 2.4L Four Cylinder

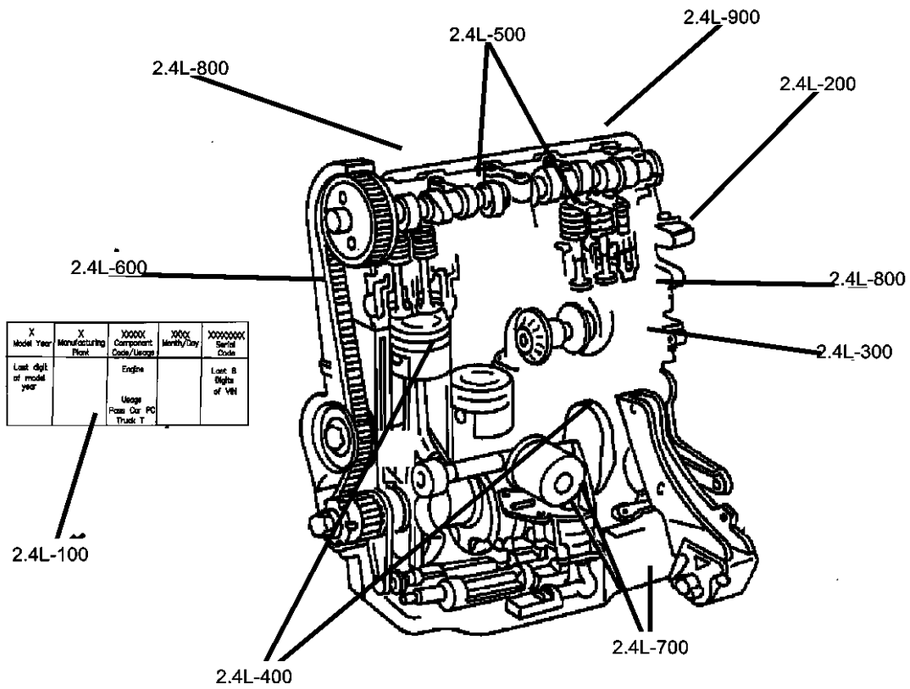

2.4L-100
Engine Identification

X Model Year	X Manufacturing Plant	XXXXX Component Code/Usage	XXXX Month/Day	XXXXXXXX Serial Code
Last digit of model year	Saltillo S Trenton T Toluca K	Engine 3.3L – 3.8L Usage Pass Car PC Truck T		Last 8 Digits of VIN

2.4L-200
Cylinder Head

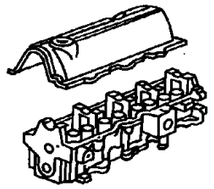

2.4L-300
Cylinder Block

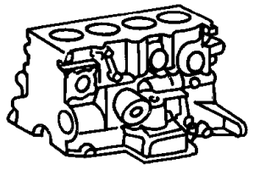

2.4L-400
Crankshaft, Piston, and Drive Plate

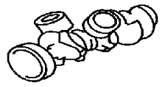

2.4L-500
Camshafts and Valves

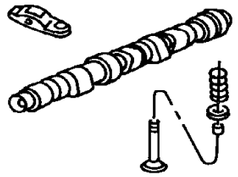

2.4L-600
Timing Belt and Cover

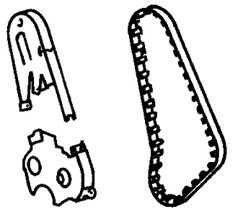

2.4L-700
Engine Oiling

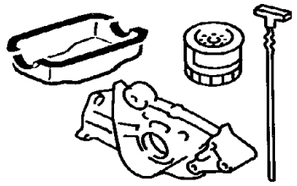

2.4L-800
Manifolds

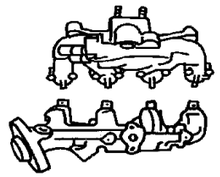

2.4L-900
Crankcase Ventilation

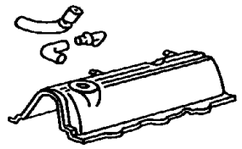

Group - 2.4L Engine 2.4L Four Cylinder

Illustration Title — Group-Fig. No.

Engine Identification
Engine Assembly And Identification 2.4L [ED3] ..... Fig. 2.4L - 110
Gasket Packages 2.4L [ED3] ..... Fig. 2.4L - 120
Engine Cover And Components 2.4L [ED3] ..... Fig. 2.4L - 130

Cylinder Head
Cylinder Head Cover And Components 2.4L [ED3] ..... Fig. 2.4L - 210
Cylinder Head And Components 2.4L [ED3] ..... Fig. 2.4L - 220

Cylinder Block
Engine Block And Components 2.4L [ED3] ..... Fig. 2.4L - 310

Crankshaft, Piston, and Drive Plate
Crankshaft Pistons And Driveplate 2.4L [ED3] ..... Fig. 2.4L - 410

Camshafts and Valves
Camshafts And Valves 2.4L [ED3] ..... Fig. 2.4L - 510

Timing Belt and Cover
Timing Chain And Cover 2.4L [ED3] ..... Fig. 2.4L - 610

Engine Oiling
Engine Oiling Pump, Balance Shaft And Oil Filter 2.4L [ED3] ..... Fig. 2.4L - 710

Manifolds
Intake Manifold And Components 2.4L [ED3] ..... Fig. 2.4L - 810
Exhaust Manifold And Components 2.4L [ED3] ..... Fig. 2.4L - 820

Crankcase Ventilation
Crankcase Ventilation 2.4L [ED3] ..... Fig. 2.4L - 910

Engine Assembly And Identification 2.4L [ED3]
Figure 2.4L-110

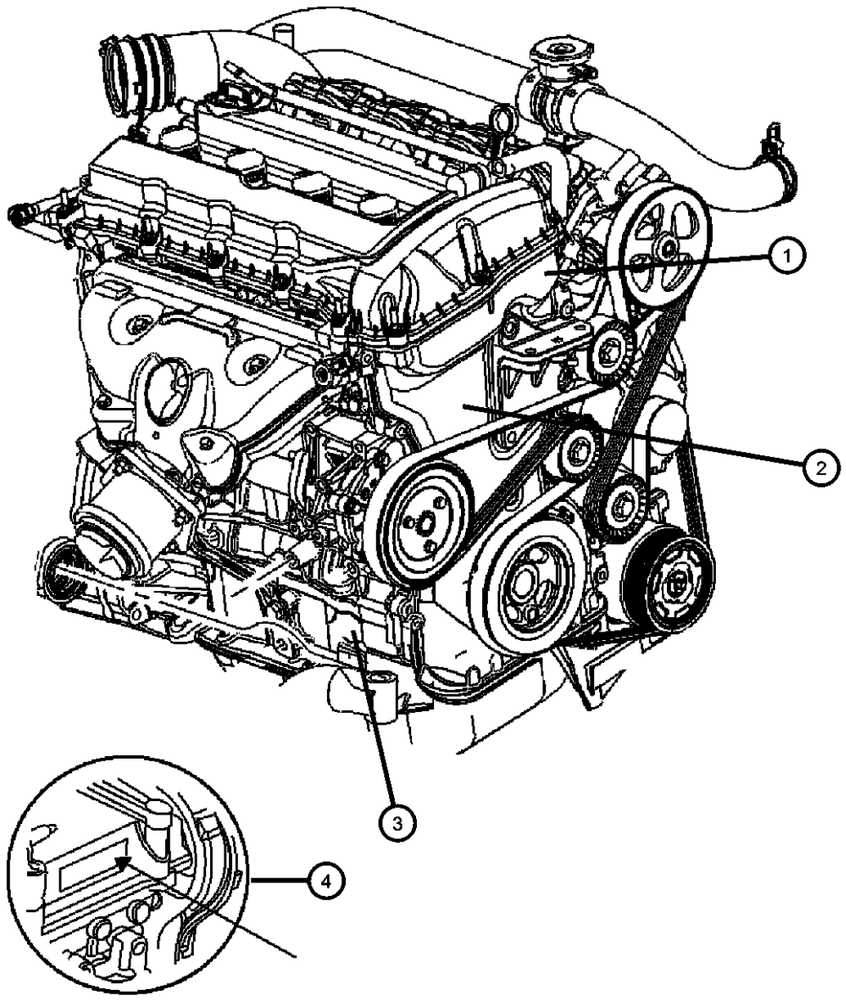

ITEM	PART NUMBER	QTY	LINE	SERIES	BODY	ENGINE	TRANS	TRIM	DESCRIPTION

NOTE:
The Engine Identifaction Label Contains: The Production Assembly Part Number And Displacement. It Is Located On The Valve Cover In The Rear
Long Block Contains: Complete Cylinder Head, [Intake Valves, Exhaust Valves, Valve Seals, Valve Retainers, Valve Springs, Camshafts, Camshat
Short Block Contains: Crankshaft, Pistons, Connecting Rods, Piston Rings, Crankshaft Bearings, Connecting Rod Bearings, Sensor Target Wheel
Sales Codes:
[DAV] = Continuously Variable Transmission
[DEF] = 6-Speed Manual Aisian BG6 Transmission
[DE0] = All 6-Speed Manual Transmissions
[DD0] = All 5-Speed Manual Transmissions
[DD7] = 5-Speed Manual T355 Transmission
[ECD] = 2.0L 4 Cylinder DOHC Diesel 16 Valve Engine
[ED3] = 2.4L 4 Cylinder DOHC 16 Valve Duel VVT Engine
[ED0] = All 2.4L 4 Cylinder Gas Engines
[NAA] = Federal Emissions
[NAE] = California Emisssions
[NAS] = 50 States Emissions
[NA1] = Export Emissions

1		1							ENGINE, Complete, Serviced By Long Block Or Short Block Only, (NOT SERVICED)
2	04884603AC	1				ED3			ENGINE, Long Block, See Note
3	05183906AA	1				ED3			BLOCK, SHORT, See Note
4	05183906AA	1							LABEL, Engine Identification, See Note, (NOT SERVICED)

COMPASS/PATRIOT (MK)

SERIES	LINE	BODY	ENGINE	TRANSMISSION
H = HIGHLINE L = LOWLINE P = PREMIUM	J = JEEP - 4WD T = JEEP - 2WD	49 = HATCHBACK TYPE #2 74 = SPORT UTILITY 4-DR TYPE #4	ED3 = 2.4L 4 Cyl DOHC 16V Dual VVT Engine	DD7 = 5-Speed Manual T355 Transmission DEF = 6-Speed Manual Aisin BG6 Trans DAV = Continuously Variable Transmission DAW = Cont.Var. w/Off-Rd Crawl Ratio Trans

Gasket Packages 2.4L [ED3]
Figure 2.4L-120

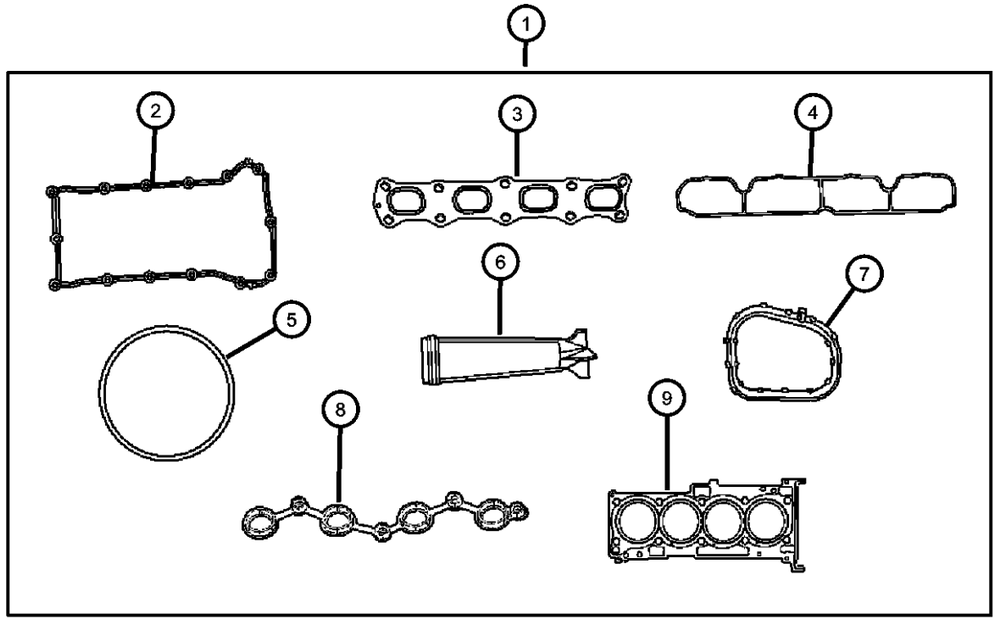

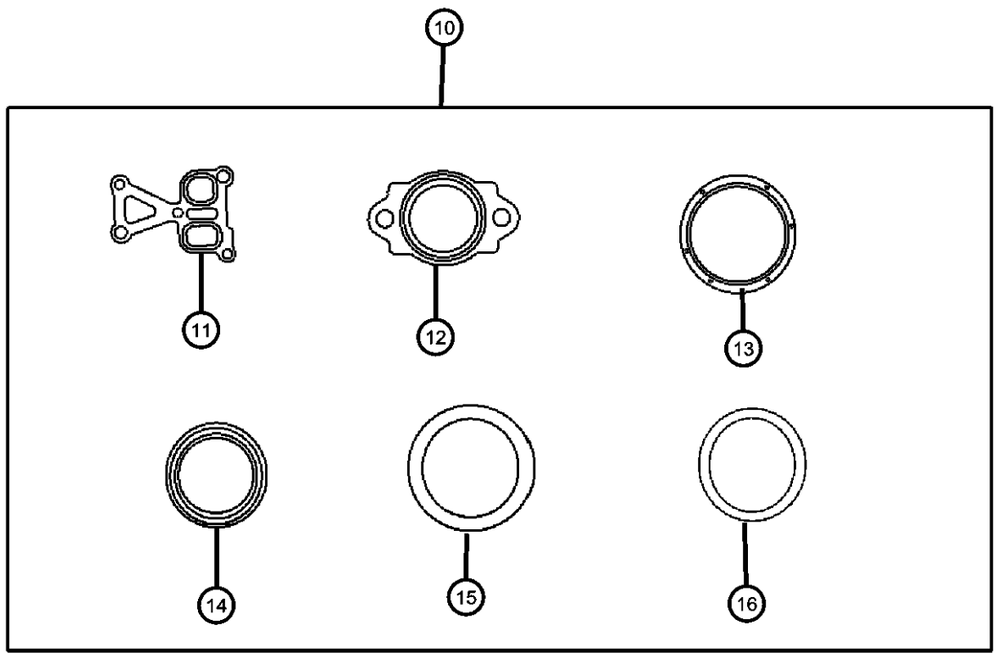

ITEM	PART NUMBER	QTY	LINE	SERIES	BODY	ENGINE	TRANS	TRIM	DESCRIPTION

NOTE:
Sales Codes:
[DAV] = Continuously Variable Transmission
[DEF] = 6-Speed Manual Aisian BG6 Transmission
[DE0] = All 6-Speed Manual Transmissions
[DD0] = All 5-Speed Manual Transmissions
[DD7] = 5-Speed Manual T355 Transmission
[ECD] = 2.0L 4 Cylinder DOHC Diesel 16 Valve Engine
[ED3] = 2.4L 4 Cylinder DOHC 16 Valve Duel VVT Engine
[ED0] = All 2.4L 4 Cylinder Gas Engines
[NAA] = Federal Emissions
[NAE] = California Emisssions
[NAS] = 50 States Emissions
[NA1] = Export Emissions

ITEM	PART NUMBER	QTY	LINE	SERIES	BODY	ENGINE	TRANS	TRIM	DESCRIPTION
1									GASKET PACKAGE, Engine Upper, Contains Items 2,3,4,5,6,7,8,9
	05189956AA	1	J, T, U			ED3			With [NHA]
		1	J, T, U			ED3			
2	04884762AA	1				ED3			GASKET, Cylinder Cover
3	1555A185	1							GASKET, Exhaust Manifold
4	04884550AB	1				ED3			GASKET, Intake Manifold
5	04884551AA	1				ED3			GASKET, Throttle Body
6	1028A025	1				ED3			FILTER, Continuous Variable Valve Timing
7	04884572AA	1				ED3			SEAL, Coolant Outlet Adapter
8	04884765AA	1				ED3			GASKET, Coil
9	05189976AA	1				ED3			GASKET PACKAGE, Cylinder Head, Contains Item 6
10									GASKET PACKAGE, Engine Lower, Contains Items 11,12, 13, 14, 15, 16
	05189957AA	1	J, T, U			ED3			
		1	J, T, U			ED3			With [NHA]
11	04884696AA	1				ED3			GASKET, Water Pump Outlet
12	04884703AA	1				ED3			GASKET, Water Inlet
13	2142125000	1				ED3			SEAL, Crankshaft Oil, Front
14	2144325000	1				ED3			SEAL, Rear Main Crankshaft

COMPASS/PATRIOT (MK)

SERIES	LINE	BODY	ENGINE	TRANSMISSION
H = HIGHLINE L = LOWLINE P = PREMIUM	J = JEEP - 4WD T = JEEP - 2WD	49 = HATCHBACK TYPE #2 74 = SPORT UTILITY 4-DR TYPE #4	ED3 = 2.4L 4 Cyl DOHC 16V Dual VVT Engine	DD7 = 5-Speed Manual T355 Transmission DEF = 6-Speed Manual Aisin BG6 Trans DAV = Continuously Variable Transmission DAW = Cont.Var. w/Off-Rd Crawl Ratio Trans

Gasket Packages 2.4L [ED3]
Figure 2.4L-120

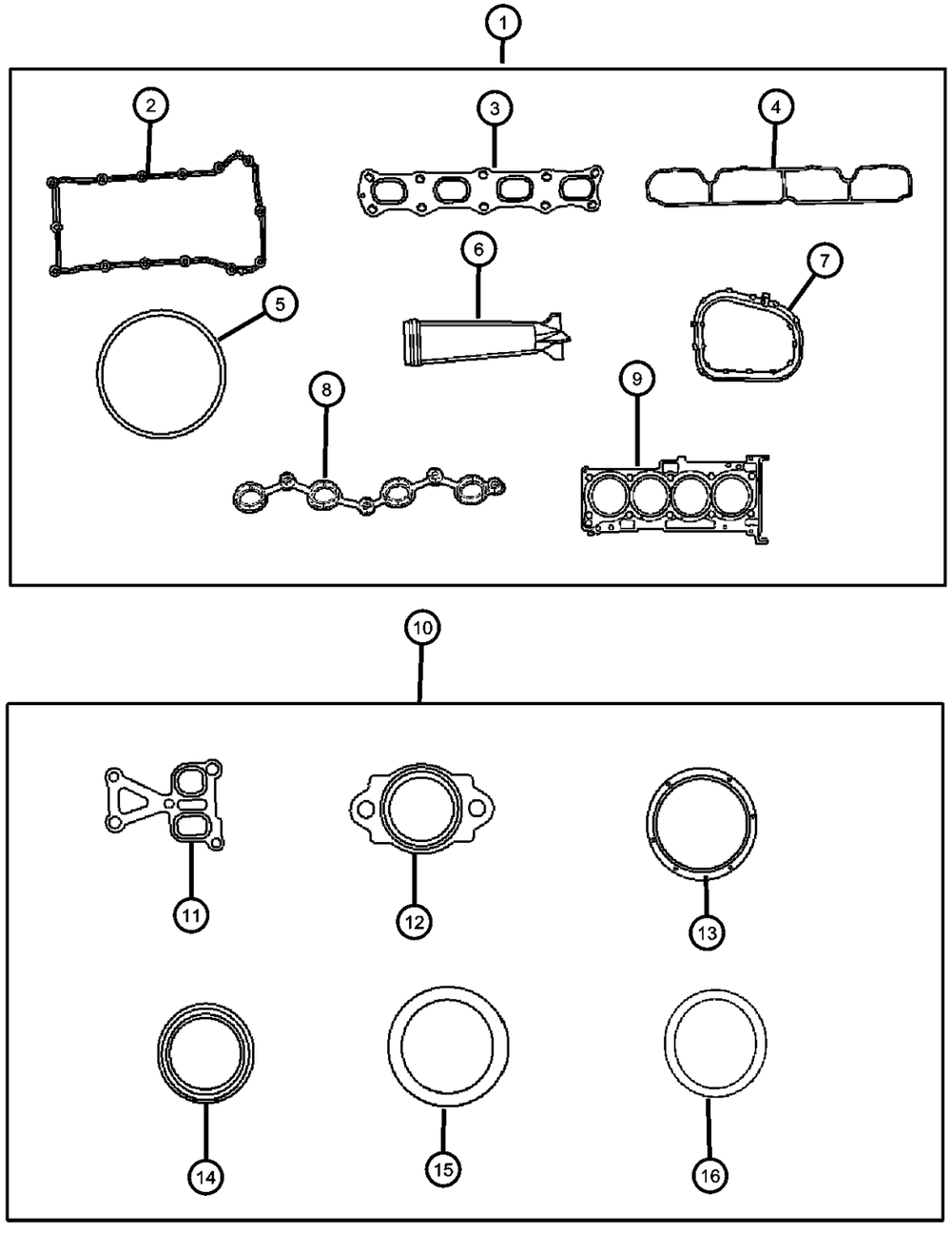

ITEM	PART NUMBER	QTY	LINE	SERIES	BODY	ENGINE	TRANS	TRIM	DESCRIPTION
15	04884873AA	1				ED3			O RING, Water Inlet Tube
16	04884873AA	1							O RING, Engine Oil Level Tube, Part # 2661423500, (NOT SERVICED)

COMPASS/PATRIOT (MK)

SERIES	LINE	BODY	ENGINE	TRANSMISSION
H = HIGHLINE L = LOWLINE P = PREMIUM	J = JEEP - 4WD T = JEEP - 2WD	49 = HATCHBACK TYPE #2 74 = SPORT UTILITY 4-DR TYPE #4	ED3 = 2.4L 4 Cyl DOHC 16V Dual VVT Engine	DD7 = 5-Speed Manual T355 Transmission DEF = 6-Speed Manual Aisin BG6 Trans DAV = Continuously Variable Transmission DAW = Cont.Var. w/Off-Rd Crawl Ratio Trans

AR = use ase required - = Non illustrrated part

Engine Cover And Components 2.4L [ED3]
Figure 2.4L-130

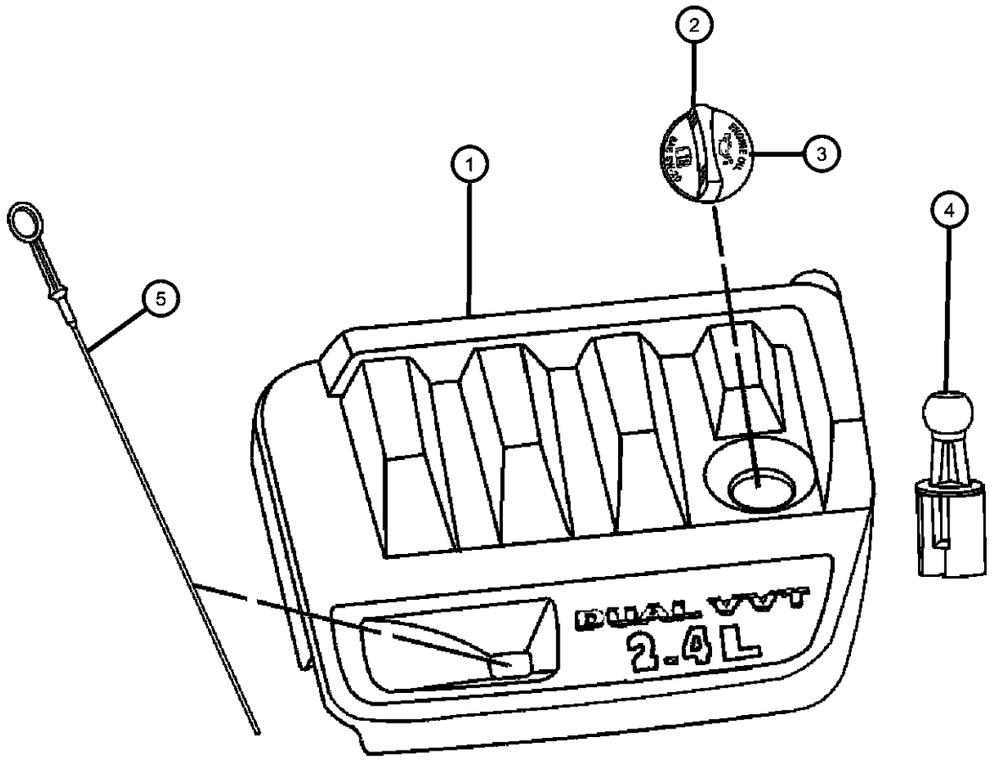

ITEM	PART NUMBER	QTY	LINE	SERIES	BODY	ENGINE	TRANS	TRIM	DESCRIPTION

NOTE:
Sales Codes:
[DAV] = Continuously Variable Transmission
[DEF] = 6-Speed Manual Aisian BG6 Transmission
[DE0] = All 6-Speed Manual Transmissions
[DD0] = All 5-Speed Manual Transmissions
[DD7] = 5-Speed Manual T355 Transmission
[ECD] = 2.0L 4 Cylinder DOHC Diesel 16 Valve Engine
[ED3] = 2.4L 4 Cylinder DOHC 16 Valve Duel VVT Engine
[ED0] = All 2.4L 4 Cylinder Gas Engines
[NAA] = Federal Emissions
[NAE] = California Emisssions
[NAS] = 50 States Emissions
[NA1] = Export Emissions

ITEM	PART NUMBER	QTY	LINE	SERIES	BODY	ENGINE	TRANS	TRIM	DESCRIPTION
1	04891689AA	1				ED3			COVER, Engine
2	04884739AA	1				ED3			CAP, Oil Filler, Includes O-ring
3									O RING
	68029299AA	1	J, T, U			ECN, ED3			Oil Filler Cap [49]
		1	J, T, U			ECN, ED3			Oil Filler Cap [74]
4	04891771AA	4				ED3			BALL STUD, Engine Cover To Valve Cover, Mounting
5	04884688AD	1				ED3			INDICATOR, Engine Oil Level

COMPASS/PATRIOT (MK)

SERIES	LINE	BODY	ENGINE	TRANSMISSION
H = HIGHLINE L = LOWLINE P = PREMIUM	J = JEEP - 4WD T = JEEP - 2WD	49 = HATCHBACK TYPE #2 74 = SPORT UTILITY 4-DR TYPE #4	ED3 = 2.4L 4 Cyl DOHC 16V Dual VVT Engine	DD7 = 5-Speed Manual T355 Transmission DEF = 6-Speed Manual Aisin BG6 Trans DAV = Continuously Variable Transmission DAW = Cont.Var. w/Off-Rd Crawl Ratio Trans

Cylinder Head Cover And Components 2.4L [ED3]
Figure 2.4L-210

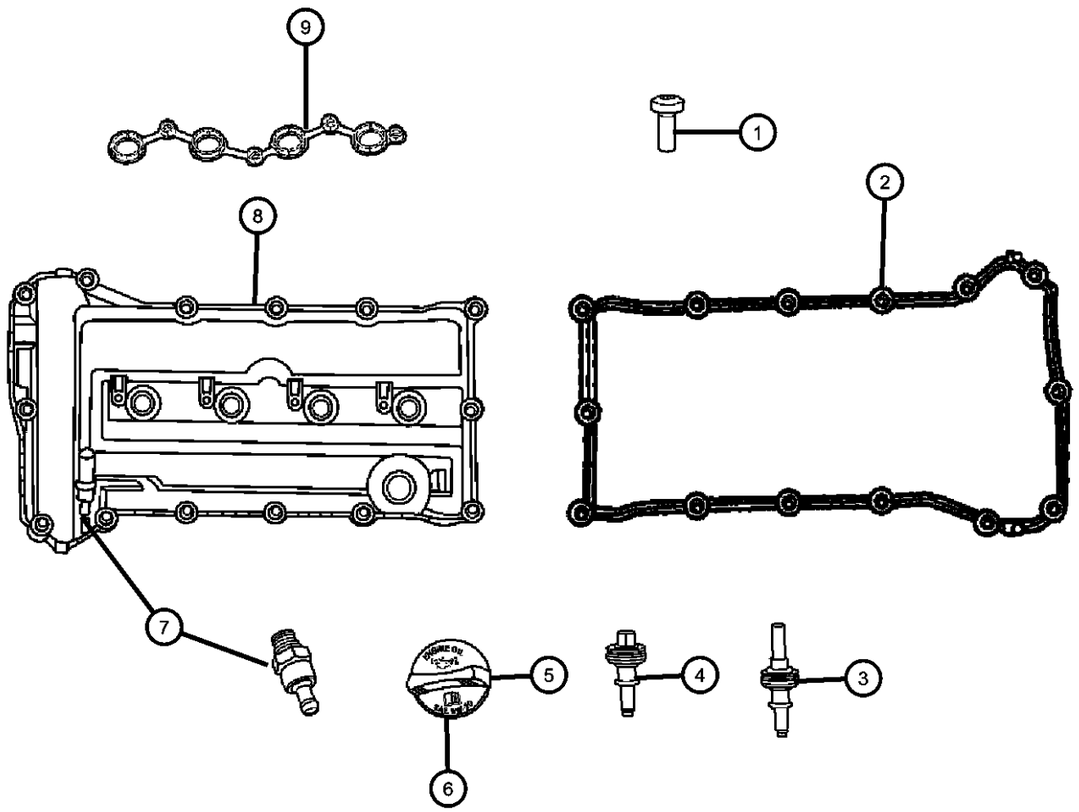

ITEM	PART NUMBER	QTY	LINE	SERIES	BODY	ENGINE	TRANS	TRIM	DESCRIPTION

NOTE:
Sales Codes:
[DAV] = Continuously Variable Transmission
[DEF] = 6-Speed Manual Aisian BG6 Transmission
[DE0] = All 6-Speed Manual Transmissions
[DD0] = All 5-Speed Manual Transmissions
[DD7] = 5-Speed Manual T355 Transmission
[ECD] = 2.0L 4 Cylinder DOHC Diesel 16 Valve Engine
[ED3] = 2.4L 4 Cylinder DOHC 16 Valve Duel VVT Engine
[ED0] = All 2.4L 4 Cylinder Gas Engines
[NAA] = Federal Emissions
[NAE] = California Emisssions
[NAS] = 50 States Emissions
[NA1] = Export Emissions

ITEM	PART NUMBER	QTY	LINE	SERIES	BODY	ENGINE	TRANS	TRIM	DESCRIPTION
1	06104142AA	4				ED3			SCREW, [M6X1.0X16.0], Ignition Coil To Cylinder Head Cover, Mounting
2	04884762AA	1				ED3			GASKET, Cylinder Cover
3	04884764AA	7				ED3			ISOLATOR, Cylinder Head Cover, Grommet And Bolt, [M6 X 1.0-6G]Mounting
4	04884763AA	11	J			ED3			ISOLATOR, Cylinder Head Cover, [M6 X 1.0-6G]Mounting
5	04884739AA	1				ED3			CAP, Oil Filler, Includes O-ring
6									O RING
	68029299AA	1	J, T, U			ED3, ECN			Oil Filler Cap [49]
		1	J, T, U			ECN, ED3			Oil Filler Cap [74]
7	05047002AA	1	J, T, U			ECN, ED3			VALVE, PCV
8	04884760AE	1	J, T, U			ED3			COVER, Cylinder Head
9	04884765AA	1				ED3			GASKET, Coil

COMPASS/PATRIOT (MK)

SERIES	LINE	BODY	ENGINE	TRANSMISSION
H = HIGHLINE L = LOWLINE P = PREMIUM	J = JEEP - 4WD T = JEEP - 2WD	49 = HATCHBACK TYPE #2 74 = SPORT UTILITY 4-DR TYPE #4	ED3 = 2.4L 4 Cyl DOHC 16V Dual VVT Engine	DD7 = 5-Speed Manual T355 Transmission DEF = 6-Speed Manual Aisin BG6 Trans DAV = Continuously Variable Transmission DAW = Cont.Var. w/Off-Rd Crawl Ratio Trans

Cylinder Head And Components 2.4L [ED3]
Figure 2.4L-220

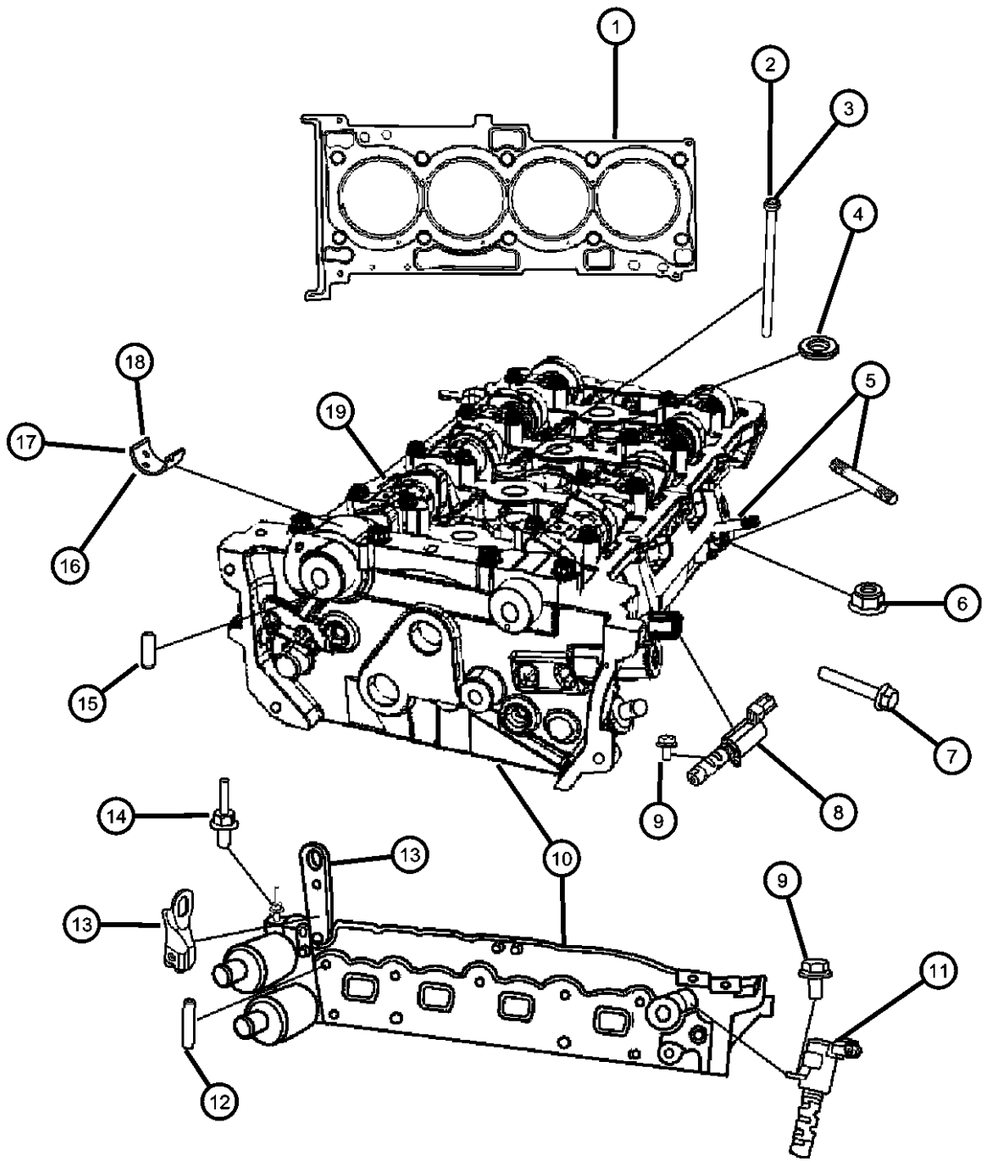

ITEM	PART NUMBER	QTY	LINE	SERIES	BODY	ENGINE	TRANS	TRIM	DESCRIPTION

NOTE:
Complete Cylinder Contains: Cylinder Head, Camshafts, Camshaft Bearings, Intake Valves, Exhaust Valves, Valve Stem Seals, Valve Retainers, V
Sales Codes:
[DAV] = Continuously Variable Transmission
[DEF] = 6-Speed Manual Aisian BG6 Transmission
[DE0] = All 6-Speed Manual Transmissions
[DD0] = All 5-Speed Manual Transmissions
[DD7] = 5-Speed Manual T355 Transmission
[ECD] = 2.0L 4 Cylinder DOHC Diesel 16 Valve Engine
[ED3] = 2.4L 4 Cylinder DOHC 16 Valve Duel VVT Engine
[ED0] = All 2.4L 4 Cylinder Gas Engines
[NAA] = Federal Emissions
[NAE] = California Emisssions
[NAS] = 50 States Emissions
[NA1] = Export Emissions

1	05189976AA	1				ED3			GASKET PACKAGE, Cylinder Head, See ILL 110 For Contents
2	04884889AA	8				ED3			BOLT, [M11X1.5X165MM], Cylinder Head To Engine Block, Mounting
3	04884888AA	8				ED3			BOLT, [M11X1.5X165MM], Cylinder Head To Engine Block, Mounting
4	1005A757	2				ED3			WASHER, Cylinder Head To Engine Block, Mounting
5	06102397AA	2				ED3			STUD, Double Ended, [M8X1.25X55.00], Intake Manifold To Cylinder Head, Mounting
6	06104716AA	3							NUT, [M8X1.25]Mounting
7	06104201AA	3				ED3			BOLT, [M8X1.25X45.0], Intake Manifold To Cylinder Head, Mounting
8	04884695AA	1				ED3			CONTROL VALVE, Oil Intake
9	1140306123	2				ED3			BOLT, [M6X12], Oil Control Valve To Cylinder Head, Mounting
10	04884469AD	1				ED3			HEAD, Cylinder, See Note
11	04884483AA	1				ED3			CONTROL VALVE, Oil Exhaust
12	2212538100	2				ED3			BOLT, [10X28], Exhaust Manifold To Cylinder Head, Mounting
13	04884752AC	1				ED3			BRACKET, Engine LiftRear
14	06508424AA	1				ED3			STUD, 2 End, M8X1.25X50.00, [M8X1.25X50.00], Rear Lift Hook To Cylinder Head, Mounting
15	06508424AA	1							PIN, Dowel, (NOT SERVICED)
16	1016A032	AR				ED3			BEARING, Camshaft, Size 1

COMPASS/PATRIOT (MK)

SERIES	LINE	BODY	ENGINE	TRANSMISSION
H = HIGHLINE L = LOWLINE P = PREMIUM	J = JEEP - 4WD T = JEEP - 2WD	49 = HATCHBACK TYPE #2 74 = SPORT UTILITY 4-DR TYPE #4	ED3 = 2.4L 4 Cyl DOHC 16V Dual VVT Engine	DD7 = 5-Speed Manual T355 Transmission DEF = 6-Speed Manual Aisin BG6 Trans DAV = Continuously Variable Transmission DAW = Cont.Var. w/Off-Rd Crawl Ratio Trans

AR = use ase required - = Non illustrrated part

Cylinder Head And Components 2.4L [ED3]
Figure 2.4L-220

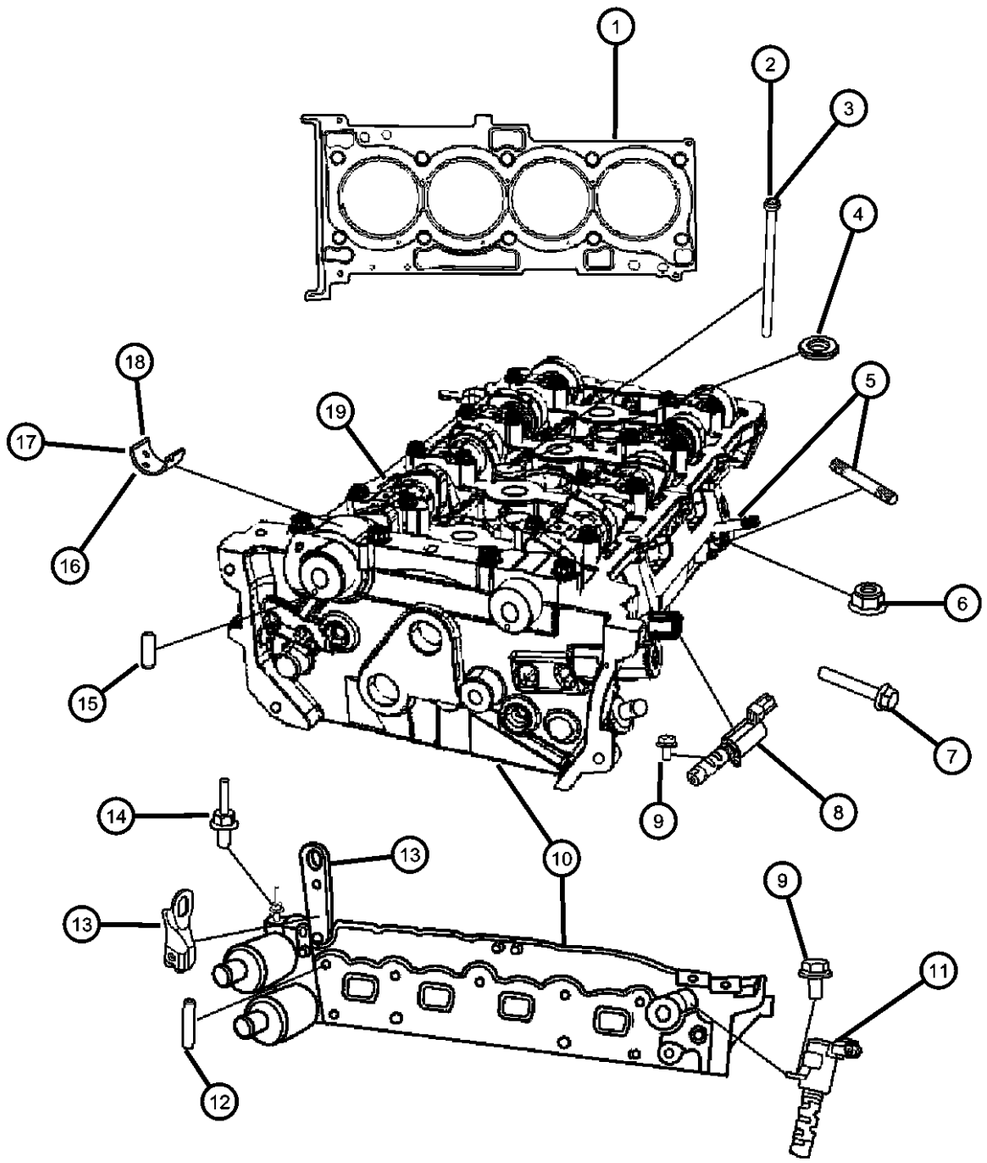

ITEM	PART NUMBER	QTY	LINE	SERIES	BODY	ENGINE	TRANS	TRIM	DESCRIPTION
17	1016A031	AR				ED3			BEARING, Camshaft, Size 2
18	1016A030	AR				ED3			BEARING, Camshaft, Size 3
19	1601110000	7				ED3			BALL, Main Oil Gallery

COMPASS/PATRIOT (MK)

SERIES	LINE	BODY	ENGINE	TRANSMISSION
H = HIGHLINE L = LOWLINE P = PREMIUM	J = JEEP - 4WD T = JEEP - 2WD	49 = HATCHBACK TYPE #2 74 = SPORT UTILITY 4-DR TYPE #4	ED3 = 2.4L 4 Cyl DOHC 16V Dual VVT Engine	DD7 = 5-Speed Manual T355 Transmission DEF = 6-Speed Manual Aisin BG6 Trans DAV = Continuously Variable Transmission DAW = Cont.Var. w/Off-Rd Crawl Ratio Trans

AR = use ase required - = Non illustrrated part

Engine Block And Components 2.4L [ED3]
Figure 2.4L-310

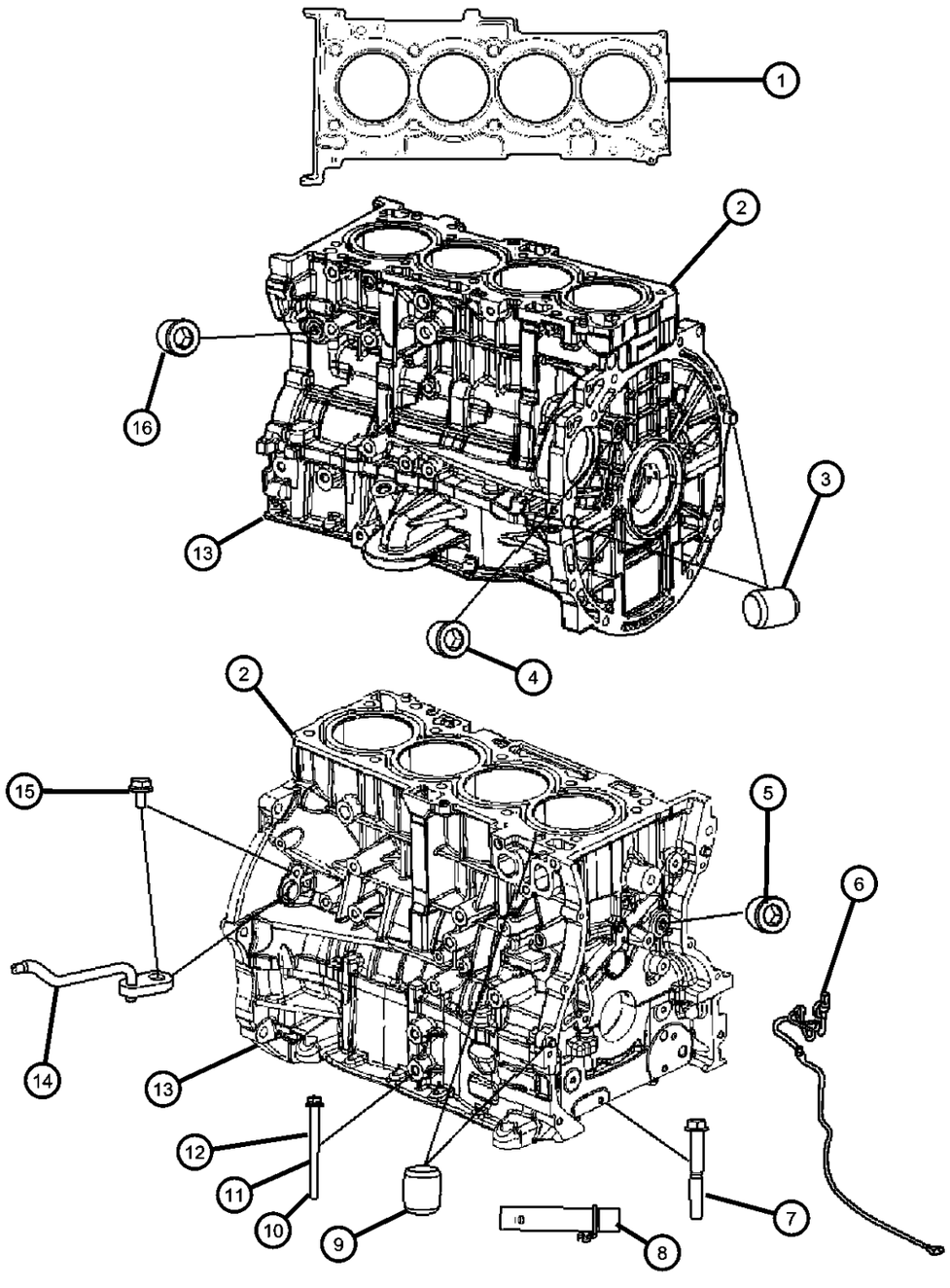

ITEM	PART NUMBER	QTY	LINE	SERIES	BODY	ENGINE	TRANS	TRIM	DESCRIPTION
NOTE:									
Short Block Contains: Crankshaft, Pistons, Connecting Rods, Piston Rings, Crankshaft Bearings, Connecting Rod Bearings, Sensor Target Wheel									
Sales Codes:									
[DAV] = Continuously Variable Transmission									
[DEF] = 6-Speed Manual Aisian BG6 Transmission									
[DE0] = All 6-Speed Manual Transmissions									
[DD0] = All 5-Speed Manual Transmissions									
[DD7] = 5-Speed Manual T355 Transmission									
[ECD] = 2.0L 4 Cylinder DOHC Diesel 16 Valve Engine									
[ED3] = 2.4L 4 Cylinder DOHC 16 Valve Duel VVT Engine									
[ED0] = All 2.4L 4 Cylinder Gas Engines									
[NAA] = Federal Emissions									
[NAE] = California Emisssions									
[NAS] = 50 States Emissions									
[NA1] = Export Emissions									
1									GASKET PACKAGE, Engine Lower, See ILL 110 For Contents
	05189957AA	1	J, T, U			ED3			
		1	J, T, U			ED3			With [NHA]
2	05183906AA	1				ED3			BLOCK, SHORT, See Note
3	04884783AA	2				ED3			PIN, Dowel, Engine Block To Transaxle, Mounting
4	04884701AA	2				ED3			PLUG, Main Oil Gallery
5	04884701AA	1				ED3			PLUG, Oil Feed To Chain Tensioner
6	05033279AA	1				ED3			CORD, Engine Block Heater
7	MN163822	10				ED3			BOLT, [M10X1.25X76], Main Bearing Cap To Engine Block, Mounting
8	05033557AB	1				ED3			HEATER, Engine
9									PIN, Dowel
	04884905AA	2				ED3			Engine Block To Timing Chain Cover, Mounting
		2				ED3			Engine block To Cylinder Head, Mounting
		2				ED3			Engine Block To Ladder, Mounting
10	2111825000	4				ED3			BOLT, [M8X1.25X55], Ladder Frame To Cylinder Block, Mounting
11	04884907AA	6				ED3			BOLT, [M8X1.25X103], Ladder Frame To Cylinder Block, Mounting
12	06508714AA	6				ED3			BOLT, [M8X1.25X104.00], Ladder Frame To Cylinder Block, Mounting

COMPASS/PATRIOT (MK)

SERIES	LINE	BODY	ENGINE	TRANSMISSION
H = HIGHLINE L = LOWLINE P = PREMIUM	J = JEEP - 4WD T = JEEP - 2WD	49 = HATCHBACK TYPE #2 74 = SPORT UTILITY 4-DR TYPE #4	ED3 = 2.4L 4 Cyl DOHC 16V Dual VVT Engine	DD7 = 5-Speed Manual T355 Transmission DEF = 6-Speed Manual Aisin BG6 Trans DAV = Continuously Variable Transmission DAW = Cont.Var. w/Off-Rd Crawl Ratio Trans

Engine Block And Components 2.4L [ED3]
Figure 2.4L-310

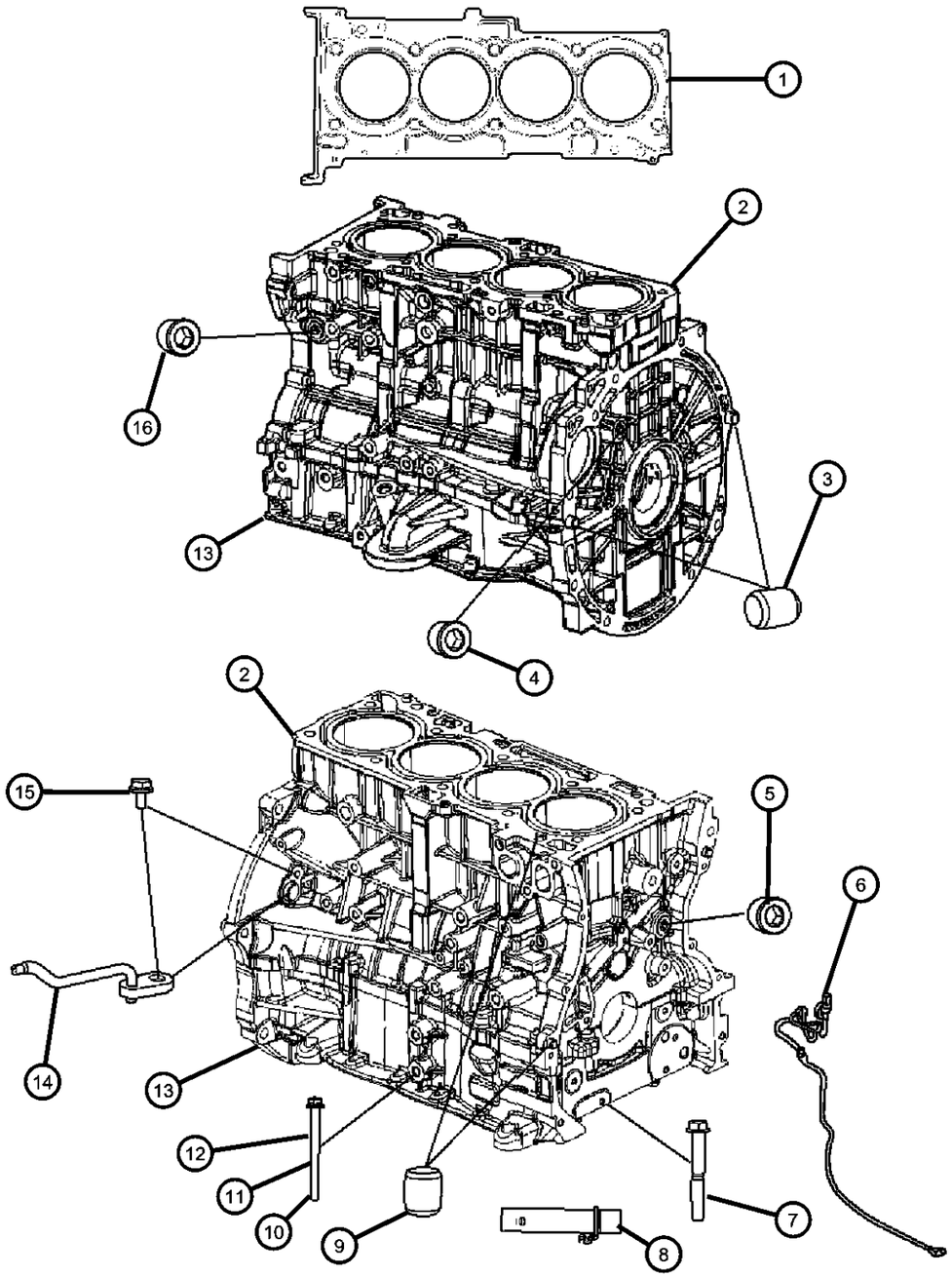

ITEM	PART NUMBER	QTY	LINE	SERIES	BODY	ENGINE	TRANS	TRIM	DESCRIPTION
13	06508714AA	6							BEDPLATE, Serviced With Shortblock Only, (NOT SERVICED)
14	04884767AA	1				ED3			INJECTOR, Oil
15	1140306123	1				ED3			BOLT, [M6X12], Oil Injector To Cyinder Block, Mounting
16	04884782AA	1				ED3			PLUG, Cylinder Block, [M14 X 1.5], Engine Block Water Jacket Drain

COMPASS/PATRIOT (MK)

SERIES	LINE	BODY	ENGINE	TRANSMISSION
H = HIGHLINE L = LOWLINE P = PREMIUM	J = JEEP - 4WD T = JEEP - 2WD	49 = HATCHBACK TYPE #2 74 = SPORT UTILITY 4-DR TYPE #4	ED3 = 2.4L 4 Cyl DOHC 16V Dual VVT Engine	DD7 = 5-Speed Manual T355 Transmission DEF = 6-Speed Manual Aisin BG6 Trans DAV = Continuously Variable Transmission DAW = Cont.Var. w/Off-Rd Crawl Ratio Trans

Crankshaft Pistons And Driveplate 2.4L [ED3]
Figure 2.4L-410

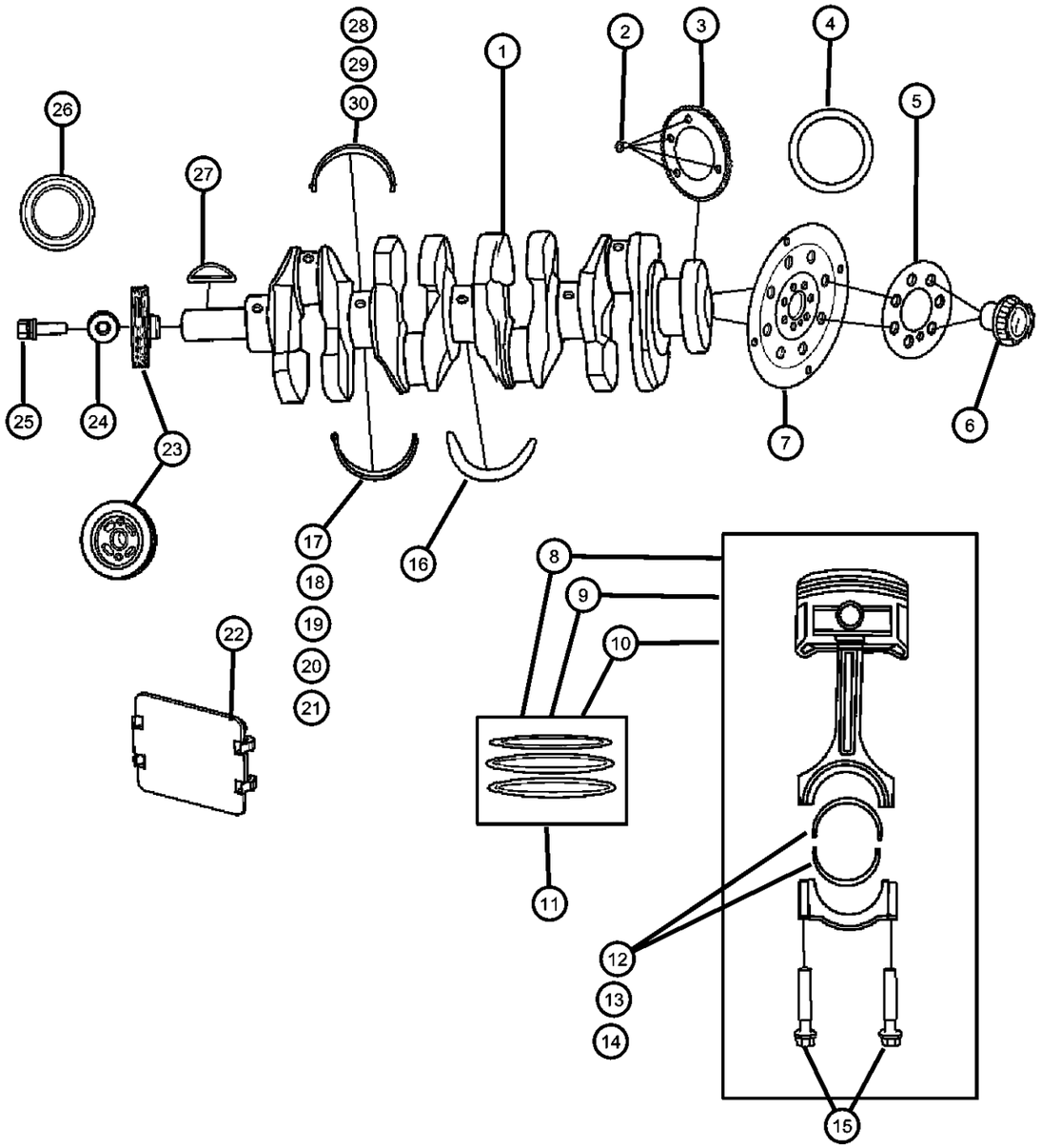

ITEM	PART NUMBER	QTY	LINE	SERIES	BODY	ENGINE	TRANS	TRIM	DESCRIPTION
NOTE: Sales Codes: [DAV] = Continuously Variable Transmission [DEF] = 6-Speed Manual Aisian BG6 Transmission [DE0] = All 6-Speed Manual Transmissions [DD0] = All 5-Speed Manual Transmissions [DD7] = 5-Speed Manual T355 Transmission [ECD] = 2.0L 4 Cylinder DOHC Diesel 16 Valve Engine [ED3] = 2.4L 4 Cylinder DOHC 16 Valve Duel VVT Engine [ED0] = All 2.4L 4 Cylinder Gas Engines [NAA] = Federal Emissions [NAE] = California Emisssions [NAS] = 50 States Emissions [NA1] = Export Emissions									
1	04884563AC	1				ED3			CRANKSHAFT
2	3919137100	4				ED3			BOLT, [M6X1.0X14], Reluctor Wheel To Crankshaft, Mounting
3	3919025000	1				ED3			RELUCTOR WHEEL, Crankshaft
4	2144325000	1				ED3			SEAL, Rear Main Crankshaft
5	04736477AA	1					DAV, DD7		BACKING PLATE
6	05189932AA	1				ED3			BOLT PACKAGE, Driveplate To Crankshaft, [M12 X 1.25], Driveplate to Crankshaft Package Of 7, Mounting
7	04736238AA	1					DAV, DD7		PLATE, Torque Converter Drive
8	05191340AA	AR				ED3			PISTON PIN AND ROD, A-Size
9	05191341AA	AR				ED3			PISTON PIN AND ROD, B-Size
10	05191342AA	AR				ED3			PISTON PIN AND ROD, C-Size
11	05191424AA	1				ED3			PISTON RING SET, COMPLETE ENGINE, STD.
12	1115A150	AR				ED3			BEARING, Connecting Rod, STD.
13	1115A149	AR				ED3			BEARING, Connecting Rod, -3 Micron
14	1115A151	AR				ED3			BEARING, Connecting Rod, +3 Micron
15	MN195112	8				ED3			BOLT, Connecting Rod, [M8 X 1.25], Connecting Rod To Cap, Mounting
16									BEARING, Crankshaft Thrust
	04884910AA	2	J, T, U			ECN, ED3			Used On vechiles Built On 6-21-2006 And After

COMPASS/PATRIOT (MK)

SERIES	LINE	BODY	ENGINE	TRANSMISSION
H = HIGHLINE L = LOWLINE P = PREMIUM	J = JEEP - 4WD T = JEEP - 2WD	49 = HATCHBACK TYPE #2 74 = SPORT UTILITY 4-DR TYPE #4	ED3 = 2.4L 4 Cyl DOHC 16V Dual VVT Engine	DD7 = 5-Speed Manual T355 Transmission DEF = 6-Speed Manual Aisin BG6 Trans DAV = Continuously Variable Transmission DAW = Cont.Var. w/Off-Rd Crawl Ratio Trans

AR = use ase required - = Non illustrrated part

Crankshaft Pistons And Driveplate 2.4L [ED3]
Figure 2.4L-410

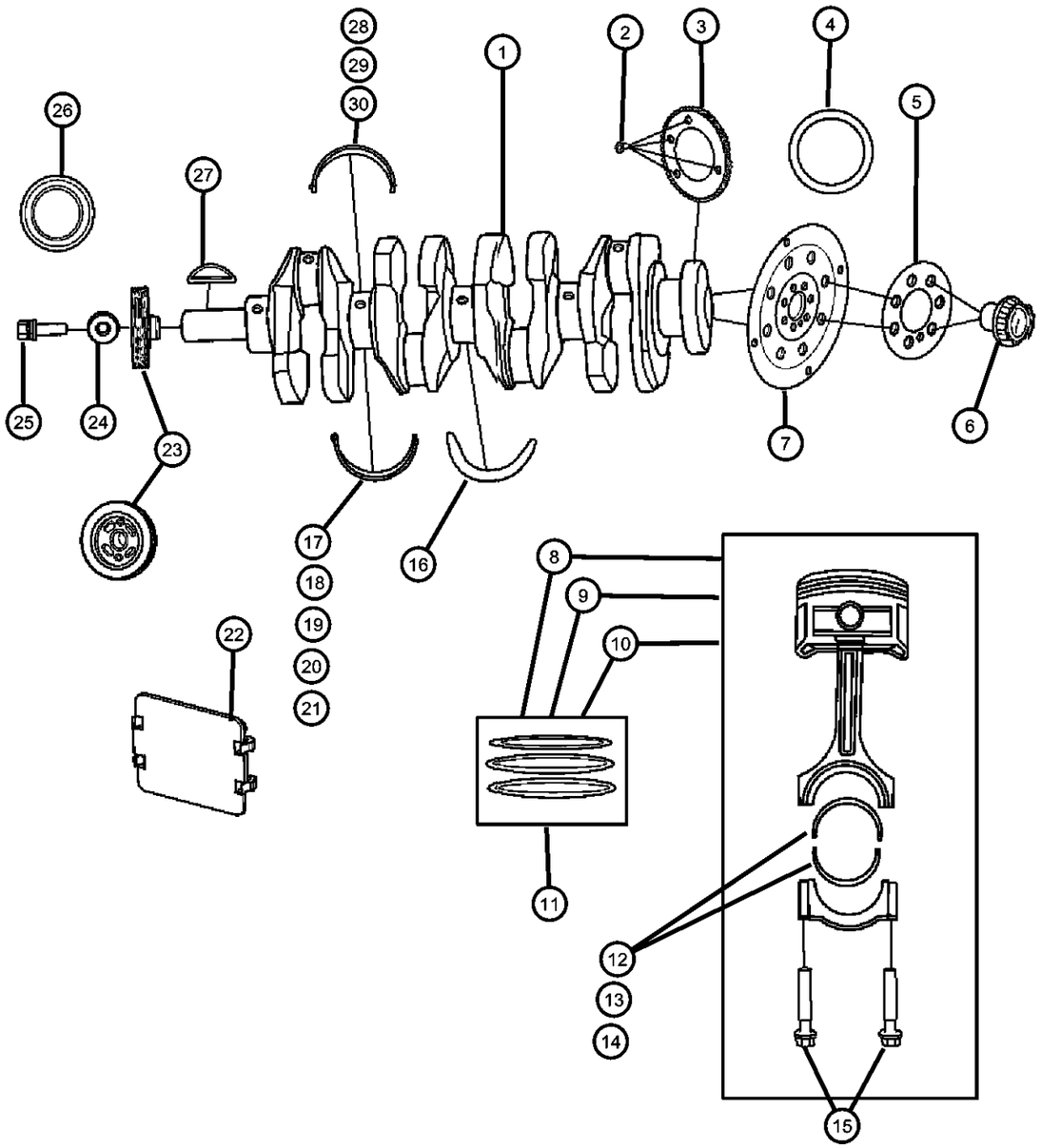

ITEM	PART NUMBER	QTY	LINE	SERIES	BODY	ENGINE	TRANS	TRIM	DESCRIPTION
		2	J, T, U			ECN, ED3			Used On vechiles Built On 6-21-2006 And After [74]
	MN176556	2				ED3			Used On Vechiles Built Up To And Including 6-20-2006
17	1052A540	AR				ED3			BEARING, Crankshaft Lower, Standard
18	1052A539	AR				ED3			BEARING, Crankshaft Lower, -3 Micron
19	1052A541	AR				ED3			BEARING, Crankshaft Lower, +3 Micron
20	1052A538	AR				ED3			BEARING, Crankshaft Lower, -6 Micron
21	1052A542	AR				ED3			BEARING, Crankshaft Lower, +6 Micron
22	04884904AA	1				ED3			COVER
23	2312425000	1				ED3			DAMPER, Crankshaft
24	04884877AB	1				ED3			WASHER, Dampner Pulley To Crankshaft, Mounting
25	1101A022	1				ED3			BOLT, [M14X1.5X62], Dampner Pulley To Crankshaft, Mounting
26	2142125000	1				ED3			SEAL, Crankshaft Oil, Front
27	04884923AA	1				ED3			KEY, Crankshaft Sprocket
28	1052A536	AR				ED3			BEARING, Crankshaft Upper, Standard
29	1052A535	AR				ED3			BEARING, Crankshaft Upper, -6 Micron
30	1052A537	AR				ED3			BEARING, Crankshaft Upper, +6 Micron

COMPASS/PATRIOT (MK)

SERIES	LINE	BODY	ENGINE	TRANSMISSION
H = HIGHLINE L = LOWLINE P = PREMIUM	J = JEEP - 4WD T = JEEP - 2WD	49 = HATCHBACK TYPE #2 74 = SPORT UTILITY 4-DR TYPE #4	ED3 = 2.4L 4 Cyl DOHC 16V Dual VVT Engine	DD7 = 5-Speed Manual T355 Transmission DEF = 6-Speed Manual Aisin BG6 Trans DAV = Continuously Variable Transmission DAW = Cont.Var. w/Off-Rd Crawl Ratio Trans

AR = use ase required - = Non illustrrated part

Camshafts And Valves 2.4L [ED3]
Figure 2.4L-510

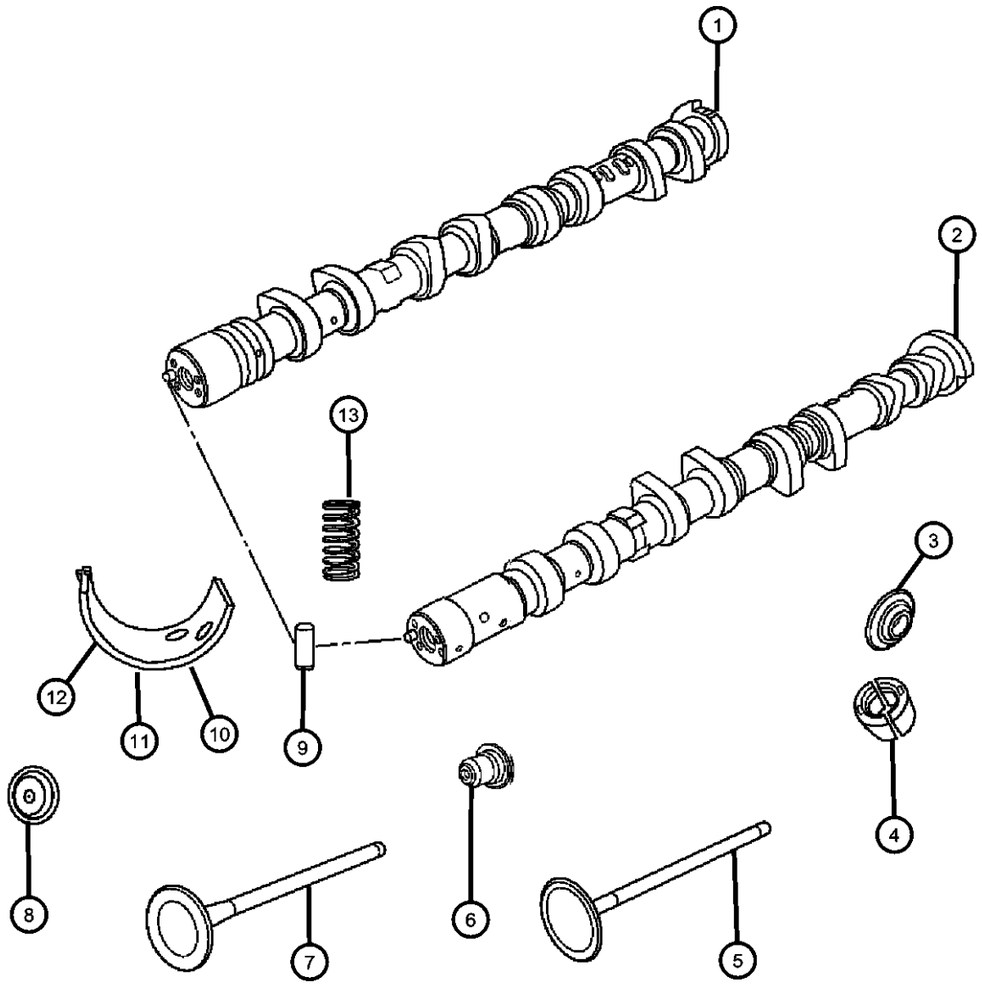

ITEM	PART NUMBER	QTY	LINE	SERIES	BODY	ENGINE	TRANS	TRIM	DESCRIPTION

NOTE:
Solid Bucket Tappets Thickness Is Stamped On Inside Of Bucket.
Sales Codes:
[DAV] = Continuously Variable Transmission
[DEF] = 6-Speed Manual Aisian BG6 Transmission
[DE0] = All 6-Speed Manual Transmissions
[DD0] = All 5-Speed Manual Transmissions
[DD7] = 5-Speed Manual T355 Transmission
[ECD] = 2.0L 4 Cylinder DOHC Diesel 16 Valve Engine
[ED3] = 2.4L 4 Cylinder DOHC 16 Valve Duel VVT Engine
[ED0] = All 2.4L 4 Cylinder Gas Engines
[NAA] = Federal Emissions
[NAE] = California Emisssions
[NAS] = 50 States Emissions
[NA1] = Export Emissions

1	04884736AB	1				ED3			CAMSHAFT, Exhaust
2	04884735AB	1				ED3			CAMSHAFT, Intake
3	04884725AA	16				ED3			RETAINER, Valve Spring
4	04884726AA	32				ED3			LOCK, Valve Spring Retainer
5	MN187696	8				ED3			VALVE, Engine Intake
6	2222425000	16				ED3			SEAL, Valve Guide
7	MN183950	8				ED3			VALVE, Engine Exhaust
8									TAPPET, Valve, See Note
	04884594AN	AR				ED3			3.195 Millimeters
	04884594AQ	AR				ED3			3.24 Millimeters
	04884594AT	AR				ED3			3.285 Millimeters
	04884594AB	AR				ED3			3.015 Millimeters
	04884594AE	AR				ED3			3.06 Millimeters
	04884594AH	AR				ED3			3.105 Millimeters
	04884594AK	AR				ED3			3.15 Millimeters
	04884594AW	AR				ED3			3.33 Millimeters
	04884594AZ	AR				ED3			3.375 Millimeters
	04884594BC	AR				ED3			3.42 Milllimeters
	04884594BF	AR				ED3			3.465 Millimeters
	04884594BI	AR				ED3			3.51 Millimeters
	04884594BL	AR				ED3			3.555 Millimeters
	04884594BO	AR				ED3			3.600 Millimeters

COMPASS/PATRIOT (MK)

SERIES	LINE	BODY	ENGINE	TRANSMISSION
H = HIGHLINE L = LOWLINE P = PREMIUM	J = JEEP - 4WD T = JEEP - 2WD	49 = HATCHBACK TYPE #2 74 = SPORT UTILITY 4-DR TYPE #4	ED3 = 2.4L 4 Cyl DOHC 16V Dual VVT Engine	DD7 = 5-Speed Manual T355 Transmission DEF = 6-Speed Manual Aisin BG6 Trans DAV = Continuously Variable Transmission DAW = Cont.Var. w/Off-Rd Crawl Ratio Trans

AR = use ase required - = Non illustrrated part

Camshafts And Valves 2.4L [ED3]
Figure 2.4L-510

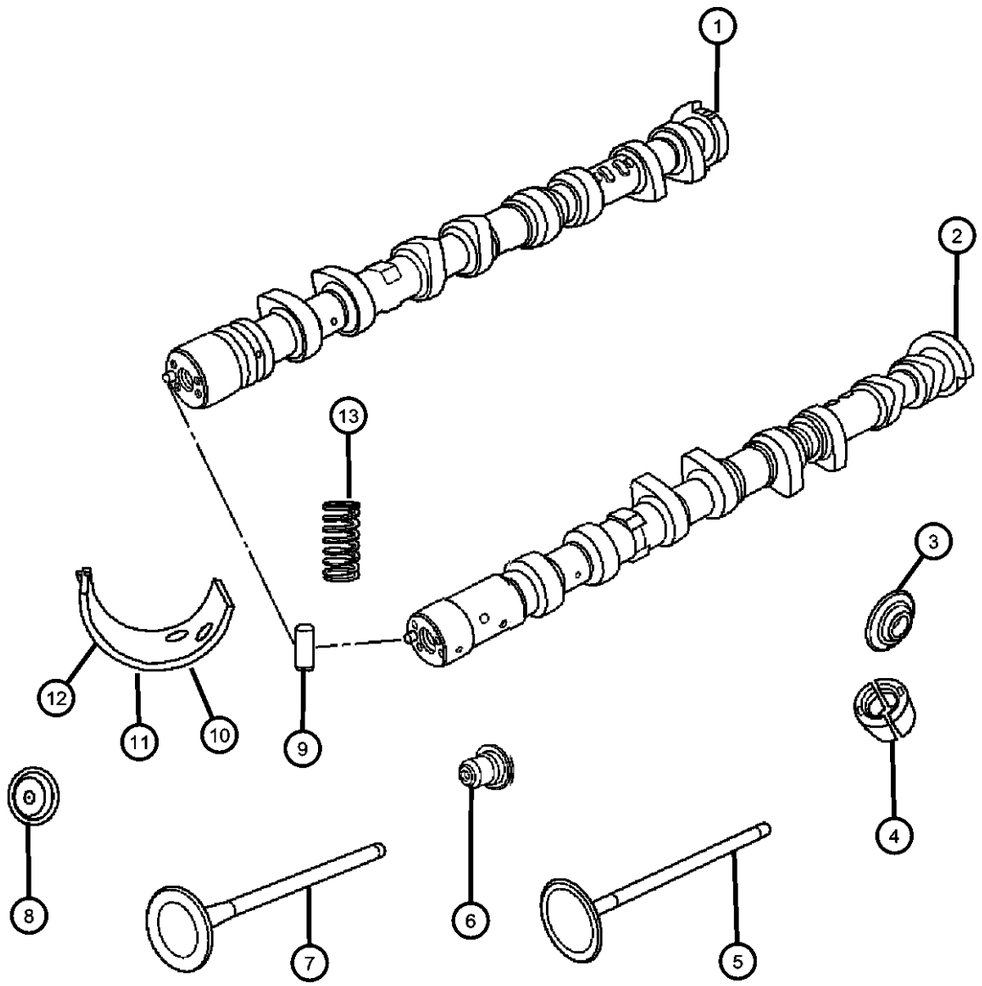

ITEM	PART NUMBER	QTY	LINE	SERIES	BODY	ENGINE	TRANS	TRIM	DESCRIPTION
	04884594BR	AR				ED3			3.645 Millimeters
	04884594BU	AR				ED3			3.690 Millimeters
9	04884594BU	AR							PIN, Dowel, (NOT SERVICED),
10	1016A032	AR				ED3			BEARING, Camshaft, Size 1
11	1016A031	AR				ED3			BEARING, Camshaft, Size 2
12	1016A030	AR				ED3			BEARING, Camshaft, Size 3
13	04884804AA	16				ED3			SPRING, Valve

COMPASS/PATRIOT (MK)

SERIES	LINE	BODY	ENGINE	TRANSMISSION
H = HIGHLINE L = LOWLINE P = PREMIUM	J = JEEP - 4WD T = JEEP - 2WD	49 = HATCHBACK TYPE #2 74 = SPORT UTILITY 4-DR TYPE #4	ED3 = 2.4L 4 Cyl DOHC 16V Dual VVT Engine	DD7 = 5-Speed Manual T355 Transmission DEF = 6-Speed Manual Aisin BG6 Trans DAV = Continuously Variable Transmission DAW = Cont.Var. w/Off-Rd Crawl Ratio Trans

AR = use ase required - = Non illustrrated part

Timing Chain And Cover 2.4L [ED3]
Figure 2.4L-610

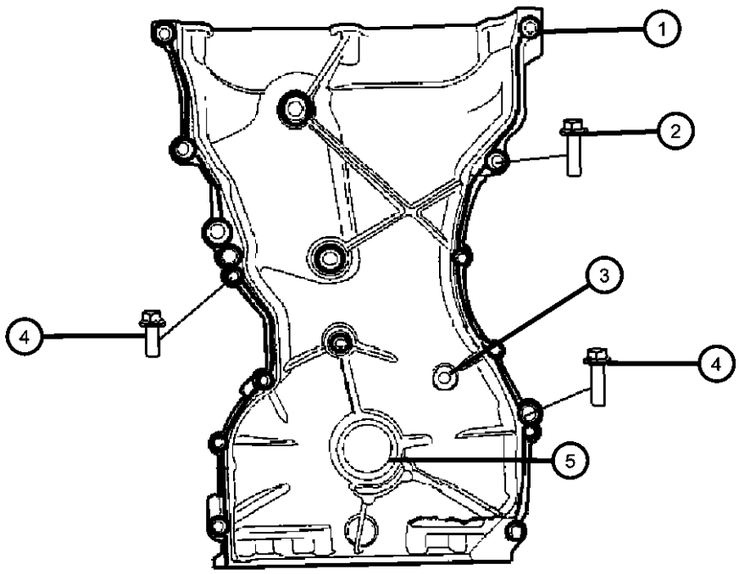

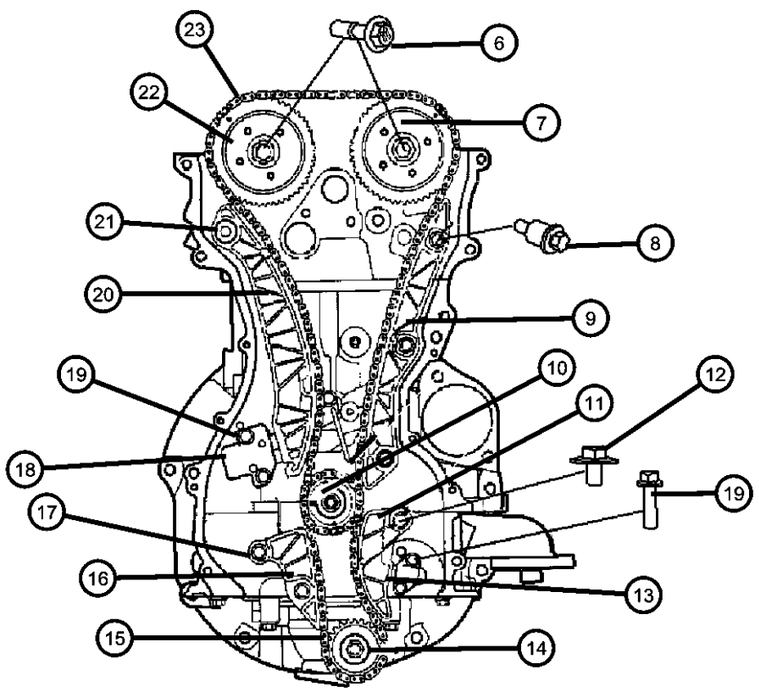

ITEM	PART NUMBER	QTY	LINE	SERIES	BODY	ENGINE	TRANS	TRIM	DESCRIPTION

NOTE:
Sales Codes:
[DAV] = Continuously Variable Transmission
[DEF] = 6-Speed Manual Aisian BG6 Transmission
[DE0] = All 6-Speed Manual Transmissions
[DD0] = All 5-Speed Manual Transmissions
[DD7] = 5-Speed Manual T355 Transmission
[ECD] = 2.0L 4 Cylinder DOHC Diesel 16 Valve Engine
[ED3] = 2.4L 4 Cylinder DOHC 16 Valve Duel VVT Engine
[ED0] = All 2.4L 4 Cylinder Gas Engines
[NAA] = Federal Emissions
[NAE] = California Emisssions
[NAS] = 50 States Emissions
[NA1] = Export Emissions

ITEM	PART NUMBER	QTY	LINE	SERIES	BODY	ENGINE	TRANS	TRIM	DESCRIPTION
1	04884895AA	1				ED3			COVER, Chain Case, Contains 3,5
2	04884895AA	1							BOLT, BOLT-FLANGE, [M6X25], (NOT SERVICED)
3	06102258AA	1				ED3			PLUG, Access Hole, Timing Chain Tensioner Access
4	1140308283	6	J			ED3			BOLT, BOLT, [M8X28], Timing Chain Cover To Engine Block, Mounting
5	2142125000	1				ED3			SEAL, Crankshaft Oil, Front
6	2436125000	2				ED3			BOLT, Sprocket To Camshaft, Mounting
7	04884482AB	1				ED3			PHASER, CamshaftExhaust
8	2434825000	3	J			ED3			BOLT, Timing Chain Guide Fixed To Engine Block, Mounting
9	2443125000	1				ED3			GUIDE, Timing Chain, Fixed
10	04884587AA	1				ED3			SPROCKET, Crankshaft
11	04884588AA	1				ED3			TENSIONER ARM, Balance Shaft Driver
12	2438825000	1				ED3			BOLT, Balanceshaft Chain Arm To Ladder, Mounting
13	04884876AA	1				ED3			TENSIONER, Chain, Balance Shaft Chain, Secondary
14	04884876AA	1							SPROCKET, Drive, Serviced With Oil Pump, (NOT SERVICED)
15	04884870AB	1	J, T, U			ED3			CHAIN, Balance Shaft
16	04884589AA	1				ED3			GUIDE, Balance Shaft Chain
17	2434825000	2				ED3			BOLT, Balance Shaft Chain Guide, Mounting
18	2441025000	1				ED3			TENSIONER, ChainPrimary

COMPASS/PATRIOT (MK)

SERIES	LINE	BODY	ENGINE	TRANSMISSION
H = HIGHLINE L = LOWLINE P = PREMIUM	J = JEEP - 4WD T = JEEP - 2WD	49 = HATCHBACK TYPE #2 74 = SPORT UTILITY 4-DR TYPE #4	ED3 = 2.4L 4 Cyl DOHC 16V Dual VVT Engine	DD7 = 5-Speed Manual T355 Transmission DEF = 6-Speed Manual Aisin BG6 Trans DAV = Continuously Variable Transmission DAW = Cont.Var. w/Off-Rd Crawl Ratio Trans

AR = use ase required - = Non illustrrated part

Timing Chain And Cover 2.4L [ED3]
Figure 2.4L-610

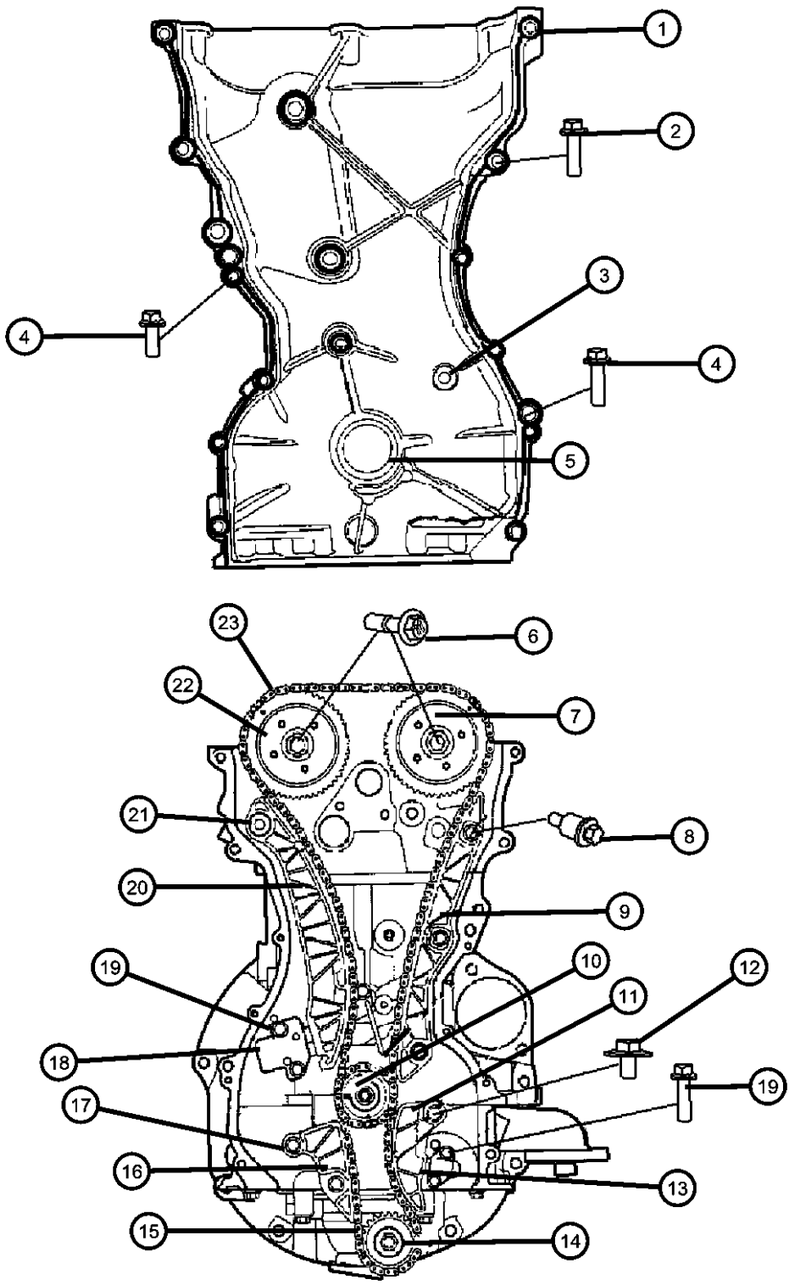

ITEM	PART NUMBER	QTY	LINE	SERIES	BODY	ENGINE	TRANS	TRIM	DESCRIPTION
19	2441025000	1							BOLT, [M6X25] Service #1140306253, (NOT SERVICED)
20	2442025000	1				ED3			TENSIONER ARM, Pivot
21	2434925000	1				ED3			BOLT, Timing Chain Guide Piviot To Cylinder Head, Mounting
22	04884713AC	1				ED3			PHASER, CamshaftIntake
23	04884868AB	1				ED3			CHAIN, TimingPrimary

COMPASS/PATRIOT (MK)

SERIES	LINE	BODY	ENGINE	TRANSMISSION
H = HIGHLINE L = LOWLINE P = PREMIUM	J = JEEP - 4WD T = JEEP - 2WD	49 = HATCHBACK TYPE #2 74 = SPORT UTILITY 4-DR TYPE #4	ED3 = 2.4L 4 Cyl DOHC 16V Dual VVT Engine	DD7 = 5-Speed Manual T355 Transmission DEF = 6-Speed Manual Aisin BG6 Trans DAV = Continuously Variable Transmission DAW = Cont.Var. w/Off-Rd Crawl Ratio Trans

Engine Oiling Pump, Balance Shaft And Oil Filter 2.4L [ED3]
Figure 2.4L-710

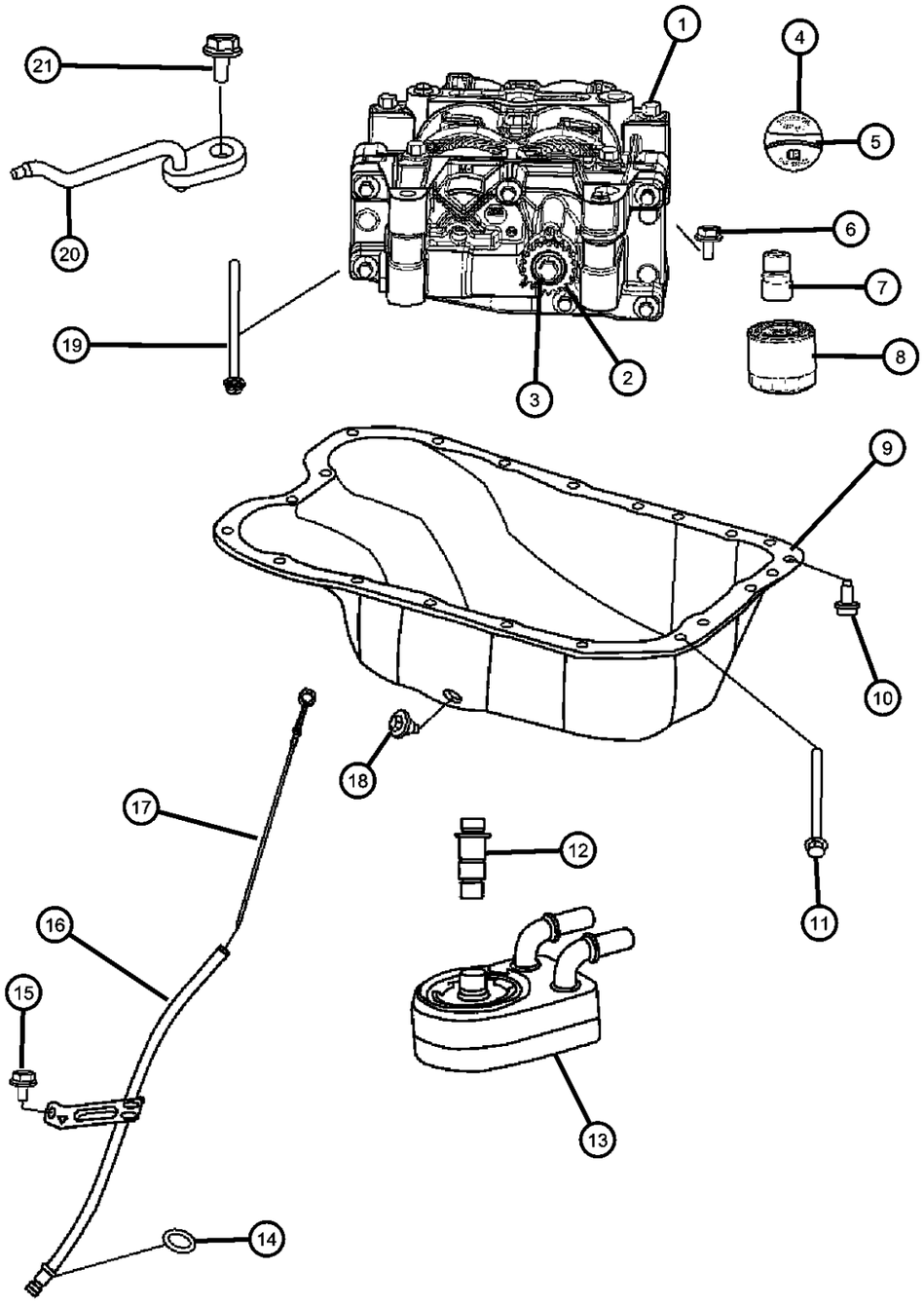

ITEM	PART NUMBER	QTY	LINE	SERIES	BODY	ENGINE	TRANS	TRIM	DESCRIPTION

NOTE:
Sales Codes:
[DAV] = Continuously Variable Transmission
[DEF] = 6-Speed Manual Aisian BG6 Transmission
[DE0] = All 6-Speed Manual Transmissions
[DD0] = All 5-Speed Manual Transmissions
[DD7] = 5-Speed Manual T355 Transmission
[ECD] = 2.0L 4 Cylinder DOHC Diesel 16 Valve Engine
[ED3] = 2.4L 4 Cylinder DOHC 16 Valve Duel VVT Engine
[ED0] = All 2.4L 4 Cylinder Gas Engines
[NAA] = Federal Emissions
[NAE] = California Emisssions
[NAS] = 50 States Emissions
[NA1] = Export Emissions

ITEM	PART NUMBER	QTY	LINE	SERIES	BODY	ENGINE	TRANS	TRIM	DESCRIPTION
1	05189868AA	1				ED3			SHAFT PACKAGE, Balance with Oil Pump, Includes Mounting Bolts
2	05189868AA	1							SPROCKET, Drive, Serviced With Oil Pump, (NOT SERVICED)
3	05189868AA	1							BOLT, BOLT, Serviced With Oil Pump, (NOT SERVICED)
4	04884739AA	1				ED3			CAP, Oil Filler, Includes O-ring
5									O RING
	68029299AA	1	J, T, U			ECN, ED3			Oil Filler Cap [49]
		1	J, T, U			ECN, ED3			Oil Filler Cap [74]
6	06508618AA	4				ED3			BOLT, [M8X1.25X180.00], Oil Pump To Engine Block, Mounting
7	04884902AA	1				ED3			CONNECTOR, Oil Filter, [M20 / M22], Without [NHA] Oil Cooler, Mounting
8	04884900AB	1				ED3			FILTER, Engine Oil
9	04884665AD	1				ED3			PAN, Oil
10	2151635000	16	J			ED3			BOLT, BOLT, [M6X13], Oil Pan To Ladder Frame, Mounting
11	06508714AA	6				ED3			BOLT, [M8X1.25X104.00], Oil Pan To Ladder Frame, Mounting
12	04884758AB	1	J, T, U			ED3			CONNECTOR, Engine Oil Cooler
13	04884757AD	1				ED3			COOLER, Engine Oil
14	04884757AD	1							O RING, Engine Oil Level Tube, Serviced With Indicator Tube. O-Ring Part # 2661423500, (NOT SERVICED)
15	1140306103	1				ED3			BOLT, [M6X10], Indicator Tube To Engine Block, Mounting

COMPASS/PATRIOT (MK)

SERIES	LINE	BODY	ENGINE	TRANSMISSION
H = HIGHLINE L = LOWLINE P = PREMIUM	J = JEEP - 4WD T = JEEP - 2WD	49 = HATCHBACK TYPE #2 74 = SPORT UTILITY 4-DR TYPE #4	ED3 = 2.4L 4 Cyl DOHC 16V Dual VVT Engine	DD7 = 5-Speed Manual T355 Transmission DEF = 6-Speed Manual Aisin BG6 Trans DAV = Continuously Variable Transmission DAW = Cont.Var. w/Off-Rd Crawl Ratio Trans

Engine Oiling Pump, Balance Shaft And Oil Filter 2.4L [ED3]
Figure 2.4L-710

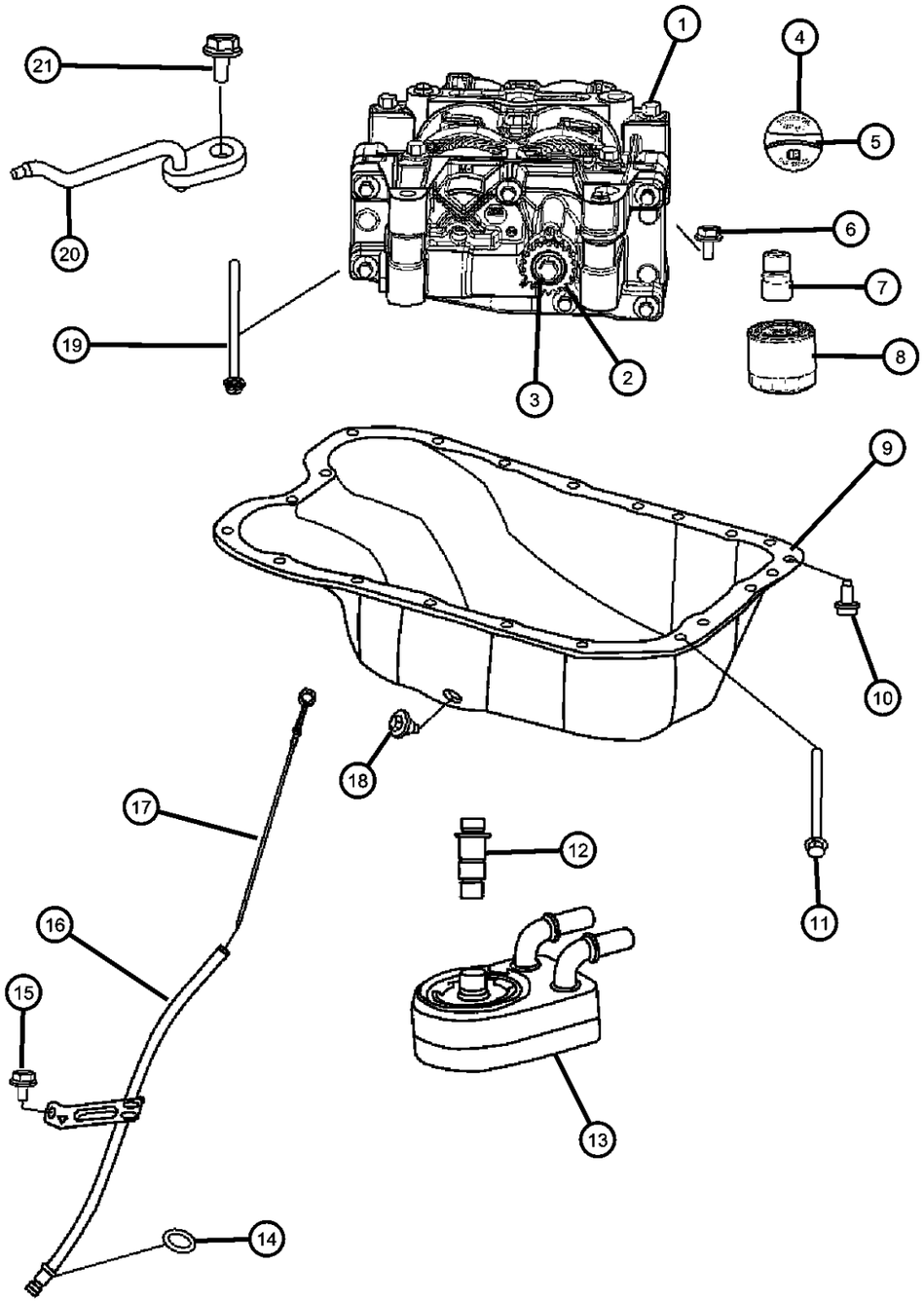

ITEM	PART NUMBER	QTY	LINE	SERIES	BODY	ENGINE	TRANS	TRIM	DESCRIPTION
16	04884733AB	1				ED3			TUBE, Engine Oil Indicator
17	04884688AD	1				ED3			INDICATOR, Engine Oil Level
18	06507741AA	1				ED3			PLUG, Oil Drain, [M14X1.50X21.50]
19	06508618AA	4				ED3			BOLT, [M8X1.25X180.00], Oil Pump To Engine Block, Mounting
20	04884767AA	1				ED3			INJECTOR, Oil
21	1140306123	1				ED3			BOLT, [M6X12], Oil Injector To Engine Block, Mounting

COMPASS/PATRIOT (MK)

SERIES	LINE	BODY	ENGINE	TRANSMISSION
H = HIGHLINE L = LOWLINE P = PREMIUM	J = JEEP - 4WD T = JEEP - 2WD	49 = HATCHBACK TYPE #2 74 = SPORT UTILITY 4-DR TYPE #4	ED3 = 2.4L 4 Cyl DOHC 16V Dual VVT Engine	DD7 = 5-Speed Manual T355 Transmission DEF = 6-Speed Manual Aisin BG6 Trans DAV = Continuously Variable Transmission DAW = Cont.Var. w/Off-Rd Crawl Ratio Trans

AR = use ase required - = Non illustrrated part

Intake Manifold And Components 2.4L [ED3]
Figure 2.4L-810

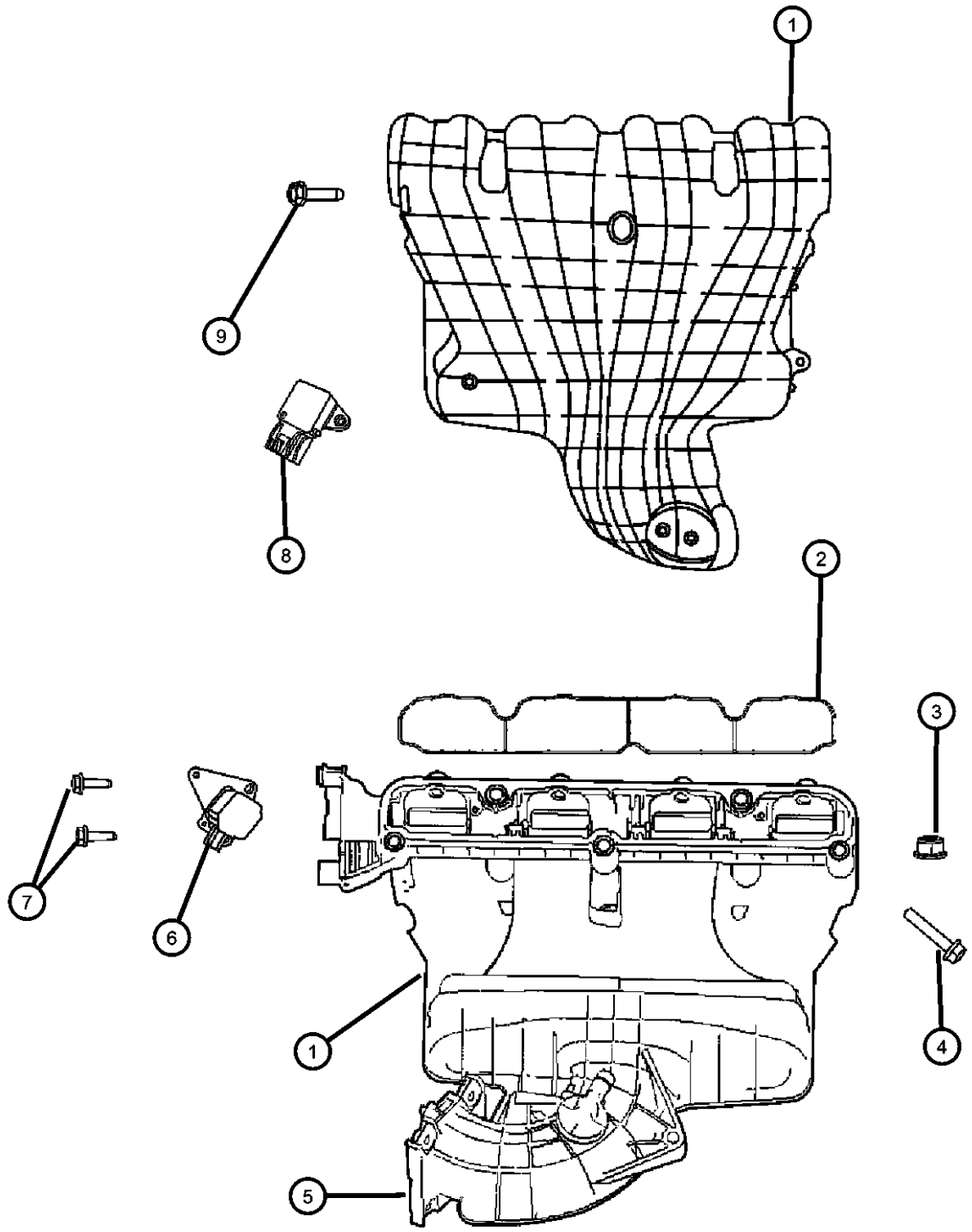

ITEM	PART NUMBER	QTY	LINE	SERIES	BODY	ENGINE	TRANS	TRIM	DESCRIPTION

NOTE:
Sales Codes:
[DAV] = Continuously Variable Transmission
[DEF] = 6-Speed Manual Aisian BG6 Transmission
[DE0] = All 6-Speed Manual Transmissions
[DD0] = All 5-Speed Manual Transmissions
[DD7] = 5-Speed Manual T355 Transmission
[ECD] = 2.0L 4 Cylinder DOHC Diesel 16 Valve Engine
[ED3] = 2.4L 4 Cylinder DOHC 16 Valve Duel VVT Engine
[ED0] = All 2.4L 4 Cylinder Gas Engines
[NAA] = Federal Emissions
[NAE] = California Emisssions
[NAS] = 50 States Emissions
[NA1] = Export Emissions

ITEM	PART NUMBER	QTY	LINE	SERIES	BODY	ENGINE	TRANS	TRIM	DESCRIPTION
1	04884495AD	1				ED3			MANIFOLD, Intake
2	04884550AB	1				ED3			GASKET, Intake Manifold
3	06104716AA	2	J, U			ED3			NUT, [M8X1.25], Intake Manifold To Cylinder Head, Mounting
4									BOLT, [M8X1.25X45.0]
	06104201AA	3				ED3			Intake Manifold To Cylinder Head, Mounting
		1				ED3			Intake Manifold Support Bracket To Engine Block, Mounting
5	04884871AA	1				ED3			BRACKET, Throttle Body Support
6	04884549AD	1				ED3			ACTUATOR, Flow Control Valve
7	06507736AA	2				ED3			SCREW, [M5.74X1.81X21.5], Actuator To Intake Manifold, Mounting
8	05033310AB	1	J			ED3			SENSOR, MAP
9	06505841AA	1				ED3			SCREW, [M4.06X1.41X17.0], Map Sensor To Intake Manifold, Mounting

COMPASS/PATRIOT (MK)

SERIES	LINE	BODY	ENGINE	TRANSMISSION
H = HIGHLINE L = LOWLINE P = PREMIUM	J = JEEP - 4WD T = JEEP - 2WD	49 = HATCHBACK TYPE #2 74 = SPORT UTILITY 4-DR TYPE #4	ED3 = 2.4L 4 Cyl DOHC 16V Dual VVT Engine	DD7 = 5-Speed Manual T355 Transmission DEF = 6-Speed Manual Aisin BG6 Trans DAV = Continuously Variable Transmission DAW = Cont.Var. w/Off-Rd Crawl Ratio Trans

AR = use ase required - = Non illustrrated part

Exhaust Manifold And Components 2.4L [ED3]
Figure 2.4L-820

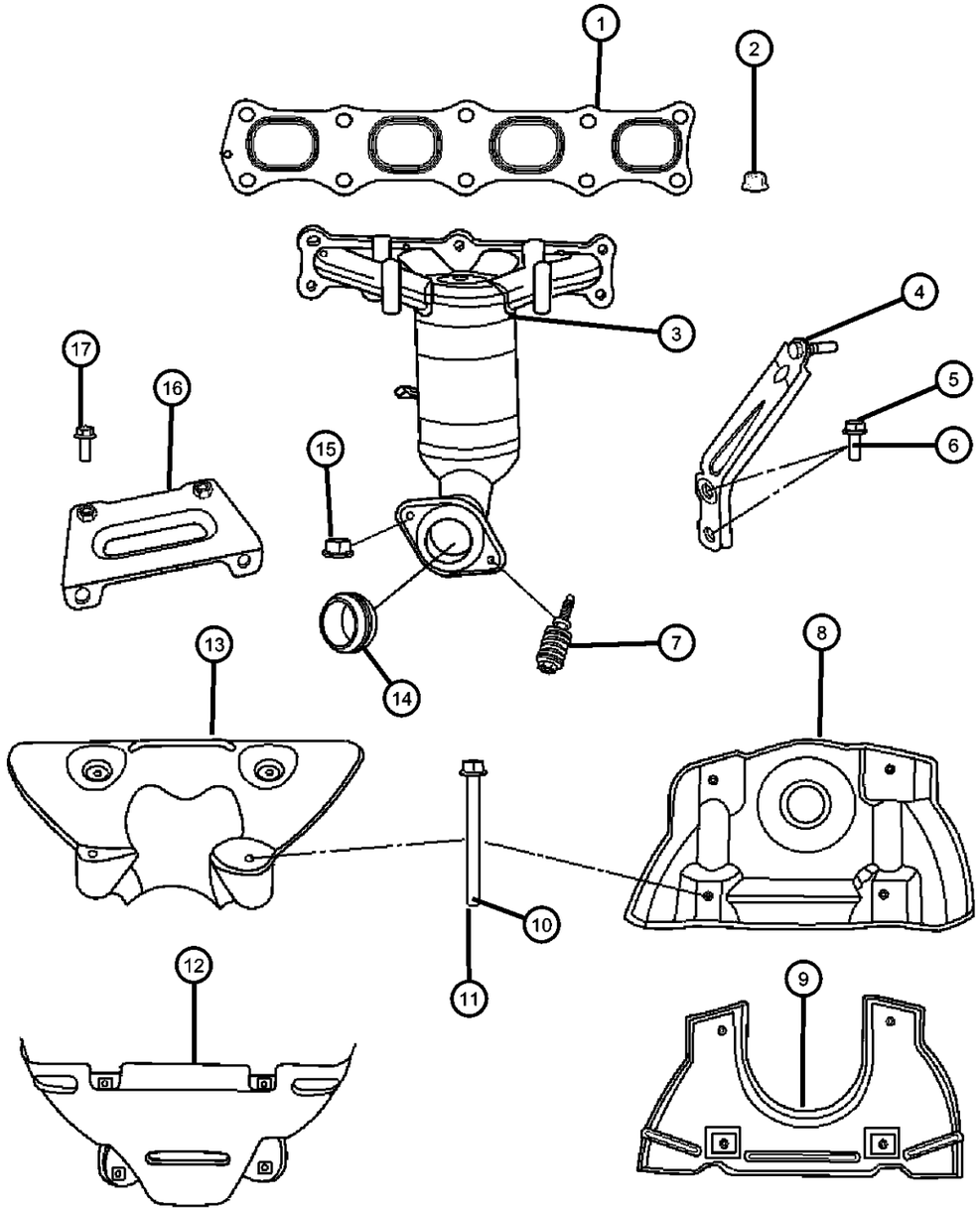

ITEM	PART NUMBER	QTY	LINE	SERIES	BODY	ENGINE	TRANS	TRIM	DESCRIPTION

NOTE:
Sales Codes:
[DAV] = Continuously Variable Transmission
[DEF] = 6-Speed Manual Aisian BG6 Transmission
[DE0] = All 6-Speed Manual Transmissions
[DD0] = All 5-Speed Manual Transmissions
[DD7] = 5-Speed Manual T355 Transmission
[ECD] = 2.0L 4 Cylinder DOHC Diesel 16 Valve Engine
[ED3] = 2.4L 4 Cylinder DOHC 16 Valve Duel VVT Engine
[ED0] = All 2.4L 4 Cylinder Gas Engines
[NAA] = Federal Emissions
[NAE] = California Emisssions
[NAS] = 50 States Emissions
[NA1] = Export Emissions

ITEM	PART NUMBER	QTY	LINE	SERIES	BODY	ENGINE	TRANS	TRIM	DESCRIPTION
1	1555A185	1							GASKET, Exhaust Manifold
2	1022510003	2							NUT, Exhaust Manifold To Cylinder Head, Mounting
3	05105460AC	1				ED3			MANIFOLD, Exhaust and Catalytic Converter, Maniverter
4	04693351AC	1							BRACKET, Exhaust Manifold
5	06104197AA	1							SCREW, [M8X1.25X25.0], Exhaust Manifold Bracket To Engine Block, Mounting
6	06508185AA	5							BOLT, [M10X1.25X30.00], Exhaust Manifold To Cylinder Head, Mounting
7	05105616AA	2				ED3			BOLT, Spring, [M8X125], Catalytic Converter To Maniverter, Mounting
8	04693326AC	1							SHIELD, Heat, AWD Only
9	04693327AC	1							SHIELD, Heat, AWD Only
10	06104191AA	4							BOLT, [M6X1.0X70.0], Heat Sheild To Exhaust Manifold, Mounting
11	06501474	2	J						BOLT, Hex Head, M8x1.25x16, Exhaust Manifold Bracket To Manifold, Mounting
12	06501474	2							SHIELD, Heat, For FWD Only, (NOT SERVICED)
13	06501474	2							SHIELD, Exhaust Manifold, For FWD Only, (NOT SERVICED)
14	05105615AB	1				ED3			GASKET, Catalytic Converter, Catalytic Converter To Maniverter
15	06104709AA	2				ED3			NUT, M8, [M8.0X1.25X8.0], For FWD Only
16									BRACKET, Exhaust Manifold

COMPASS/PATRIOT (MK)

SERIES	LINE	BODY	ENGINE	TRANSMISSION
H = HIGHLINE L = LOWLINE P = PREMIUM	J = JEEP - 4WD T = JEEP - 2WD	49 = HATCHBACK TYPE #2 74 = SPORT UTILITY 4-DR TYPE #4	ED3 = 2.4L 4 Cyl DOHC 16V Dual VVT Engine	DD7 = 5-Speed Manual T355 Transmission DEF = 6-Speed Manual Aisin BG6 Trans DAV = Continuously Variable Transmission DAW = Cont.Var. w/Off-Rd Crawl Ratio Trans

Exhaust Manifold And Components 2.4L [ED3]
Figure 2.4L-820

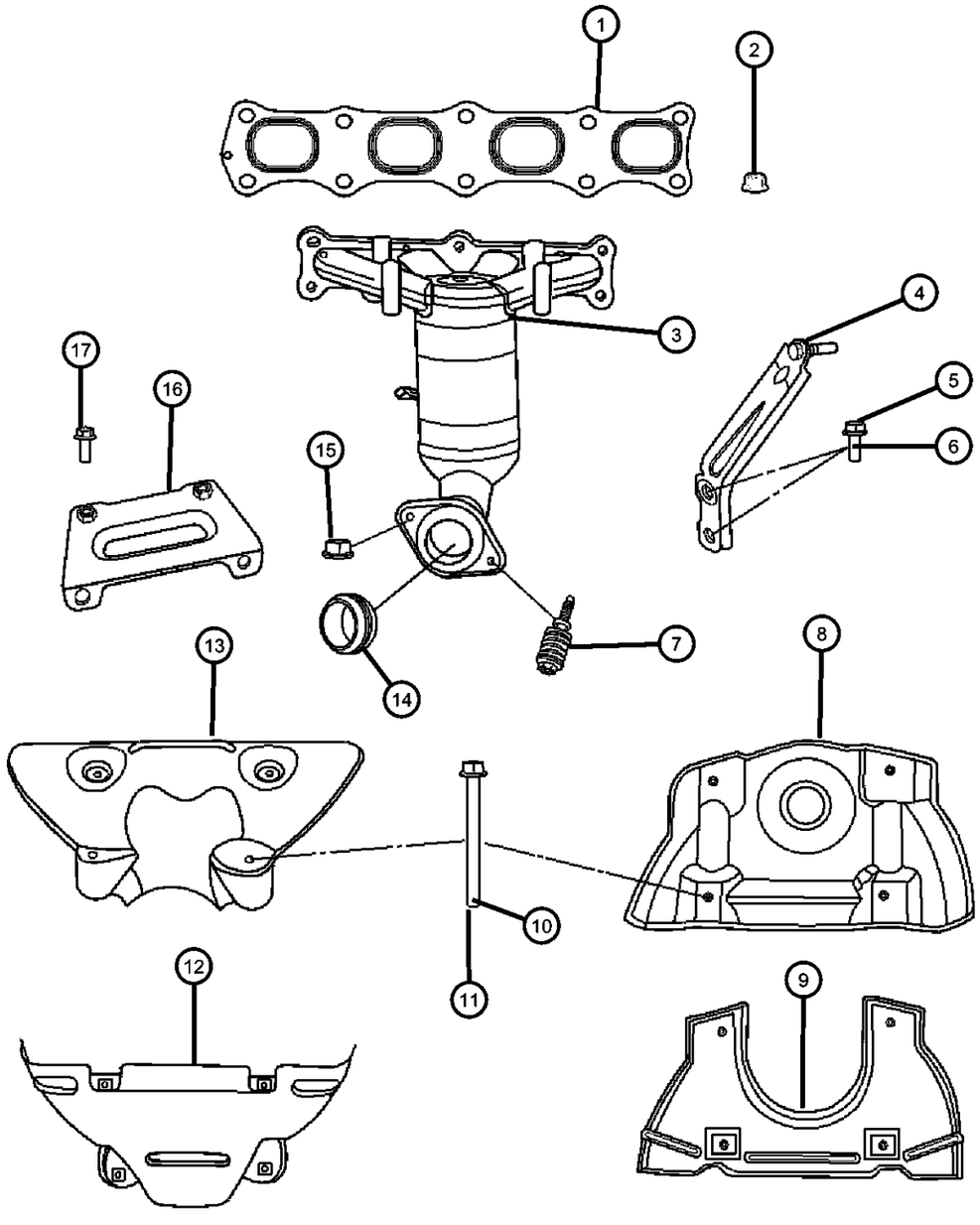

ITEM	PART NUMBER	QTY	LINE	SERIES	BODY	ENGINE	TRANS	TRIM	DESCRIPTION
	04693351AC	1	J, U			ED3			
	04693350AC	1	T						
17	06104215AA	2				ED3			BOLT, Hex Flange Head, M10x1.50x25, Exhaust Manifold Bracket To Engine Block, Mounting

COMPASS/PATRIOT (MK)

SERIES	LINE	BODY	ENGINE	TRANSMISSION
H = HIGHLINE L = LOWLINE P = PREMIUM	J = JEEP - 4WD T = JEEP - 2WD	49 = HATCHBACK TYPE #2 74 = SPORT UTILITY 4-DR TYPE #4	ED3 = 2.4L 4 Cyl DOHC 16V Dual VVT Engine	DD7 = 5-Speed Manual T355 Transmission DEF = 6-Speed Manual Aisin BG6 Trans DAV = Continuously Variable Transmission DAW = Cont.Var. w/Off-Rd Crawl Ratio Trans

Crankcase Ventilation 2.4L [ED3]
Figure 2.4L-910

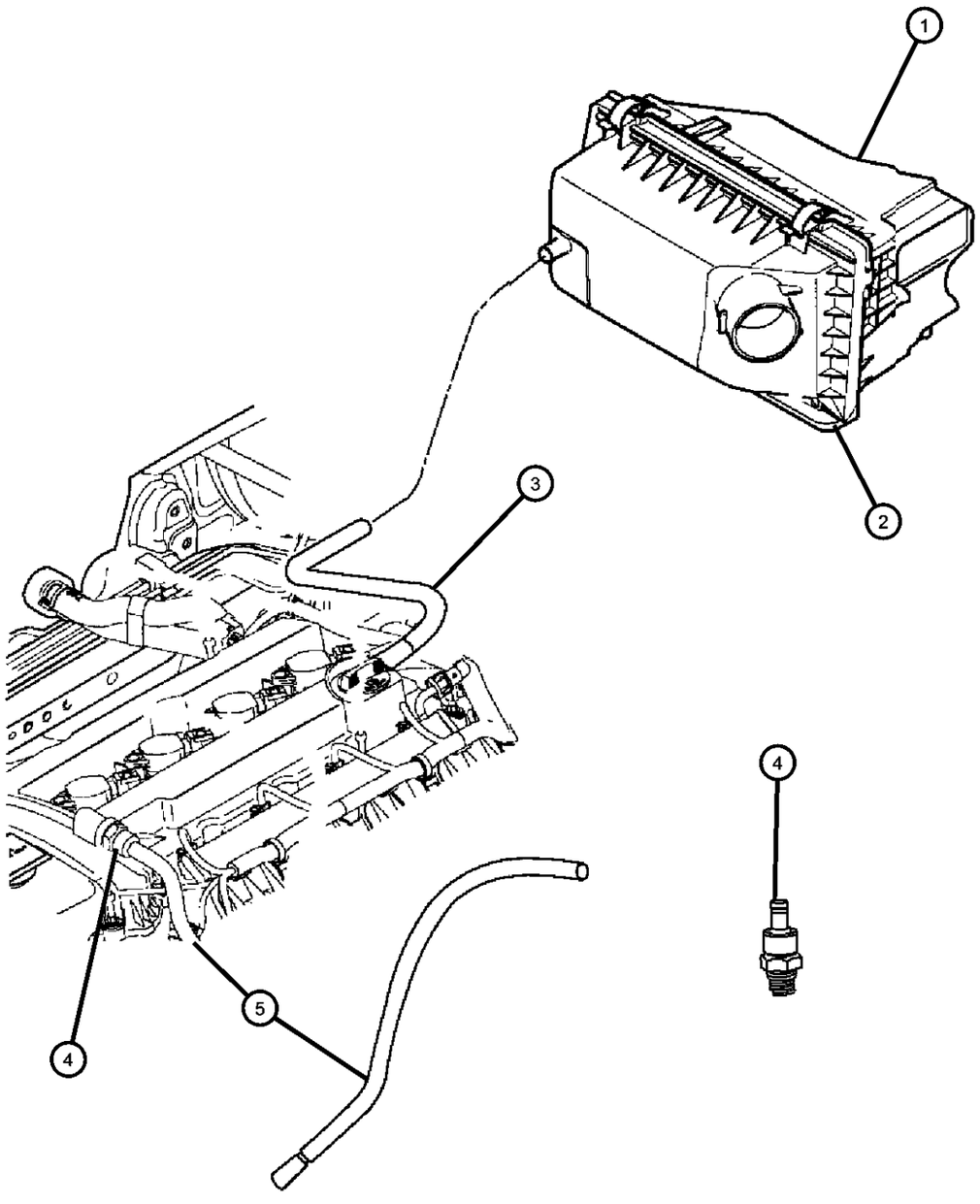

ITEM	PART NUMBER	QTY	LINE	SERIES	BODY	ENGINE	TRANS	TRIM	DESCRIPTION

NOTE:
Sales Codes:
[DAV] = Continuously Variable Transmission
[DEF] = 6-Speed Manual Aisian BG6 Transmission
[DE0] = All 6-Speed Manual Transmissions
[DD0] = All 5-Speed Manual Transmissions
[DD7] = 5-Speed Manual T355 Transmission
[ECD] = 2.0L 4 Cylinder DOHC Diesel 16 Valve Engine
[ED3] = 2.4L 4 Cylinder DOHC 16 Valve Duel VVT Engine
[ED0] = All 2.4L 4 Cylinder Gas Engines
[NAA] = Federal Emissions
[NAE] = California Emisssions
[NAS] = 50 States Emissions
[NA1] = Export Emissions

1	05183089AA	1	J			ED3			BODY, Air Cleaner
2	05183088AA	1				ED3			COVER, Air Cleaner
3	04884578AE	1				ED3			HOSE, Make Up Air
4	05047002AA	1	J, T, U			ED3			VALVE, PCV
5	05047001AA	1	J, T, U			ED3			HOSE, PCV Valve, With 15mm Nipple

COMPASS/PATRIOT (MK)

SERIES	LINE	BODY	ENGINE	TRANSMISSION
H = HIGHLINE L = LOWLINE P = PREMIUM	J = JEEP - 4WD T = JEEP - 2WD	49 = HATCHBACK TYPE #2 74 = SPORT UTILITY 4-DR TYPE #4	ED3 = 2.4L 4 Cyl DOHC 16V Dual VVT Engine	DD7 = 5-Speed Manual T355 Transmission DEF = 6-Speed Manual Aisin BG6 Trans DAV = Continuously Variable Transmission DAW = Cont.Var. w/Off-Rd Crawl Ratio Trans

Group - 2.0LD

Engine 2.0L Four Cylinder (Diesel)

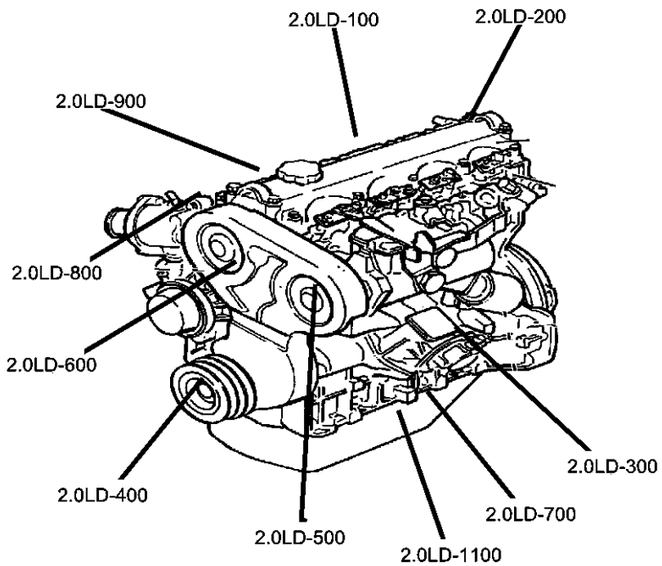

2.0LD-100
Engine Identification

X	X	XXXXX	XXXX	XXXXXXXX
Model Year	Manufacturing Plant	Component Code/Usage	Month/Day	Serial Code
Last digit of model year	Saltillo S Trenton T Toluca K	Engine 3.2L – 3.8L Usage Pass Car PC Truck T		Last 8 Digits of VIN

2.0LD-200
Cylinder Head

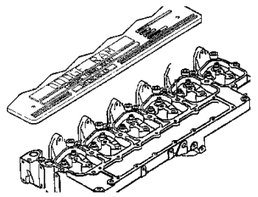

2.0LD-300
Cylinder Block

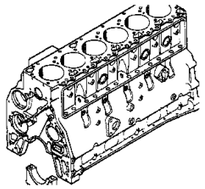

2.0LD-400
Crankshaft, Piston and Torque Converter

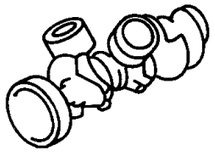

2.0LD-500
Camshafts & Valves

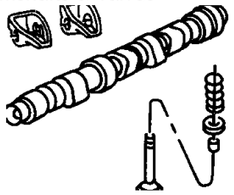

2.0LD-600
Timing Belt and Cover

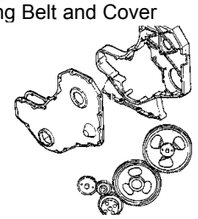

2.0LD-700
Engine Oiling

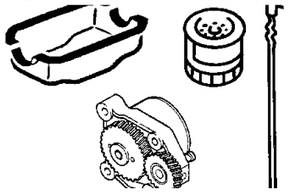

2.0LD-800
Manifolds

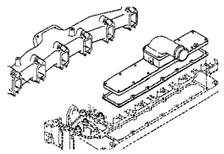

2.0LD-900
Crankcase Ventilation

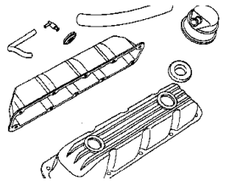

Group - 2.0LD Engine 2.0L Four Cylinder (Diesel)

Illustration Title — Group-Fig. No.

Engine Identification
Engine Assembly And Identification 2.0L Diesel [ECD] ..... Fig. 2.0LD - 110
Engine Covers And Components 2.0L Diesel [ECD] ..... Fig. 2.0LD - 120

Cylinder Head
Cylinder Head Covers And Components 2.0L Diesel [ECD] ..... Fig. 2.0LD - 210
Cylinder Head 2.0L Diesel [ECD] ..... Fig. 2.0LD - 220

Cylinder Block
Cylinder Block And Components 2.0L Diesel [ECD] ..... Fig. 2.0LD - 310

Crankshaft, Piston and Torque Converter
Crankshaft And Pistons 2.0L Diesel [ECD] ..... Fig. 2.0LD - 410

Camshafts & Valves
Camshafts And Valves 2.0L Diesel [ECD] ..... Fig. 2.0LD - 510

Timing Belt and Cover
Timing Belt And Covers 2.0L Diesel [ECD] ..... Fig. 2.0LD - 610

Engine Oiling
Engine Oilling Pump, Pan, Indicator 2.0L Diesel [ECD] ..... Fig. 2.0LD - 710
Engine Oil Cooler And Filter 2.0L Diesel [ECD] ..... Fig. 2.0LD - 720

Manifolds
Intake Manifold 2.0L Diesel [ECD] ..... Fig. 2.0LD - 810
Exhaust Manifold And Turbo Charger 2.0L Diesel [ECD] ..... Fig. 2.0LD - 820

Crankcase Ventilation
Crankcase Ventilation 2.0L Diesel [ECD] ..... Fig. 2.0LD - 910

Engine Assembly And Identification 2.0L Diesel [ECD]
Figure 2.0LD-110

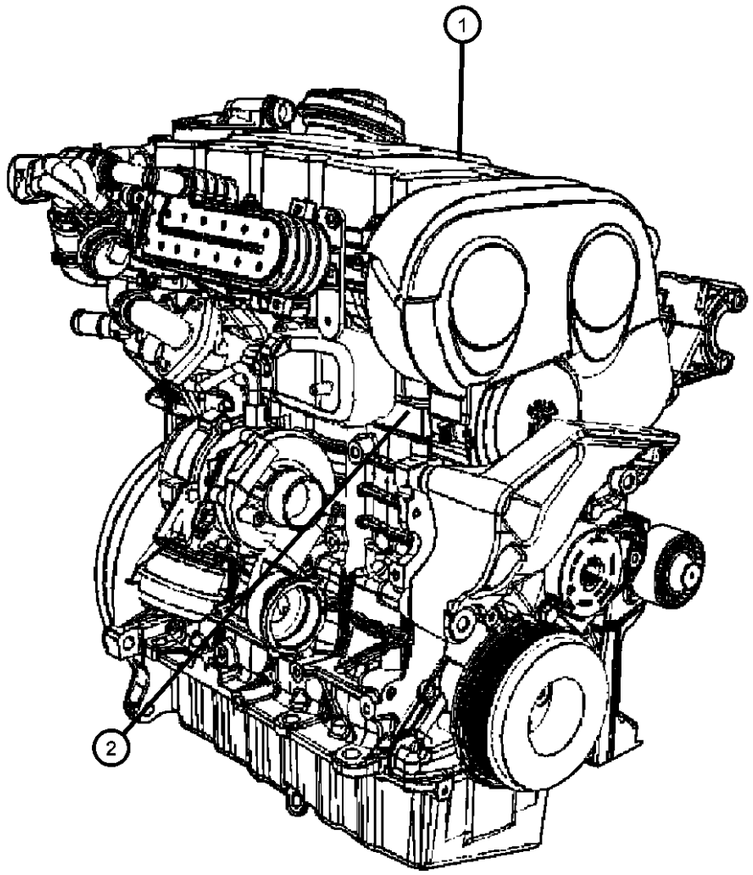

ITEM	PART NUMBER	QTY	LINE	SERIES	BODY	ENGINE	TRANS	TRIM	DESCRIPTION

NOTE:
Base Engine Does Not Include Any Externa Bolt On Components, Only Main Components Cylinder Head, Cylinder Block, And Internals ETC.
Sales Codes:
[DAV] = Continuously Variable Transmission
[DEF] = 6-Speed Manual Aisian BG6 Transmission
[DE0] = All 6-Speed Manual Transmissions
[DD0] = All 5-Speed Manual Transmissions
[DD7] = 5-Speed Manual T355 Transmission
[ECD] = 2.0L 4 Cylinder DOHC Diesel 16 Valve Engine
[ED3] = 2.4L 4 Cylinder DOHC 16 Valve Duel VVT Engine
[ED0] = All 2.4L 4 Cylinder Gas Engines
[NAA] = Federal Emissions
[NAE] = California Emisssions
[NAS] = 50 States Emissions
[NA1] = Export Emissions

1	05047001AA	1							ENGINE, Complete, Diesel, Serviced By Base Engine Only, (NOT SERVICED)
2	68001564AA	1	J, T, U			ECD			ENGINE, See Note
-3	68001590AA	1	J, T, U			ECD			GASKET KIT, Engine

COMPASS/PATRIOT (MK)

SERIES	LINE	BODY	ENGINE	TRANSMISSION
H = HIGHLINE L = LOWLINE P = PREMIUM	J = JEEP - 4WD T = JEEP - 2WD	49 = HATCHBACK TYPE #2 74 = SPORT UTILITY 4-DR TYPE #4	ED3 = 2.4L 4 Cyl DOHC 16V Dual VVT Engine	DD7 = 5-Speed Manual T355 Transmission DEF = 6-Speed Manual Aisin BG6 Trans DAV = Continuously Variable Transmission DAW = Cont.Var. w/Off-Rd Crawl Ratio Trans

Engine Covers And Components 2.0L Diesel [ECD]
Figure 2.0LD-120

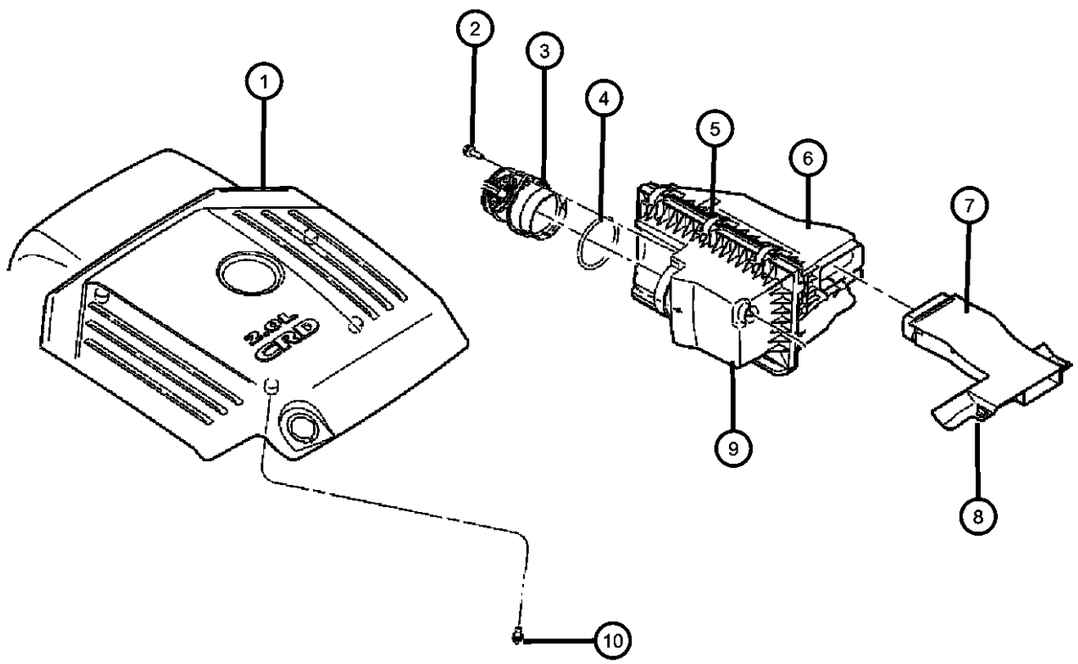

ITEM	PART NUMBER	QTY	LINE	SERIES	BODY	ENGINE	TRANS	TRIM	DESCRIPTION
NOTE:									
Sales Codes:									
[DAV] = Continuously Variable Transmission									
[DEF] = 6-Speed Manual Aisian BG6 Transmission									
[DE0] = All 6-Speed Manual Transmissions									
[DD0] = All 5-Speed Manual Transmissions									
[DD7] = 5-Speed Manual T355 Transmission									
[ECD] = 2.0L 4 Cylinder DOHC Diesel 16 Valve Engine									
[ED3] = 2.4L 4 Cylinder DOHC 16 Valve Duel VVT Engine									
[ED0] = All 2.4L 4 Cylinder Gas Engines									
[NAA] = Federal Emissions									
[NAE] = California Emisssions									
[NAS] = 50 States Emissions									
[NA1] = Export Emissions									
1	04891644AC	1				ECD			COVER, Engine
2	06508683AA	2				ECD			BOLT, [M6X1.00X20.00], Mass Air Flow Sensor To Air Box, Mounting
3	05033320AA	1				ECD			SENSOR, Mass Airflow
4	05149036AA	1				ECD			O RING, Between Air Hose And Mass Airflow Sensor
5	05149036AA	1							CLIP, Air Cleaner Cover, Serviced With Body, (NOT SERVICED)
6	05183089AA	1	J, T, U			ECD			BODY, Air Cleaner
7	04891647AA	1				ECD			DUCT, Fresh Air
8	04891647AA	1							FASTENER, Serviced With Duct, (NOT SERVICED)
9	05183087AA	1	J, T, U			ECD			COVER, Air Cleaner
10	05183087AA	1							ISOLATOR, (NOT SERVICED)

COMPASS/PATRIOT (MK)

SERIES	LINE	BODY	ENGINE	TRANSMISSION
H = HIGHLINE L = LOWLINE P = PREMIUM	J = JEEP - 4WD T = JEEP - 2WD	49 = HATCHBACK TYPE #2 74 = SPORT UTILITY 4-DR TYPE #4	ED3 = 2.4L 4 Cyl DOHC 16V Dual VVT Engine	DD7 = 5-Speed Manual T355 Transmission DEF = 6-Speed Manual Aisin BG6 Trans DAV = Continuously Variable Transmission DAW = Cont.Var. w/Off-Rd Crawl Ratio Trans

AR = use ase required - = Non illustrrated part

Cylinder Head Covers And Components 2.0L Diesel [ECD]
Figure 2.0LD-210

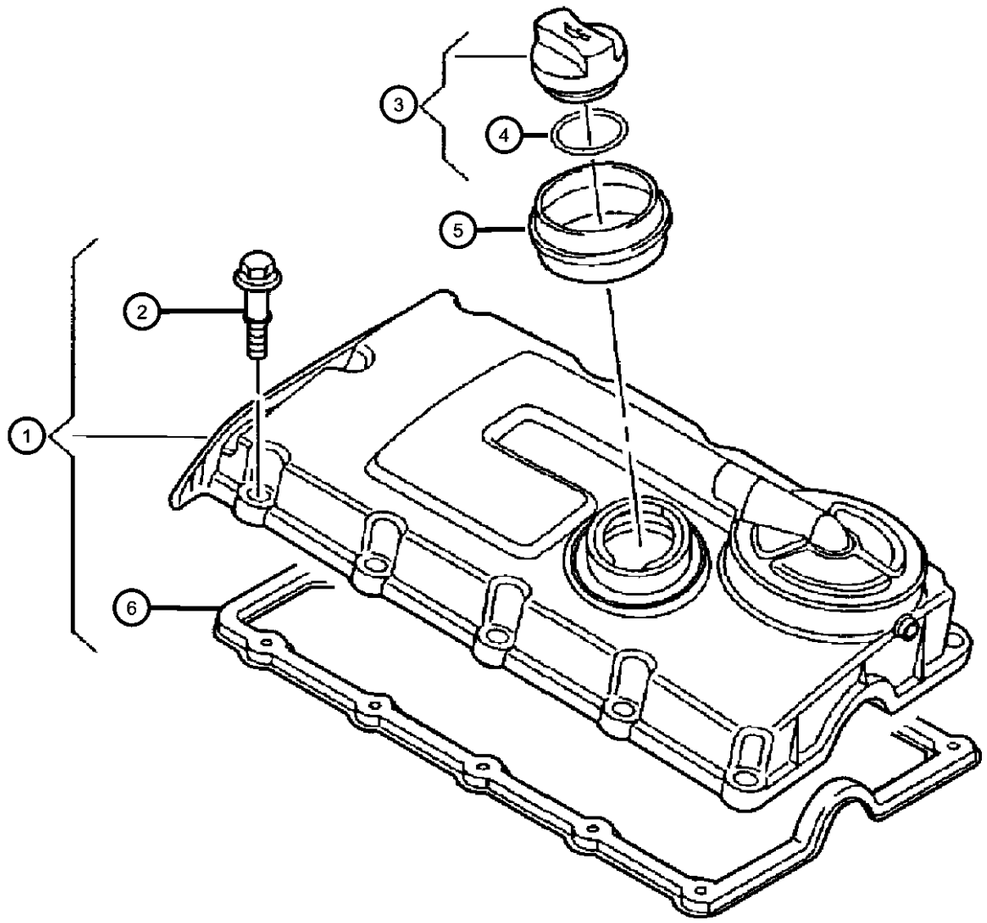

ITEM	PART NUMBER	QTY	LINE	SERIES	BODY	ENGINE	TRANS	TRIM	DESCRIPTION

NOTE:
Sales Codes:
[DAV] = Continuously Variable Transmission
[DEF] = 6-Speed Manual Aisian BG6 Transmission
[DE0] = All 6-Speed Manual Transmissions
[DD0] = All 5-Speed Manual Transmissions
[DD7] = 5-Speed Manual T355 Transmission
[ECD] = 2.0L 4 Cylinder DOHC Diesel 16 Valve Engine
[ED3] = 2.4L 4 Cylinder DOHC 16 Valve Duel VVT Engine
[ED0] = All 2.4L 4 Cylinder Gas Engines
[NAA] = Federal Emissions
[NAE] = California Emisssions
[NAS] = 50 States Emissions
[NA1] = Export Emissions

1	68001294AA	1	J, T, U			ECD			COVER, Cylinder Head, Includes Items 2, 6
2	68001292AA	11	J, T, U			ECD			SCREW, Cylinder Head Cover To Cylinder Head, Mounting
3	68001290AA	1	J, T, U			ECD			CAP, Oil Filler, Includes Item 4
4	68001296AA	1	J, T, U			ECD			SEAL, Oil Fill Cap
5	68001312AA	1	J, T, U			ECD			GASKET, Oil Filler Cap
6	68001293AA	1	J, T, U			ECD			GASKET, Rocker Cover

COMPASS/PATRIOT (MK)

SERIES	LINE	BODY	ENGINE	TRANSMISSION
H = HIGHLINE L = LOWLINE P = PREMIUM	J = JEEP - 4WD T = JEEP - 2WD	49 = HATCHBACK TYPE #2 74 = SPORT UTILITY 4-DR TYPE #4	ED3 = 2.4L 4 Cyl DOHC 16V Dual VVT Engine	DD7 = 5-Speed Manual T355 Transmission DEF = 6-Speed Manual Aisin BG6 Trans DAV = Continuously Variable Transmission DAW = Cont.Var. w/Off-Rd Crawl Ratio Trans

Cylinder Head 2.0L Diesel [ECD]
Figure 2.0LD-220

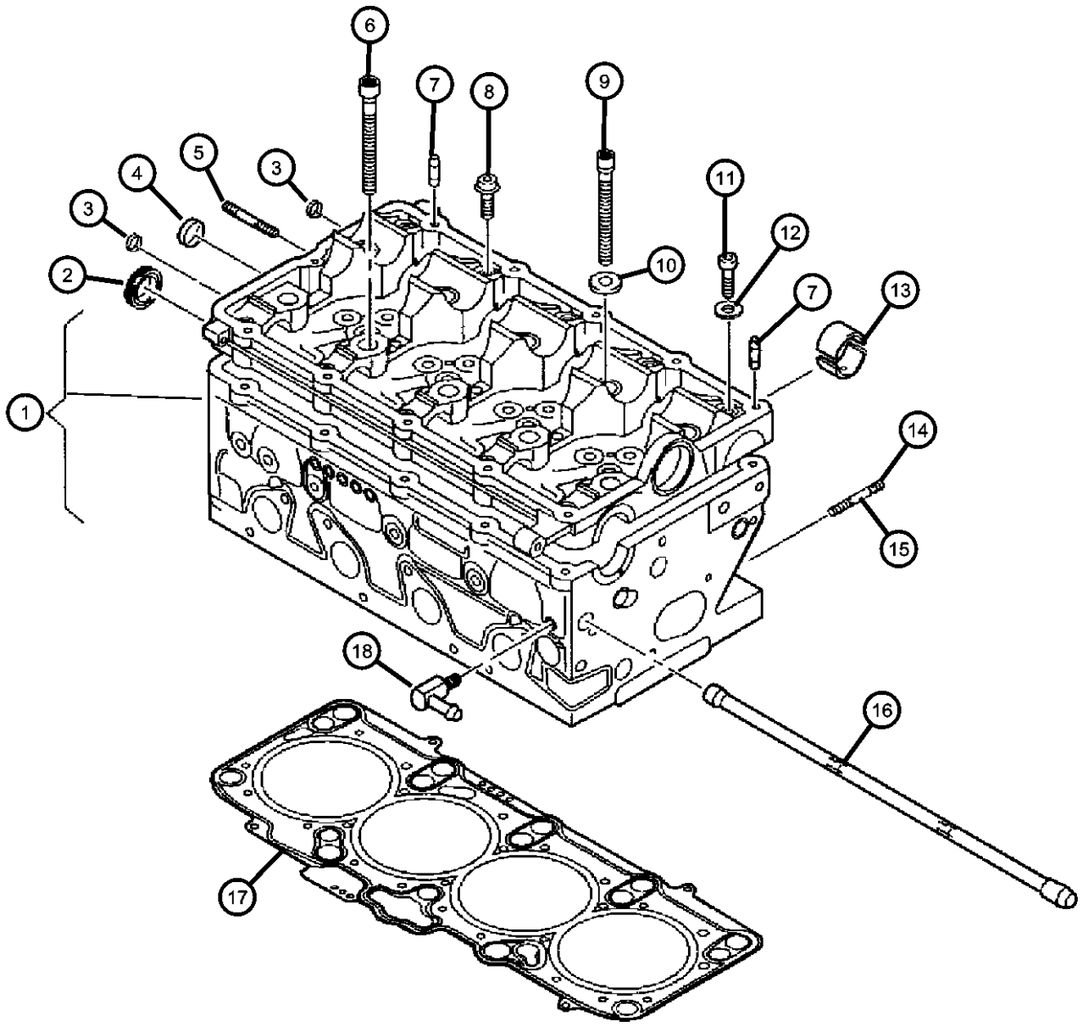

ITEM	PART NUMBER	QTY	LINE	SERIES	BODY	ENGINE	TRANS	TRIM	DESCRIPTION
NOTE:									
Sales Codes:									
[DAV] = Continuously Variable Transmission									
[DEF] = 6-Speed Manual Aisian BG6 Transmission									
[DE0] = All 6-Speed Manual Transmissions									
[DD0] = All 5-Speed Manual Transmissions									
[DD7] = 5-Speed Manual T355 Transmission									
[ECD] = 2.0L 4 Cylinder DOHC Diesel 16 Valve Engine									
[ED3] = 2.4L 4 Cylinder DOHC 16 Valve Duel VVT Engine									
[ED0] = All 2.4L 4 Cylinder Gas Engines									
[NAA] = Federal Emissions									
[NAE] = California Emisssions									
[NAS] = 50 States Emissions									
[NA1] = Export Emissions									
1	68001295AA	1	J, T, U			ECD			HEAD, Cylinder, Includes Items 3, 4, 7, 17,
2	68001164AA	2	J, T, U			ECD			SEAL, Camshaft
3	68001340AA	3	J, T, U			ECD			PLUG, Cylinder Block Oil Hole
4	68001486AA	1	J, T, U			ECD			PLUG, Expansion
5									STUD
	68001310AA	1	J, T, U			ECD			
	68001501AA	1	J, T, U			ECD			[2]
	68001546AA	1	J, T, U			ECD			[3]
6	68001457AA	10	J, T, U			ECD			BOLT, Cylinder Head
7	68001492AA	4	J, T, U			ECD			DOWEL
8	68001487AA	1	J, T, U			ECD			BOLT, Cam Plate To Cylinder Head, Mounting
9	68001458AA	8	J, T, U			ECD			BOLT
10	68001522AA	1	J, T, U			ECD			WASHER
11	68019947AA	10	J, T, U			ECD			SCREW, Cam Plate To Cylinder Head, Mounting
12	68001523AA	10	J, T, U			ECD			WASHER
13									BEARING
	68001565AA	1	J, T, U			ECD			Lower
	68001570AA	1	J, T, U			ECD			Upper
14	68001493AA	4	J, T, U			ECD			STUD, Double Ended
15	68001524AA	8	J, T, U			ECD			STUD
16	68001311AA	1	J, T, U			ECD			RAIL, Fuel

COMPASS/PATRIOT (MK)

SERIES	LINE	BODY	ENGINE	TRANSMISSION
H = HIGHLINE L = LOWLINE P = PREMIUM	J = JEEP - 4WD T = JEEP - 2WD	49 = HATCHBACK TYPE #2 74 = SPORT UTILITY 4-DR TYPE #4	ED3 = 2.4L 4 Cyl DOHC 16V Dual VVT Engine	DD7 = 5-Speed Manual T355 Transmission DEF = 6-Speed Manual Aisin BG6 Trans DAV = Continuously Variable Transmission DAW = Cont.Var. w/Off-Rd Crawl Ratio Trans

Cylinder Head 2.0L Diesel [ECD]
Figure 2.0LD-220

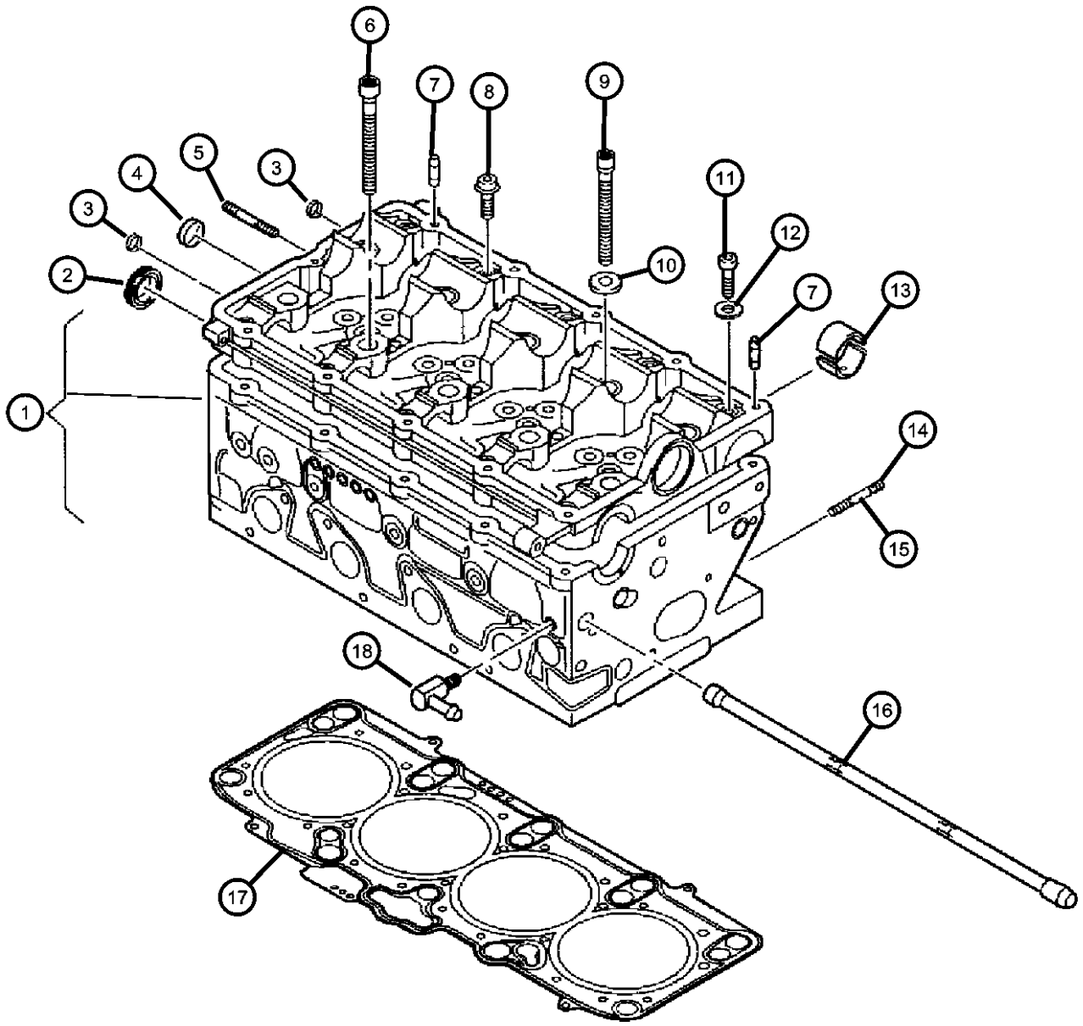

ITEM	PART NUMBER	QTY	LINE	SERIES	BODY	ENGINE	TRANS	TRIM	DESCRIPTION
17									GASKET, Cylinder Head
	68001272AA	1	J, T, U			ECD			[2]
	68001152AA	1	J, T, U			ECD			[1]
18	68001314AA	1	J, T, U			ECD			TUBE

COMPASS/PATRIOT (MK)

SERIES	LINE	BODY	ENGINE	TRANSMISSION
H = HIGHLINE L = LOWLINE P = PREMIUM	J = JEEP - 4WD T = JEEP - 2WD	49 = HATCHBACK TYPE #2 74 = SPORT UTILITY 4-DR TYPE #4	ED3 = 2.4L 4 Cyl DOHC 16V Dual VVT Engine	DD7 = 5-Speed Manual T355 Transmission DEF = 6-Speed Manual Aisin BG6 Trans DAV = Continuously Variable Transmission DAW = Cont.Var. w/Off-Rd Crawl Ratio Trans

Cylinder Block And Components 2.0L Diesel [ECD]
Figure 2.0LD-310

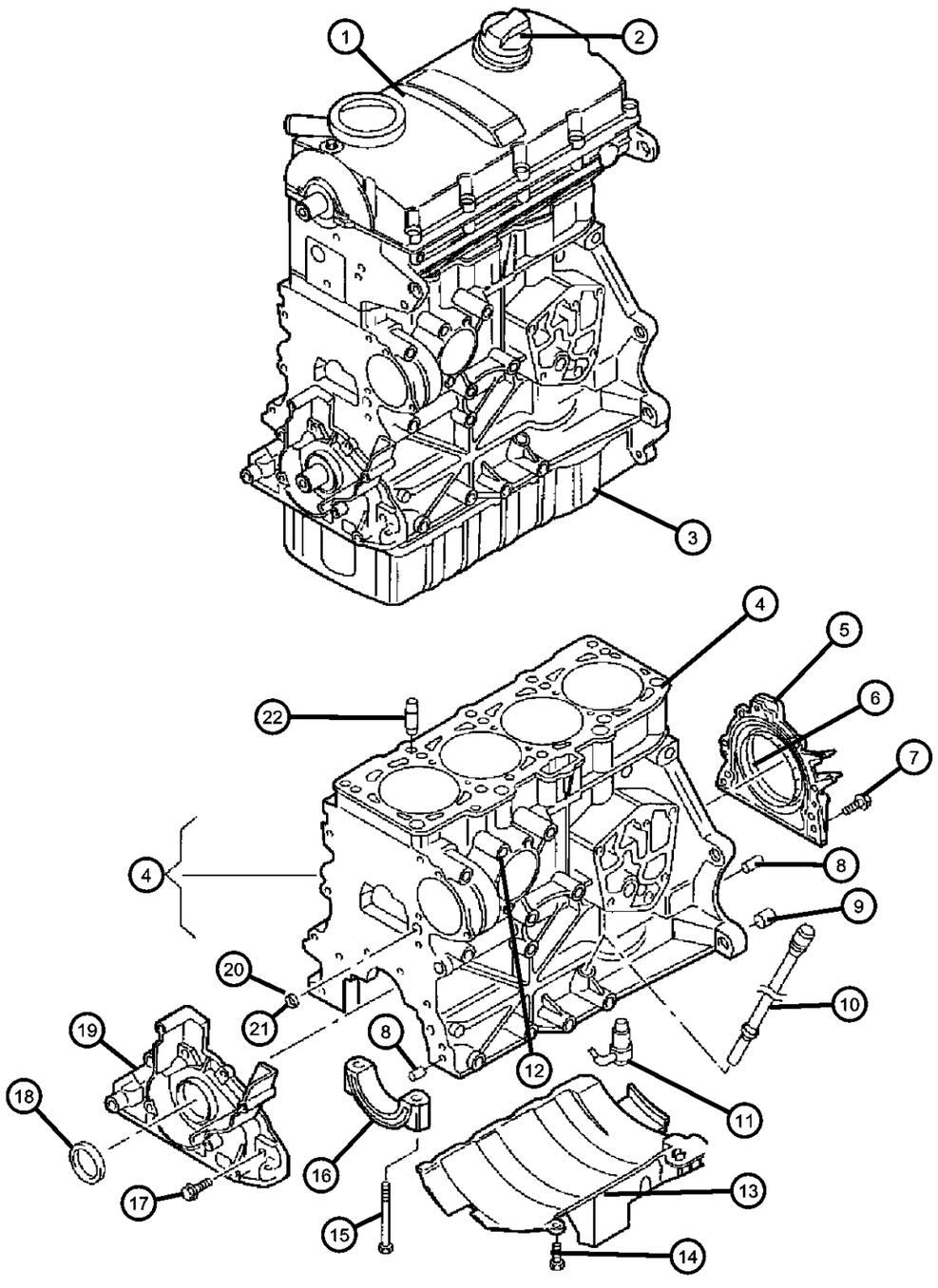

ITEM	PART NUMBER	QTY	LINE	SERIES	BODY	ENGINE	TRANS	TRIM	DESCRIPTION

NOTE:
Base Engine Does Not Include Any Externa Bolt On Components, Only Main Components Cylinder Head, Cylinder Block, And Internals ETC.
Sales Codes:
[DAV] = Continuously Variable Transmission
[DEF] = 6-Speed Manual Aisian BG6 Transmission
[DE0] = All 6-Speed Manual Transmissions
[DD0] = All 5-Speed Manual Transmissions
[DD7] = 5-Speed Manual T355 Transmission
[ECD] = 2.0L 4 Cylinder DOHC Diesel 16 Valve Engine
[ED3] = 2.4L 4 Cylinder DOHC 16 Valve Duel VVT Engine
[ED0] = All 2.4L 4 Cylinder Gas Engines
[NAA] = Federal Emissions
[NAE] = California Emisssions
[NAS] = 50 States Emissions
[NA1] = Export Emissions

1	68001564AA	1	J, T, U			ECD			ENGINE, See Note, Base
2	68001290AA	1	T, J, U			ECD			CAP, Oil Filler
3	68001342AA	1	J, T, U			ECD			PAN, Engine Oil
4	68001269AA	1	J, T, U			ECD			BLOCK, Cylinder, Bare Block
5	68000669AA	1				ECD			RETAINER, Seal Rear Main, Includes Main Seal
6	68000669AA	1							SEAL, Rear Main Crankshaft, Serviced In Item #5 Retainer, (NOT SERVICED)
7	68000669AA	1							BOLT, (NOT SERVICED)
8	68001492AA	4	J, T, U			ECD			DOWEL, Cylinder Block
9	68000664AA	2				ECD			DOWEL, Clutch Housing To Block, Mounting
10	68001464AA	1	J, T, U			ECD			TUBE, Oil Feed
11	68000668AA	4				ECD			JET, Piston Oil Cooler
12	68001136AA	1	J, T, U			ECD			DOWEL, Thermostat Housing, Mounting
13	68000670AA	1				ECD			TRAY, Windage
14	68000670AA	1							BOLT, (NOT SERVICED)
15	68001347AA	10	J, T, U			ECD			SCREW
16	68001347AA	10							CAP, Main, Serviced with Cylinder Block, (NOT SERVICED)
17	68001543AA	7	J, T, U			ECD			BOLT
18	68000666AA	1				ECD			OIL SEAL, Main, Front
19	68000667AA	1				ECD			RETAINER, Front Seal

COMPASS/PATRIOT (MK)

SERIES	LINE	BODY	ENGINE	TRANSMISSION
H = HIGHLINE L = LOWLINE P = PREMIUM	J = JEEP - 4WD T = JEEP - 2WD	49 = HATCHBACK TYPE #2 74 = SPORT UTILITY 4-DR TYPE #4	ED3 = 2.4L 4 Cyl DOHC 16V Dual VVT Engine	DD7 = 5-Speed Manual T355 Transmission DEF = 6-Speed Manual Aisin BG6 Trans DAV = Continuously Variable Transmission DAW = Cont.Var. w/Off-Rd Crawl Ratio Trans

AR = use ase required - = Non illustrrated part

Cylinder Block And Components 2.0L Diesel [ECD]
Figure 2.0LD-310

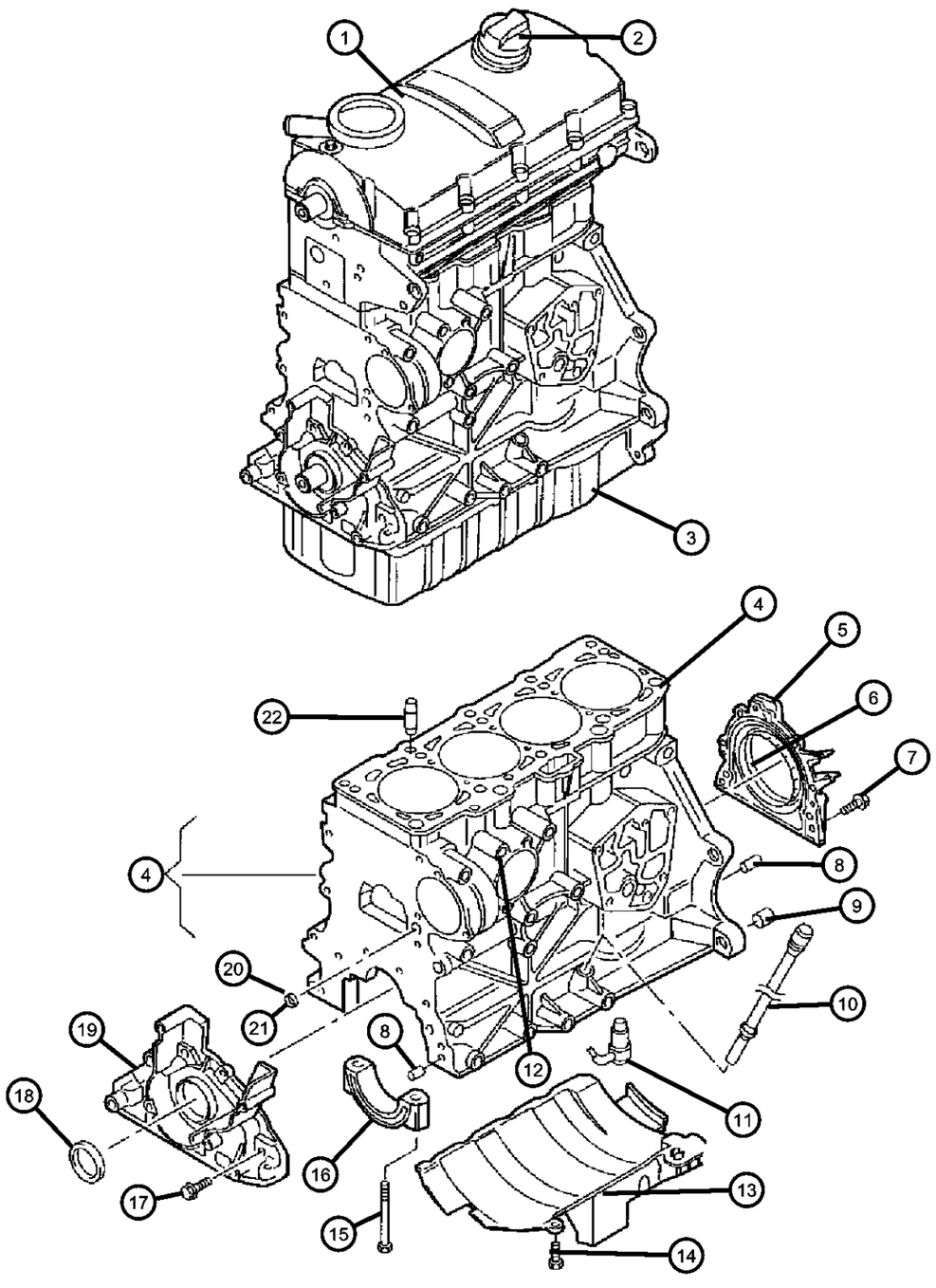

ITEM	PART NUMBER	QTY	LINE	SERIES	BODY	ENGINE	TRANS	TRIM	DESCRIPTION
20	68001340AA	3	J, T, U			ECD			PLUG, Cylinder Block Oil Hole
21	68001479AA	1	J, T, U			ECD			PLUG, Cylinder Block
22	68000665AA	2				ECD			SLEEVE, Cylinder Head To Cylinder Block, Mounting

COMPASS/PATRIOT (MK)

SERIES	LINE	BODY	ENGINE	TRANSMISSION
H = HIGHLINE L = LOWLINE P = PREMIUM	J = JEEP - 4WD T = JEEP - 2WD	49 = HATCHBACK TYPE #2 74 = SPORT UTILITY 4-DR TYPE #4	ED3 = 2.4L 4 Cyl DOHC 16V Dual VVT Engine	DD7 = 5-Speed Manual T355 Transmission DEF = 6-Speed Manual Aisin BG6 Trans DAV = Continuously Variable Transmission DAW = Cont.Var. w/Off-Rd Crawl Ratio Trans

AR = use ase required - = Non illustrrated part

Crankshaft And Pistons 2.0L Diesel [ECD]
Figure 2.0LD-410

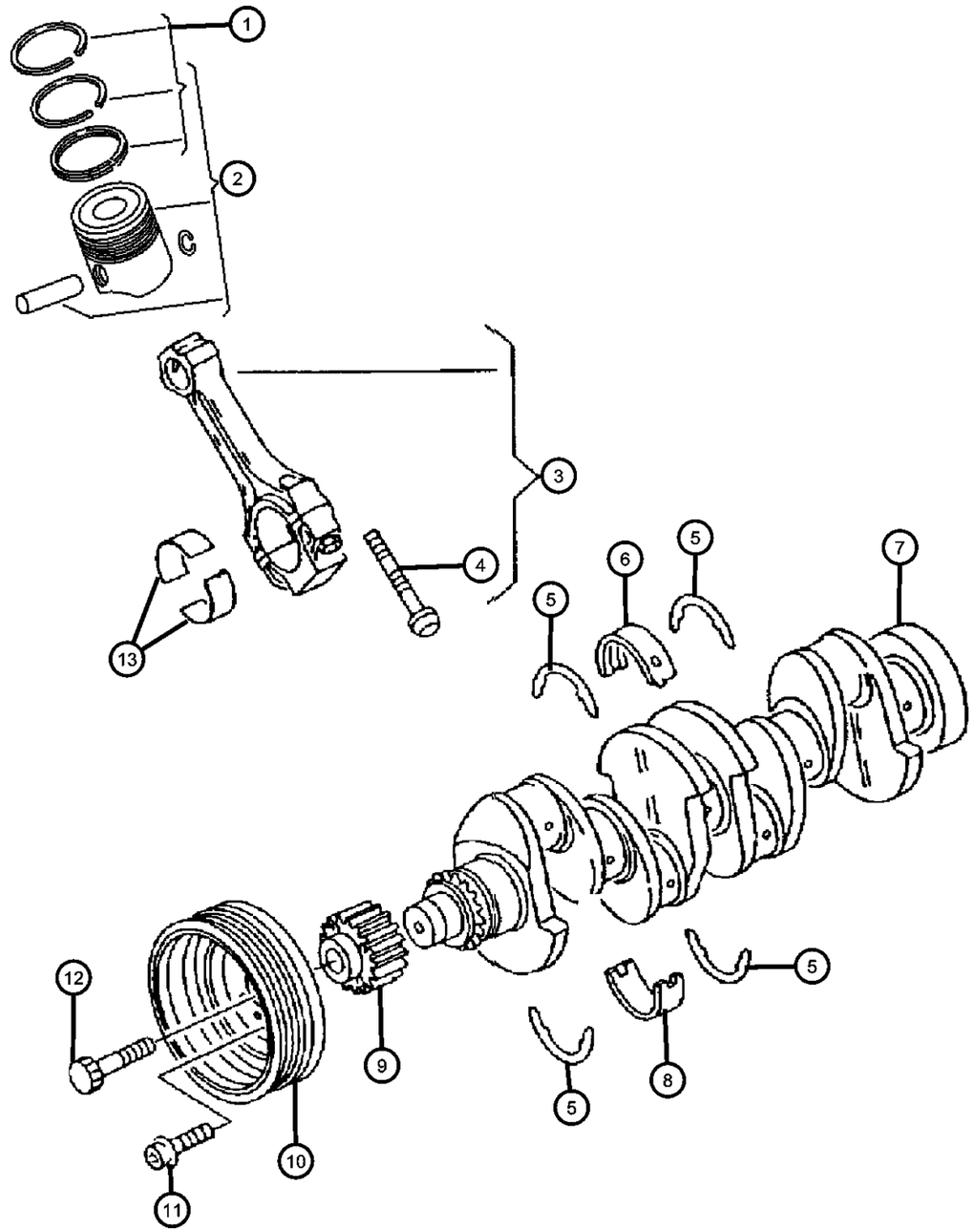

ITEM	PART NUMBER	QTY	LINE	SERIES	BODY	ENGINE	TRANS	TRIM	DESCRIPTION

NOTE:
See Group 6 Clutch For Flywheel
Sales Codes:
[DAV] = Continuously Variable Transmission
[DEF] = 6-Speed Manual Aisian BG6 Transmission
[DE0] = All 6-Speed Manual Transmissions
[DD0] = All 5-Speed Manual Transmissions
[DD7] = 5-Speed Manual T355 Transmission
[ECD] = 2.0L 4 Cylinder DOHC Diesel 16 Valve Engine
[ED3] = 2.4L 4 Cylinder DOHC 16 Valve Duel VVT Engine
[ED0] = All 2.4L 4 Cylinder Gas Engines
[NAA] = Federal Emissions
[NAE] = California Emisssions
[NAS] = 50 States Emissions
[NA1] = Export Emissions

ITEM	PART NUMBER	QTY	LINE	SERIES	BODY	ENGINE	TRANS	TRIM	DESCRIPTION
1	68000632AA	1				ECD			RING KIT, Piston
2	68001305AA	4	J, T, U			ECD			PISTON, ENGINE, Includes Item 1
3	68000673AA	4				ECD			ROD, Connecting, Includes Item 4
4	68000673AA	4							BOLT, Connecting Rod, (NOT SERVICED)
5	68000631AA	1				ECD			WASHER KIT, Crankshaft Thrust
6	68001139AA	5	J, T, U			ECD			BEARING, Crankshaft
7	68000671AA	1				ECD			CRANKSHAFT
8									BEARING, Crankshaft
	68001343AA	5	J, T, U			ECD			Main, Upper
	68001344AA	5	J, T, U			ECD			Main, Lower
9	68000672AA	1				ECD			GEAR, Crankshaft
10	68001304AA	1	J, T, U			ECD			DAMPER, Engine Vibration
11	68001500AA	4	J, T, U			ECD			BOLT
12	68001500AA	4							BOLT, Crankshaft Vibration Damper, (NOT SERVICED)
13									BEARING, Connecting Rod, STD.
	68000674AA	4				ECD			Upper
	68002278AA	4				ECD			Lower

COMPASS/PATRIOT (MK)

SERIES	LINE	BODY	ENGINE	TRANSMISSION
H = HIGHLINE L = LOWLINE P = PREMIUM	J = JEEP - 4WD T = JEEP - 2WD	49 = HATCHBACK TYPE #2 74 = SPORT UTILITY 4-DR TYPE #4	ED3 = 2.4L 4 Cyl DOHC 16V Dual VVT Engine	DD7 = 5-Speed Manual T355 Transmission DEF = 6-Speed Manual Aisin BG6 Trans DAV = Continuously Variable Transmission DAW = Cont.Var. w/Off-Rd Crawl Ratio Trans

Camshafts And Valves 2.0L Diesel [ECD]
Figure 2.0LD-510

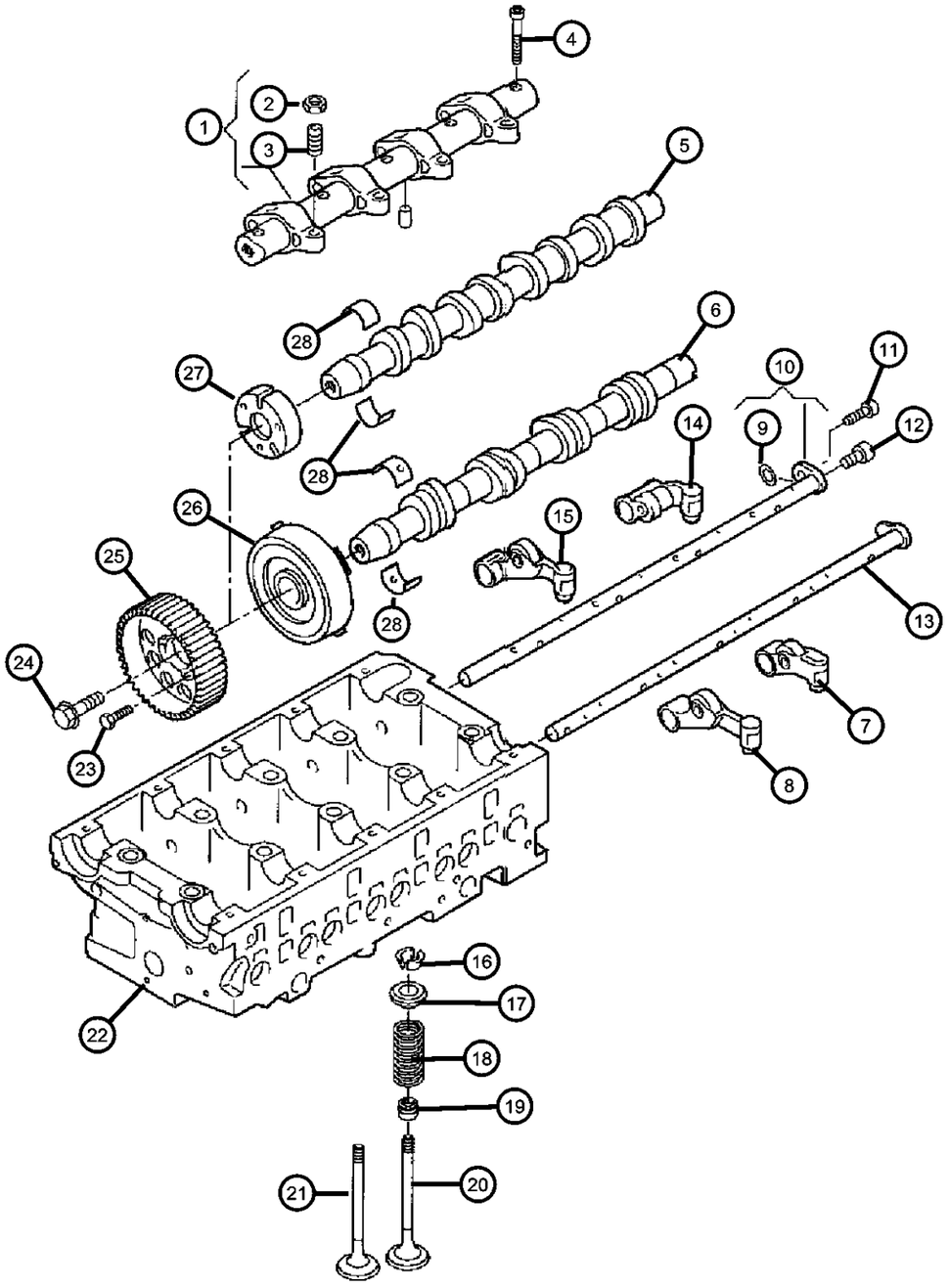

ITEM	PART NUMBER	QTY	LINE	SERIES	BODY	ENGINE	TRANS	TRIM	DESCRIPTION

NOTE:
Sales Codes:
[DAV] = Continuously Variable Transmission
[DEF] = 6-Speed Manual Aisian BG6 Transmission
[DE0] = All 6-Speed Manual Transmissions
[DD0] = All 5-Speed Manual Transmissions
[DD7] = 5-Speed Manual T355 Transmission
[ECD] = 2.0L 4 Cylinder DOHC Diesel 16 Valve Engine
[ED3] = 2.4L 4 Cylinder DOHC 16 Valve Duel VVT Engine
[ED0] = All 2.4L 4 Cylinder Gas Engines
[NAA] = Federal Emissions
[NAE] = California Emisssions
[NAS] = 50 States Emissions
[NA1] = Export Emissions

ITEM	PART NUMBER	QTY	LINE	SERIES	BODY	ENGINE	TRANS	TRIM	DESCRIPTION
1	68001581AA	1	J, T, U			ECD			SHAFT
2	68001581AA	1							NUT, (NOT SERVICED)
3	68001418AA	3	J, T, U			ECD			DOWEL, Cam Plate To Cylinder Head, Mounting
4									BOLT
	68001487AA	1	J, T, U			ECD			Cam Plate To Cylinder Head, Mounting
	68001488AA	3	J, T, U			ECD			Cam Plate To Cylinder Head, Mounting
5	68001572AA	1	J, T, U			ECD			CAMSHAFT
6	68001571AA	1	J, T, U			ECD			CAMSHAFT
7	68001579AA	4	J, T, U			ECD			ARM, Rocker
8	68001580AA	4	J, T, U			ECD			ARM, Rocker
9	68001580AA	4							WASHER, (NOT SERVICED)
10	68001575AA	1	J, T, U			ECD			PIN
11	68001575AA	1							BOLT, (NOT SERVICED)
12	68001348AA	5	J, T, U			ECD			BOLT, Hex Head, Rocker Shaft, Mounting
13	68001576AA	1	J, T, U			ECD			PIN
14	68001578AA	4	J, T, U			ECD			ARM, Rocker
15	68001577AA	4	J, T, U			ECD			ARM, Rocker
16	68001577AA	4							LOCK, Valve Spring Retainer, (NOT SERVICED)
17	68001577AA	4							RETAINER, Valve, (NOT SERVICED)
18	68001584AA	1	J, T, U			ECD			SPRING

COMPASS/PATRIOT (MK)

SERIES	LINE	BODY	ENGINE	TRANSMISSION
H = HIGHLINE L = LOWLINE P = PREMIUM	J = JEEP - 4WD T = JEEP - 2WD	49 = HATCHBACK TYPE #2 74 = SPORT UTILITY 4-DR TYPE #4	ED3 = 2.4L 4 Cyl DOHC 16V Dual VVT Engine	DD7 = 5-Speed Manual T355 Transmission DEF = 6-Speed Manual Aisin BG6 Trans DAV = Continuously Variable Transmission DAW = Cont.Var. w/Off-Rd Crawl Ratio Trans

Camshafts And Valves 2.0L Diesel [ECD]
Figure 2.0LD-510

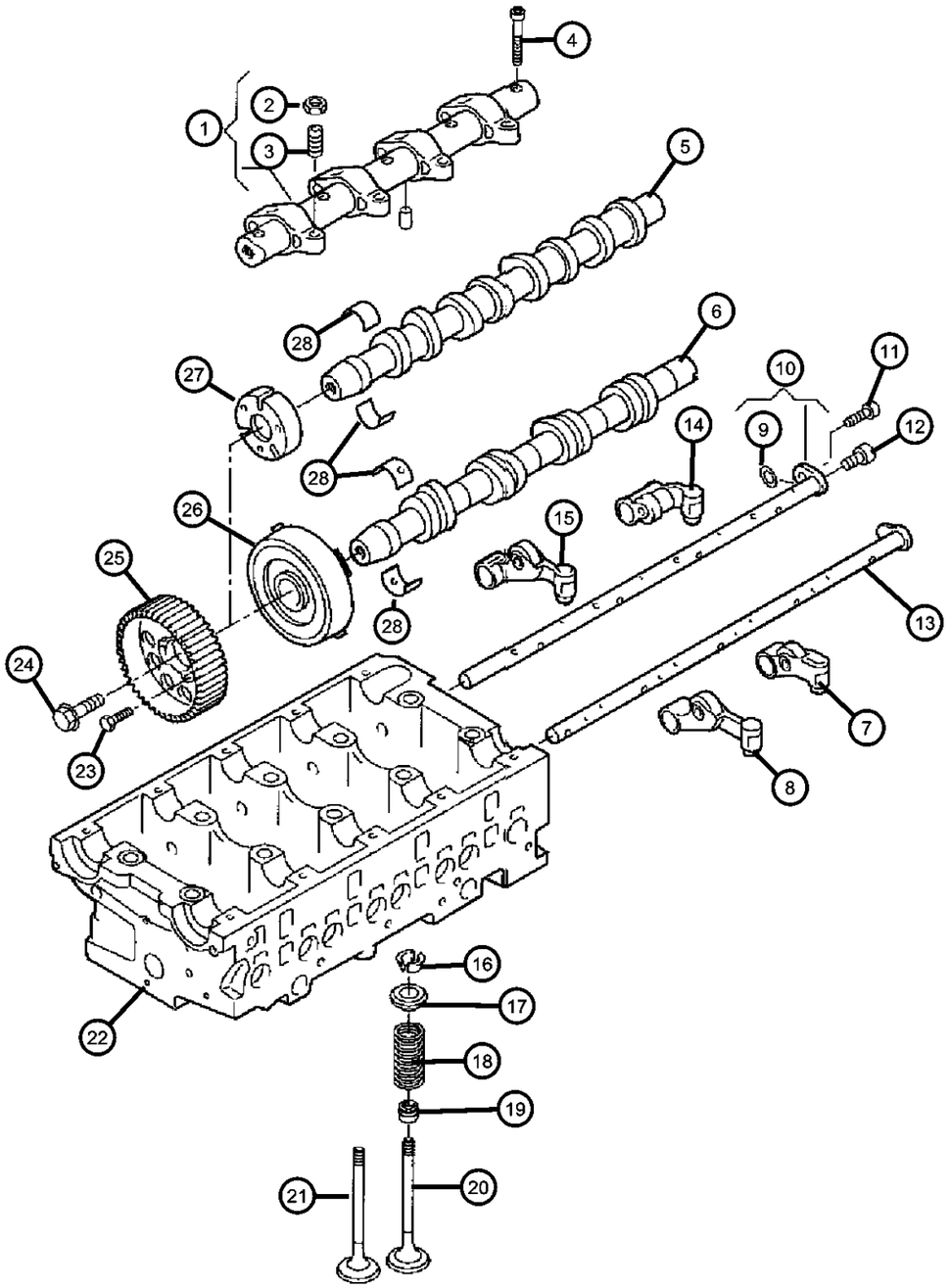

ITEM	PART NUMBER	QTY	LINE	SERIES	BODY	ENGINE	TRANS	TRIM	DESCRIPTION
19	68001551AA	1	J, T, U			ECD			SEAL, Valve Guide
20	68001582AA	8	J, T, U			ECD			VALVE
21	68001583AA	8	J, T, U			ECD			VALVE
22	68001295AA	1	J, T, U			ECD			HEAD, Cylinder
23	68019947AA	10	J, T, U			ECD			SCREW, Cam Plate To Cylinder Head, Mounting
24									BOLT
	68001487AA	1	J, T, U			ECD			
	68001488AA	3	J, T, U			ECD			
25	68001554AA	1	U, J, T			ECD			PULLEY
26	68001573AA	1	J, T, U			ECD			HUB
27	68001574AA	1	J, T, U			ECD			HUB
28									BEARING
	68001565AA	1	J, T, U			ECD			Lower
	68001570AA	1	J, T, U			ECD			Upper
-29	68001570AA	1							PLATE, CAM, (NOT SERVICED)

COMPASS/PATRIOT (MK)

SERIES	LINE	BODY	ENGINE	TRANSMISSION
H = HIGHLINE L = LOWLINE P = PREMIUM	J = JEEP - 4WD T = JEEP - 2WD	49 = HATCHBACK TYPE #2 74 = SPORT UTILITY 4-DR TYPE #4	ED3 = 2.4L 4 Cyl DOHC 16V Dual VVT Engine	DD7 = 5-Speed Manual T355 Transmission DEF = 6-Speed Manual Aisin BG6 Trans DAV = Continuously Variable Transmission DAW = Cont.Var. w/Off-Rd Crawl Ratio Trans

Timing Belt And Covers 2.0L Diesel [ECD]
Figure 2.0LD-610

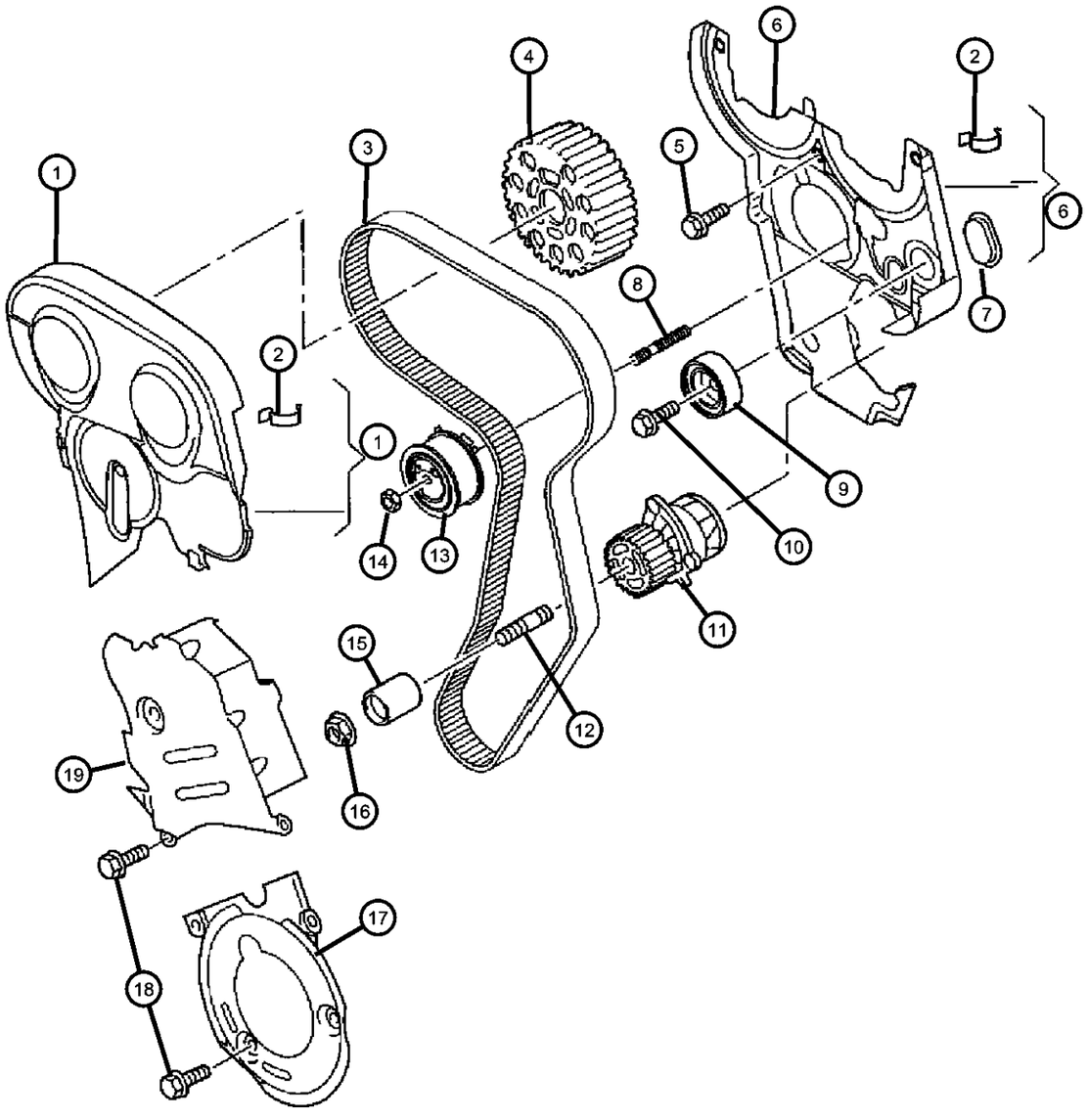

ITEM	PART NUMBER	QTY	LINE	SERIES	BODY	ENGINE	TRANS	TRIM	DESCRIPTION

NOTE:
Sales Codes:
[DAV] = Continuously Variable Transmission
[DEF] = 6-Speed Manual Aisian BG6 Transmission
[DE0] = All 6-Speed Manual Transmissions
[DD0] = All 5-Speed Manual Transmissions
[DD7] = 5-Speed Manual T355 Transmission
[ECD] = 2.0L 4 Cylinder DOHC Diesel 16 Valve Engine
[ED3] = 2.4L 4 Cylinder DOHC 16 Valve Duel VVT Engine
[ED0] = All 2.4L 4 Cylinder Gas Engines
[NAA] = Federal Emissions
[NAE] = California Emisssions
[NAS] = 50 States Emissions
[NA1] = Export Emissions

1	68001308AA	1	J, T, U			ECD			COVER, Timing Belt, Outer Upper
2	68001419AA	3	T, U, J			ECD			CLIP, Upper Front Belt Cover, Retainer
3	68001309AA	1	J, T, U			ECD			BELT, Timing
4	68001554AA	1	J, T, U			ECD			PULLEY
5	68001554AA	1							BOLT, (NOT SERVICED)
6	68000814AA	1				ECD			COVER, Timing Belt, Upper Inner
7	68001338AA	1	J, T, U			ECD			PLUG
8	68001501AA	1	J, T, U			ECD			STUD
9	68000678AA	1				ECD			PULLEY, Idler
10	68001544AA	1	J, T, U			ECD			BOLT
11	68000693AA	1				ECD			PUMP, Water
12	68001310AA	1	J, T, U			ECD			STUD
13	68000816AA	1				ECD			TENSIONER, Belt
14	68001447AA	1	J, T, U			ECD			NUT
15	68000817AA	1				ECD			PULLEY, Idler
16	68001447AA	1	J, T, U			ECD			NUT
17	68000677AA	1				ECD			COVER, Timing Belt
18	68000677AA	1							BOLT, (NOT SERVICED)
19	68002384AA	1	J, T, U			ECD			COVER, Timing Belt, Lower Outer

COMPASS/PATRIOT (MK)

SERIES	LINE	BODY	ENGINE	TRANSMISSION
H = HIGHLINE L = LOWLINE P = PREMIUM	J = JEEP - 4WD T = JEEP - 2WD	49 = HATCHBACK TYPE #2 74 = SPORT UTILITY 4-DR TYPE #4	ED3 = 2.4L 4 Cyl DOHC 16V Dual VVT Engine	DD7 = 5-Speed Manual T355 Transmission DEF = 6-Speed Manual Aisin BG6 Trans DAV = Continuously Variable Transmission DAW = Cont.Var. w/Off-Rd Crawl Ratio Trans

Engine Oilling Pump, Pan, Indicator 2.0L Diesel [ECD]
Figure 2.0LD-710

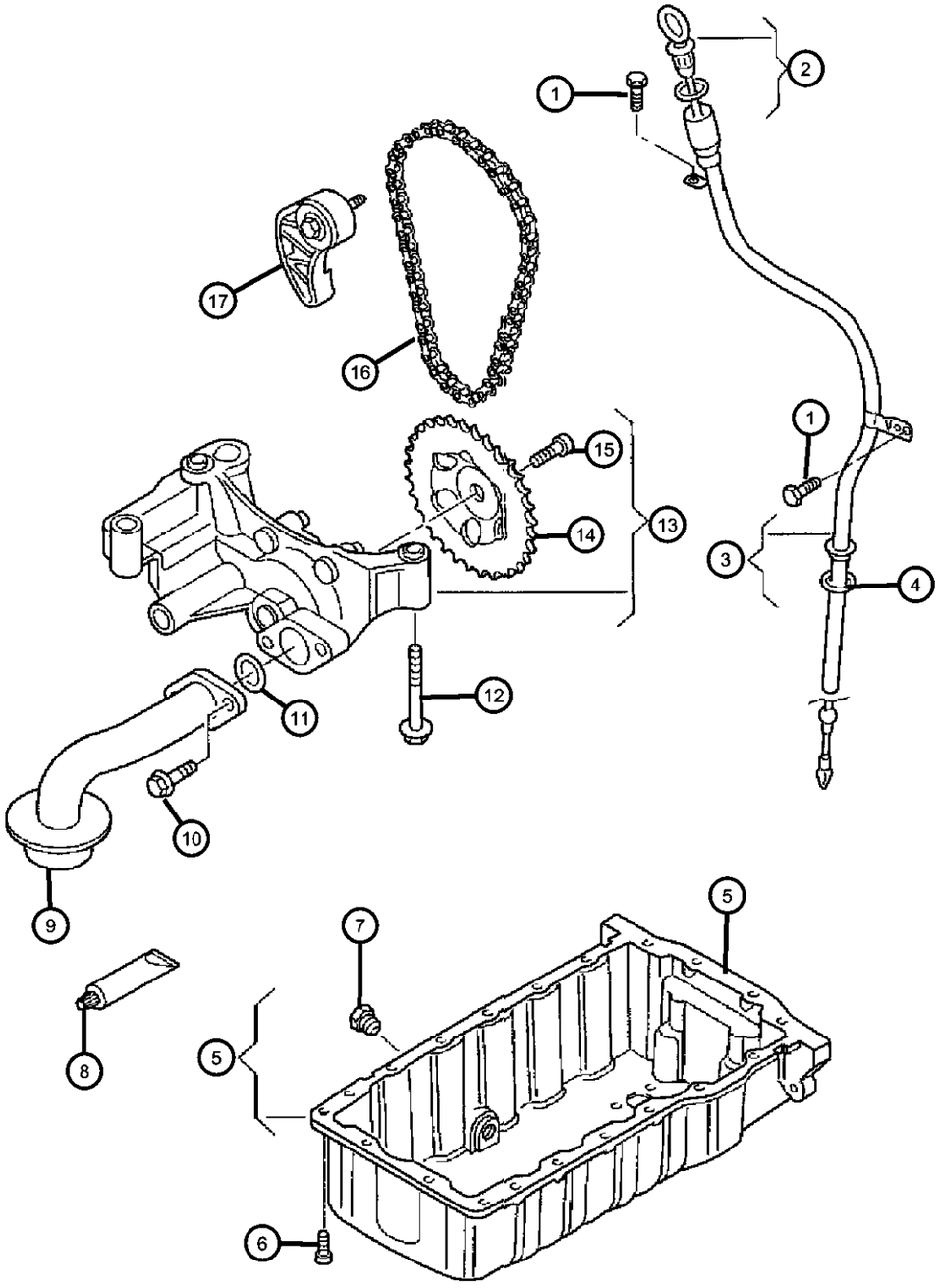

ITEM	PART NUMBER	QTY	LINE	SERIES	BODY	ENGINE	TRANS	TRIM	DESCRIPTION

NOTE:
Refer To Service Manual For Proper Type Of Sealer. Refer To Mopar Vechile Care & Maintenance Products Catalog For Part Number.
Sales Codes:
[DAV] = Continuously Variable Transmission
[DEF] = 6-Speed Manual Aisian BG6 Transmission
[DE0] = All 6-Speed Manual Transmissions
[DD0] = All 5-Speed Manual Transmissions
[DD7] = 5-Speed Manual T355 Transmission
[ECD] = 2.0L 4 Cylinder DOHC Diesel 16 Valve Engine
[ED3] = 2.4L 4 Cylinder DOHC 16 Valve Duel VVT Engine
[ED0] = All 2.4L 4 Cylinder Gas Engines
[NAA] = Federal Emissions
[NAE] = California Emisssions
[NAS] = 50 States Emissions
[NA1] = Export Emissions

1	68002384AA	1							SCREW, (NOT SERVICED)
2	68001460AA	1	J, T, U			ECD			INDICATOR, Engine Oil Level
3	68001138AA	1	J, T, U			ECD			TUBE, Engine Oil Indicator
4	55276821AA	2							SEAL
5	68001342AA	1	J, T, U			ECD			PAN, Engine Oil
6	68001288AA	20	J, T, U			ECD			BOLT, Oil Pan, Mounting
7	68001539AA	1	J, T, U			ECD			PLUG, Drain
8	68001539AA	1							SEALER, See Note, (NOT SERVICED)
9	68000687AA	1				ECD			TUBE, Oil Pickup
10	68000687AA	1							BOLT, (NOT SERVICED)
11	68000687AA	1							O RING, (NOT SERVICED)
12	68001537AA	1	J, T, U			ECD			BOLT
13	68000680AA	1				ECD			PUMP, Engine Oil
14	68000679AA	1				ECD			SPROCKET, Drive
15	68000679AA	1							BOLT, (NOT SERVICED)
16	68000684AA	1				ECD			CHAIN, Pump Drive
17	68000681AA	1				ECD			TENSIONER, Chain

COMPASS/PATRIOT (MK)

SERIES	LINE	BODY	ENGINE	TRANSMISSION
H = HIGHLINE L = LOWLINE P = PREMIUM	J = JEEP - 4WD T = JEEP - 2WD	49 = HATCHBACK TYPE #2 74 = SPORT UTILITY 4-DR TYPE #4	ED3 = 2.4L 4 Cyl DOHC 16V Dual VVT Engine	DD7 = 5-Speed Manual T355 Transmission DEF = 6-Speed Manual Aisin BG6 Trans DAV = Continuously Variable Transmission DAW = Cont.Var. w/Off-Rd Crawl Ratio Trans

Engine Oil Cooler And Filter 2.0L Diesel [ECD]
Figure 2.0LD-720

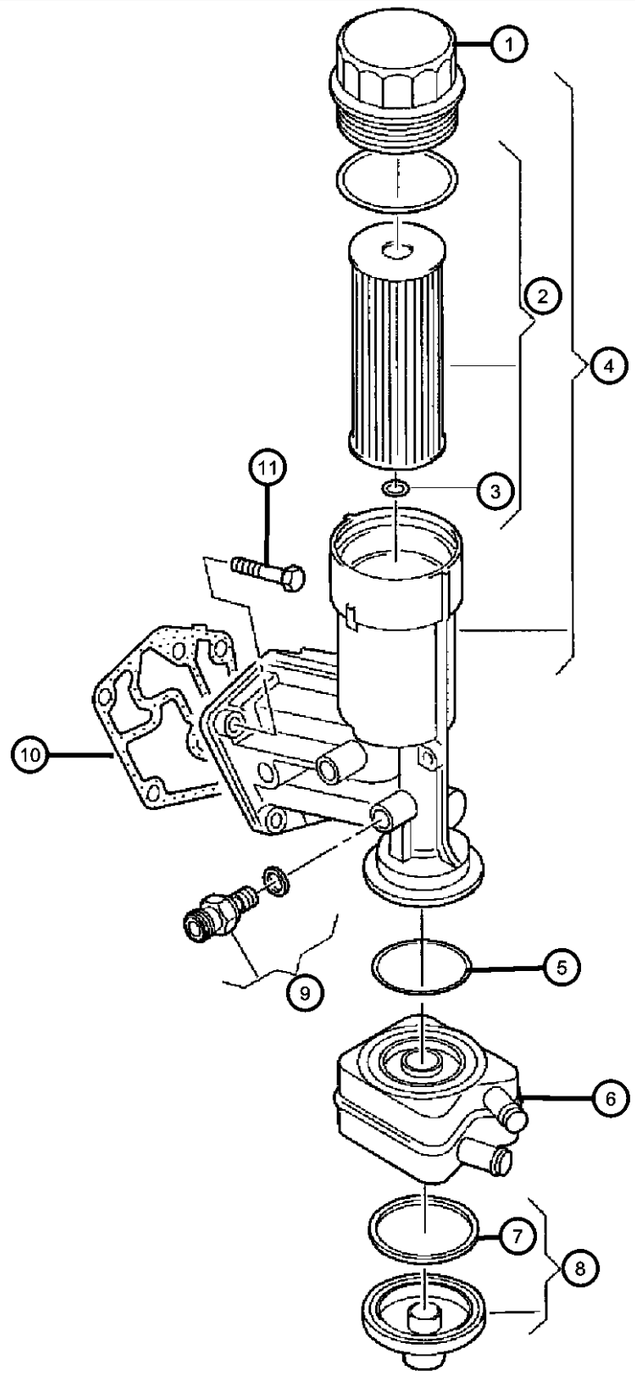

ITEM	PART NUMBER	QTY	LINE	SERIES	BODY	ENGINE	TRANS	TRIM	DESCRIPTION

NOTE:
Sales Codes:
[DAV] = Continuously Variable Transmission
[DEF] = 6-Speed Manual Aisian BG6 Transmission
[DE0] = All 6-Speed Manual Transmissions
[DD0] = All 5-Speed Manual Transmissions
[DD7] = 5-Speed Manual T355 Transmission
[ECD] = 2.0L 4 Cylinder DOHC Diesel 16 Valve Engine
[ED3] = 2.4L 4 Cylinder DOHC 16 Valve Duel VVT Engine
[ED0] = All 2.4L 4 Cylinder Gas Engines
[NAA] = Federal Emissions
[NAE] = California Emisssions
[NAS] = 50 States Emissions
[NA1] = Export Emissions

ITEM	PART NUMBER	QTY	LINE	SERIES	BODY	ENGINE	TRANS	TRIM	DESCRIPTION
1	68001473AA	1	J, T, U			ECD			CAP, Oil Filter Housing
2	68001297AA	1	J, T, U			ECD			FILTER, Engine Oil
3	68001298AA	1	J, T, U			ECD			O RING
4	68001341AA	1	J, T, U			ECD			HOUSING, Oil Filter
5	68000691AA	1				ECD			O RING, Oil Cooler
6	68000688AA	1				ECD			COOLER, Engine Oil
7	68000690AA	1				ECD			GASKET, Engine Oil Cooler
8	68000689AA	1				ECD			COVER, Engine Oil Cooler
9									SWITCH, Oil Pressure
	68028946AA	1	J, T, U			ECD			[49]
		1	J, T, U			ECD			[74]
10	68001474AA	1	J, T, U			ECD			GASKET, Oil Filter Housing
11	68001540AA	4	J, T, U			ECD			BOLT, Oil Filter Housing, Mounting

COMPASS/PATRIOT (MK)

SERIES	LINE	BODY	ENGINE	TRANSMISSION
H = HIGHLINE L = LOWLINE P = PREMIUM	J = JEEP - 4WD T = JEEP - 2WD	49 = HATCHBACK TYPE #2 74 = SPORT UTILITY 4-DR TYPE #4	ED3 = 2.4L 4 Cyl DOHC 16V Dual VVT Engine	DD7 = 5-Speed Manual T355 Transmission DEF = 6-Speed Manual Aisin BG6 Trans DAV = Continuously Variable Transmission DAW = Cont.Var. w/Off-Rd Crawl Ratio Trans

Intake Manifold 2.0L Diesel [ECD]
Figure 2.0LD-810

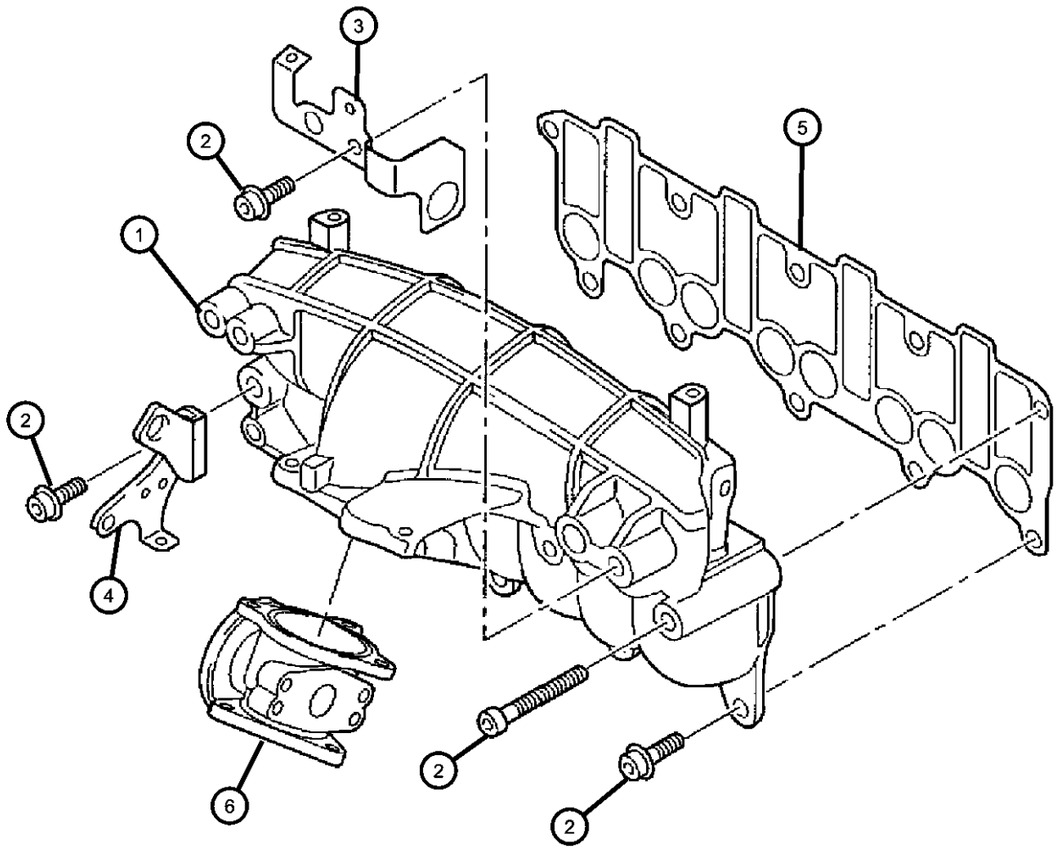

ITEM	PART NUMBER	QTY	LINE	SERIES	BODY	ENGINE	TRANS	TRIM	DESCRIPTION

NOTE:
Sales Codes:
[DAV] = Continuously Variable Transmission
[DEF] = 6-Speed Manual Aisian BG6 Transmission
[DE0] = All 6-Speed Manual Transmissions
[DD0] = All 5-Speed Manual Transmissions
[DD7] = 5-Speed Manual T355 Transmission
[ECD] = 2.0L 4 Cylinder DOHC Diesel 16 Valve Engine
[ED3] = 2.4L 4 Cylinder DOHC 16 Valve Duel VVT Engine
[ED0] = All 2.4L 4 Cylinder Gas Engines
[NAA] = Federal Emissions
[NAE] = California Emisssions
[NAS] = 50 States Emissions
[NA1] = Export Emissions

1	68001461AA	1	J, T, U		ECD	MANIFOLD, Intake
2	68001461AA	1				BOLT, (NOT SERVICED)
3	68001459AA	1	J, T, U		ECD	BRACKET
4	68001453AA	1	J, T, U		ECD	BRACKET
5	68001462AA	1	J, T, U		ECD	GASKET, Intake Manifold
6	68001558AA	1	J, T, U		ECD	VALVE

COMPASS/PATRIOT (MK)

SERIES	LINE	BODY	ENGINE	TRANSMISSION
H = HIGHLINE L = LOWLINE P = PREMIUM	J = JEEP - 4WD T = JEEP - 2WD	49 = HATCHBACK TYPE #2 74 = SPORT UTILITY 4-DR TYPE #4	ED3 = 2.4L 4 Cyl DOHC 16V Dual VVT Engine	DD7 = 5-Speed Manual T355 Transmission DEF = 6-Speed Manual Aisin BG6 Trans DAV = Continuously Variable Transmission DAW = Cont.Var. w/Off-Rd Crawl Ratio Trans

Exhaust Manifold And Turbo Charger 2.0L Diesel [ECD]
Figure 2.0LD-820

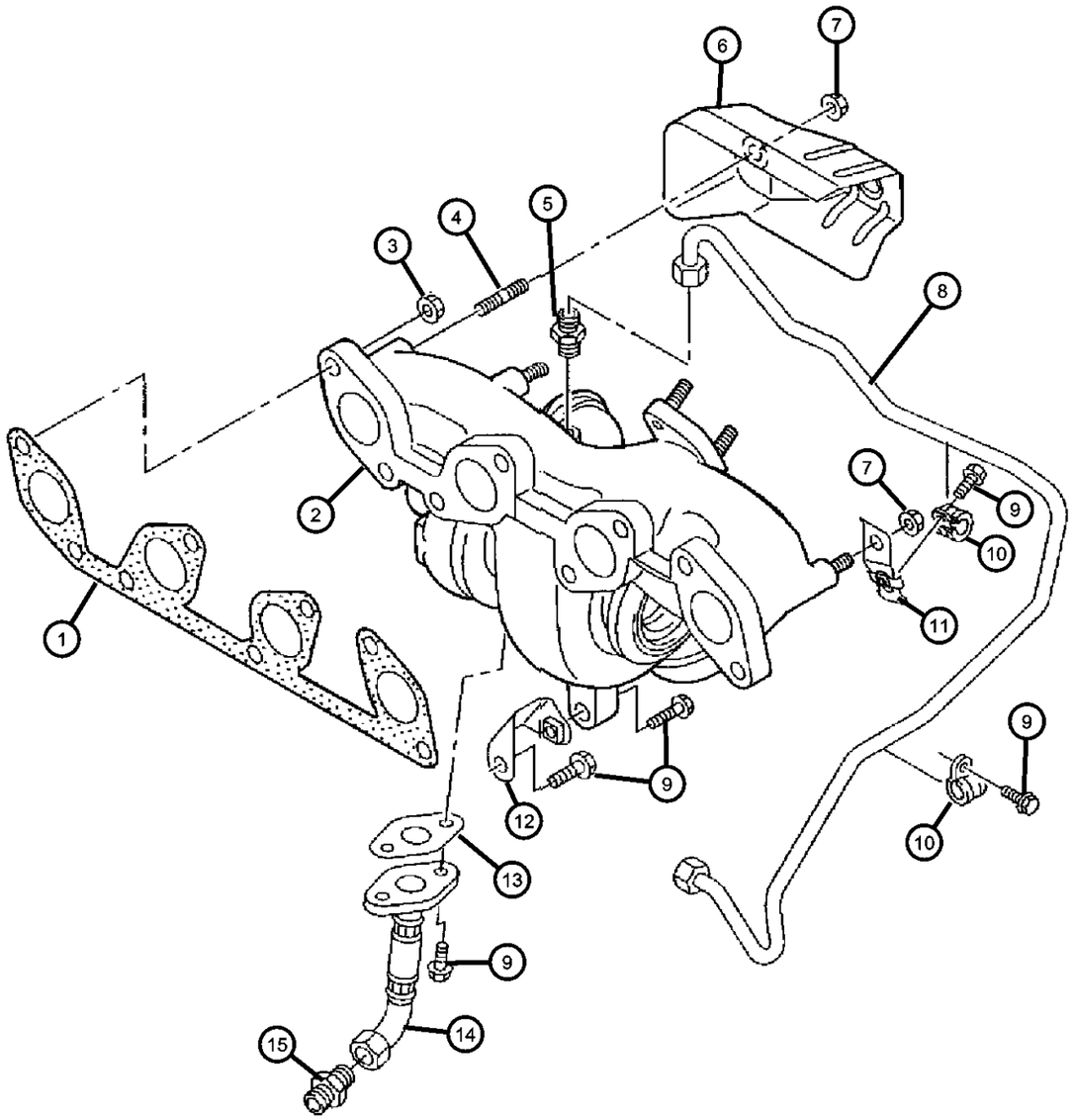

ITEM	PART NUMBER	QTY	LINE	SERIES	BODY	ENGINE	TRANS	TRIM	DESCRIPTION

NOTE:
Sales Codes:
[DAV] = Continuously Variable Transmission
[DEF] = 6-Speed Manual Aisian BG6 Transmission
[DE0] = All 6-Speed Manual Transmissions
[DD0] = All 5-Speed Manual Transmissions
[DD7] = 5-Speed Manual T355 Transmission
[ECD] = 2.0L 4 Cylinder DOHC Diesel 16 Valve Engine
[ED3] = 2.4L 4 Cylinder DOHC 16 Valve Duel VVT Engine
[ED0] = All 2.4L 4 Cylinder Gas Engines
[NAA] = Federal Emissions
[NAE] = California Emisssions
[NAS] = 50 States Emissions
[NA1] = Export Emissions

1	68000634AA	1				ECD			GASKET, Exhaust Manifold
2	68000633AA	1				ECD			MANIFOLD/TURBOCHARGER, Exhaust
3	68001525AA	3	J, T, U			ECD			NUT, Exhaust Manifold, Mounting
4	68001524AA	8	J, T, U			ECD			STUD, Exhaust Manifold, Mounting
5	68001422AA	1	J, T, U			ECD			CONNECTOR, Oil Line
6	68000911AA	1				ECD			SHIELD, Exhaust Manifold
7	68000911AA	1							NUT, (NOT SERVICED)
8	68001464AA	1	J, T, U			ECD			TUBE, Oil Feed
9	68001464AA	1							BOLT, (NOT SERVICED)
10	68001535AA	2	J, T, U			ECD			CLAMP
11	68001465AA	1	J, T, U			ECD			BRACKET, Exhaust Manifold
12	68001302AA	1	J, T, U			ECD			SUPPORT
13	68001420AA	1	J, T, U			ECD			GASKET, Oil Line
14	68001303AA	1	J, T, U			ECD			TUBE
15	68001541AA	1	J, T, U			ECD			CONNECTOR

COMPASS/PATRIOT (MK)

SERIES	LINE	BODY	ENGINE	TRANSMISSION
H = HIGHLINE L = LOWLINE P = PREMIUM	J = JEEP - 4WD T = JEEP - 2WD	49 = HATCHBACK TYPE #2 74 = SPORT UTILITY 4-DR TYPE #4	ED3 = 2.4L 4 Cyl DOHC 16V Dual VVT Engine	DD7 = 5-Speed Manual T355 Transmission DEF = 6-Speed Manual Aisin BG6 Trans DAV = Continuously Variable Transmission DAW = Cont.Var. w/Off-Rd Crawl Ratio Trans

Crankcase Ventilation 2.0L Diesel [ECD]
Figure 2.0LD-910

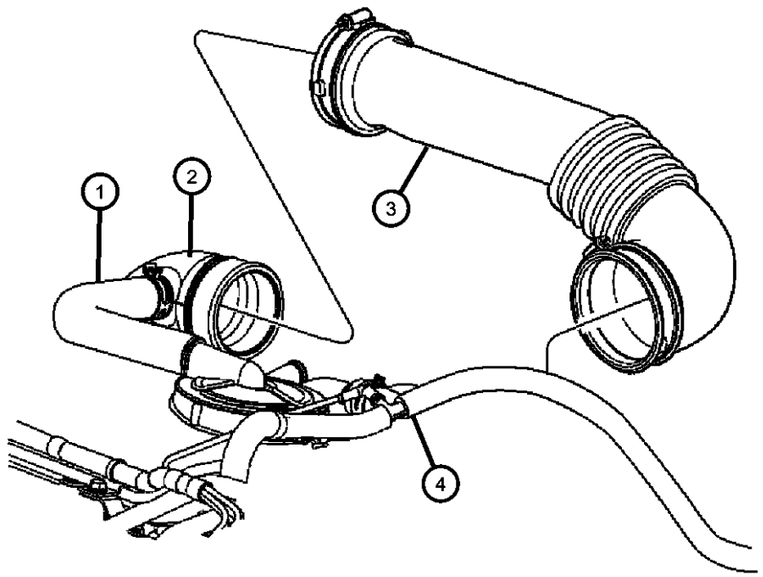

ITEM	PART NUMBER	QTY	LINE	SERIES	BODY	ENGINE	TRANS	TRIM	DESCRIPTION

NOTE:
Sales Codes:
[DAV] = Continuously Variable Transmission
[DEF] = 6-Speed Manual Aisian BG6 Transmission
[DE0] = All 6-Speed Manual Transmissions
[DD0] = All 5-Speed Manual Transmissions
[DD7] = 5-Speed Manual T355 Transmission
[ECD] = 2.0L 4 Cylinder DOHC Diesel 16 Valve Engine
[ED3] = 2.4L 4 Cylinder DOHC 16 Valve Duel VVT Engine
[ED0] = All 2.4L 4 Cylinder Gas Engines
[NAA] = Federal Emissions
[NAE] = California Emisssions
[NAS] = 50 States Emissions
[NA1] = Export Emissions

1	04891745AA	1				ECD			HOSE, Make Up Air
2	04891634AC	1				ECD			HOSE, Clean Air
3	04891794AA	1				ECD			HOSE, Clean Air
4	05105157AF	1	U						HOSE, Vacuum Supply

COMPASS/PATRIOT (MK)

SERIES	LINE	BODY	ENGINE	TRANSMISSION
H = HIGHLINE L = LOWLINE P = PREMIUM	J = JEEP - 4WD T = JEEP - 2WD	49 = HATCHBACK TYPE #2 74 = SPORT UTILITY 4-DR TYPE #4	ED3 = 2.4L 4 Cyl DOHC 16V Dual VVT Engine	DD7 = 5-Speed Manual T355 Transmission DEF = 6-Speed Manual Aisin BG6 Trans DAV = Continuously Variable Transmission DAW = Cont.Var. w/Off-Rd Crawl Ratio Trans

Group - 11

Exhaust

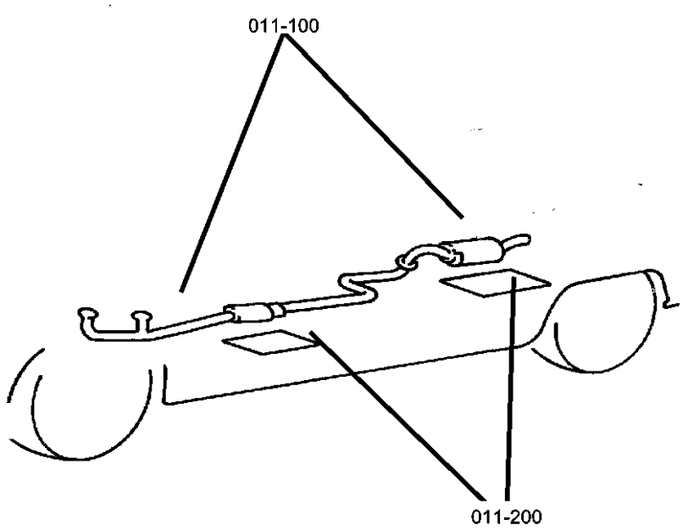

011-100 Exhaust System 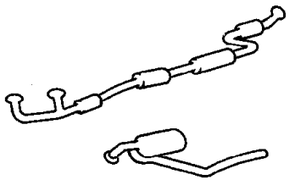	**011-200** Heat Shields 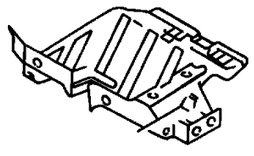		

Group - 11 Exhaust

Illustration Title — Group-Fig. No.

Exhaust System
Exhaust System, 2.4L [ED3] ..... Fig. 11 - 110
Exhaust System 2.0L Diesel [ECD] ..... Fig. 11 - 120

Heat Shields
Heat Shields - Exhaust, All Engines ..... Fig. 11 - 210

Exhaust System, 2.4L [ED3]
Figure 11-110

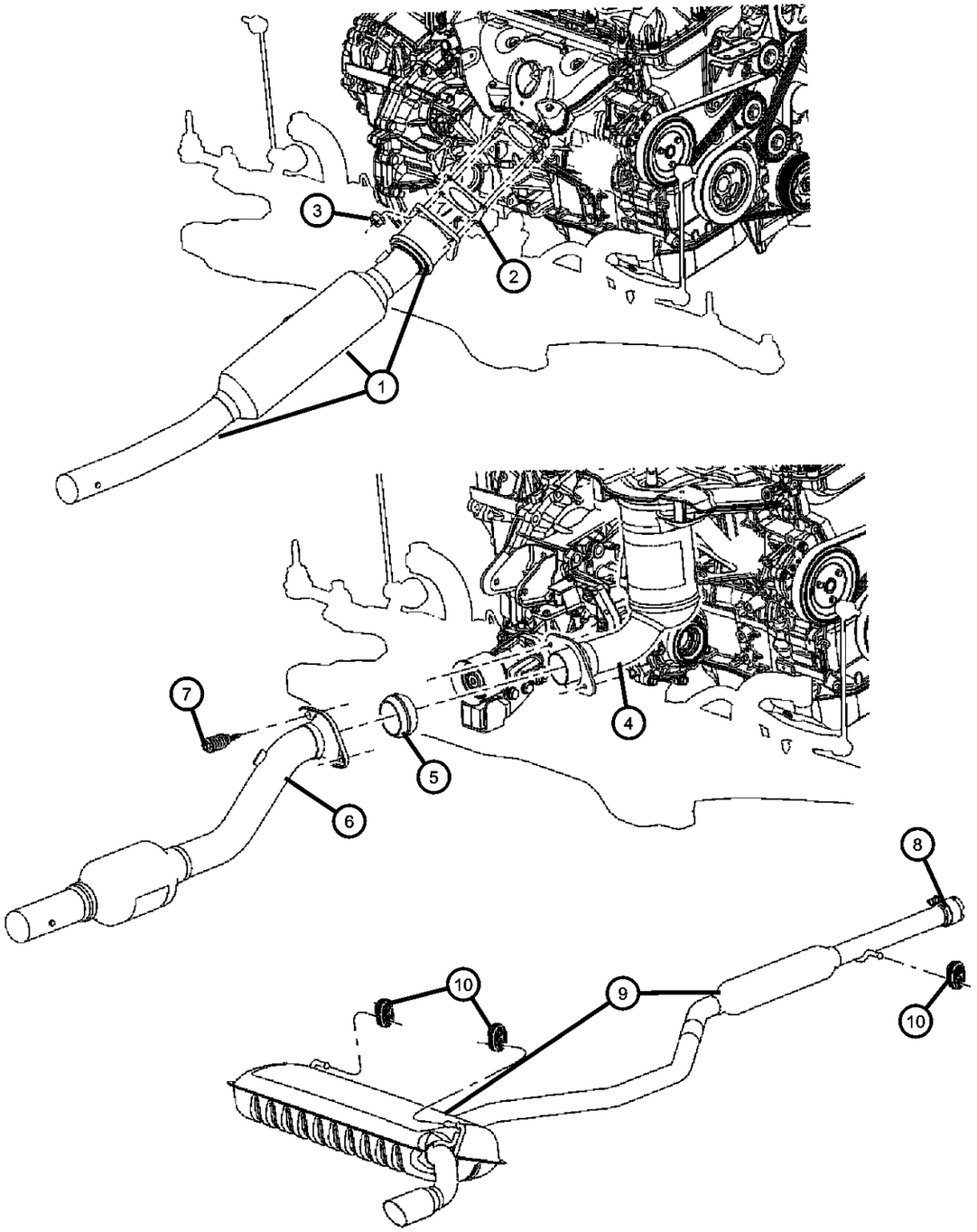

ITEM	PART NUMBER	QTY	LINE	SERIES	BODY	ENGINE	TRANS	TRIM	DESCRIPTION
Sales Codes:									
[ED3] = 2.4L 4 Cylinder DOHC 16 Valve Dual VVT									
1	05105049AB	1	T		49, 74	ED3			CONVERTER, Catalytic, W/PIPES
2	04616671AB	1	T		49, 74	ED3			GASKET, Catalytic Converter, 4-BOLT GASKET AIRAMIDE
3	06104709AA	2				ED3			NUT, M8, FWD-CAT CONVERTER TO MANIFOLD
4	05105460AC	1				ED3			MANIFOLD, Exhaust and Catalytic Converter, Maniverter, 4WD ONLY
5	05105615AB	1				ED3			GASKET, Catalytic Converter, METEX JOINT SEAL
6	05105131AB	1				ED3			CONVERTER, Catalytic, 4WD-UNDERFLOOR
7	05105616AA	2				ED3			BOLT, Spring, 4WD-CATALYTIC CONV TO MANIVERTER
8	04695220AB	1				ED3			CLAMP, Exhaust, CONVERTER TO MUFFLER
9									MUFFLER AND TAILPIPE, Exhaust
	05105123AE	1	T		49, 74	ED3			FWD EXHAUST MODULE
	05105125AB	1				ED3			AWD EXHAUST MODULE
10									ISOLATOR, Exhaust
	05105110AB	2							MUFFLER TO BODY
		1							I-PIPE TO BODY

COMPASS/PATRIOT (MK)

SERIES	LINE	BODY	ENGINE	TRANSMISSION
H = HIGHLINE L = LOWLINE P = PREMIUM	J = JEEP - 4WD T = JEEP - 2WD	49 = HATCHBACK TYPE #2 74 = SPORT UTILITY 4-DR TYPE #4	ED3 = 2.4L 4 Cyl DOHC 16V Dual VVT Engine	DD7 = 5-Speed Manual T355 Transmission DEF = 6-Speed Manual Aisin BG6 Trans DAV = Continuously Variable Transmission DAW = Cont.Var. w/Off-Rd Crawl Ratio Trans

Exhaust System 2.0L Diesel [ECD]
Figure 11-120

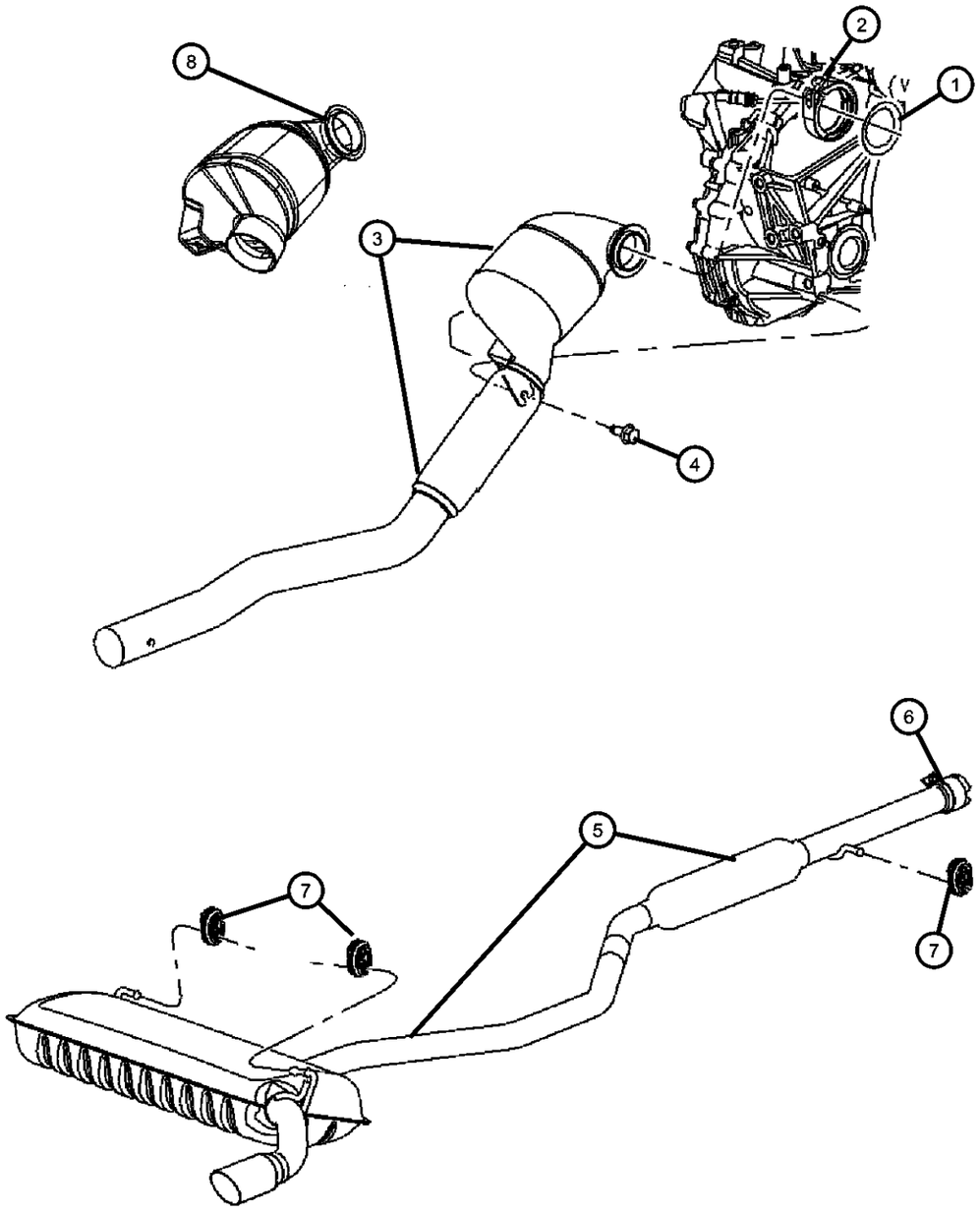

ITEM	PART NUMBER	QTY	LINE	SERIES	BODY	ENGINE	TRANS	TRIM	DESCRIPTION
1	05105630AA	1	J, U		49, 74	ECD			GASKET, Exhaust Manifold to Front Converter, 4WD
2	05105634AA	1	J, U		49, 74	ECD			CLAMP, Exhaust, CATALY/CONV TO TURBO CHARGER OUTLET
3	05105452AB	1	J, T, U		49, 74	ECD			CONVERTER, Catalytic, EXPORT EMISSION
4	06105048AA	2							SCREW
5	05105675AC	1	J, U		49, 74	ECD			MUFFLER AND TAILPIPE, Exhaust
6	04695220AB	1				ECD			CLAMP, Exhaust
7	05105110AB	2							ISOLATOR, Exhaust, I-PIPE TO BODY
8	68001291AA	1	J, T, U		49, 74	ECD			CONVERTER, Catalytic, POWER TRAIN PART MODULE

COMPASS/PATRIOT (MK)

SERIES	LINE	BODY	ENGINE	TRANSMISSION
H = HIGHLINE L = LOWLINE P = PREMIUM	J = JEEP - 4WD T = JEEP - 2WD	49 = HATCHBACK TYPE #2 74 = SPORT UTILITY 4-DR TYPE #4	ED3 = 2.4L 4 Cyl DOHC 16V Dual VVT Engine	DD7 = 5-Speed Manual T355 Transmission DEF = 6-Speed Manual Aisin BG6 Trans DAV = Continuously Variable Transmission DAW = Cont.Var. w/Off-Rd Crawl Ratio Trans

AR = use ase required - = Non illustrrated part

Heat Shields - Exhaust, All Engines
Figure 11-210

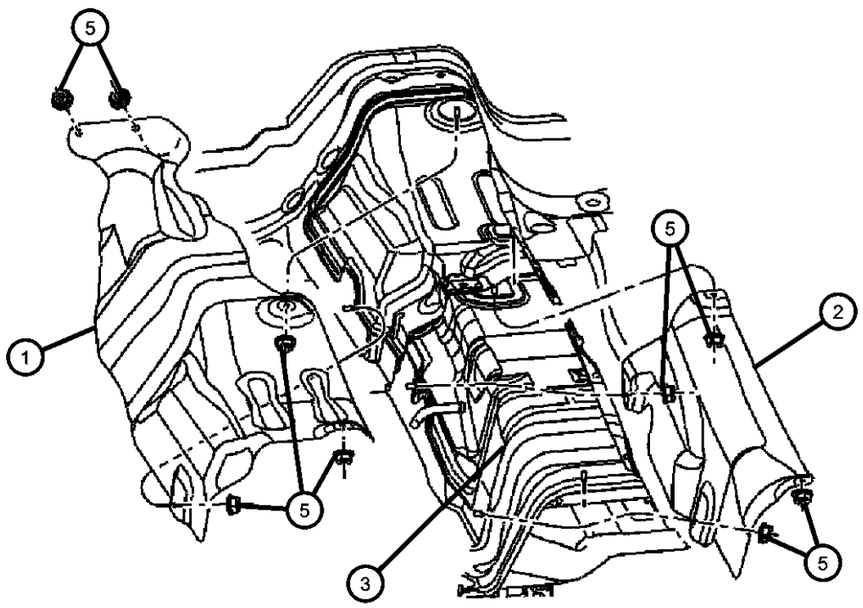

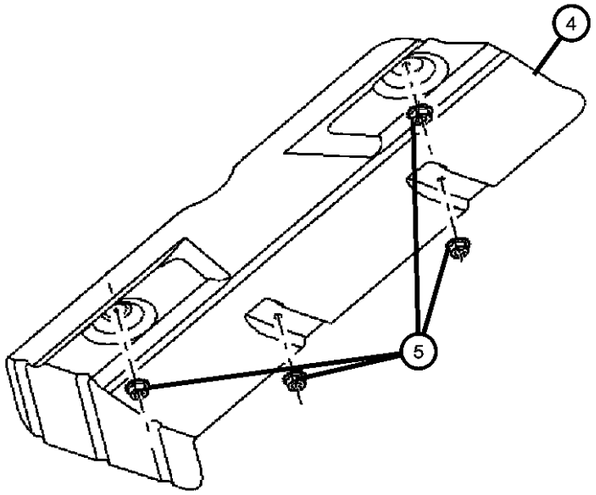

ITEM	PART NUMBER	QTY	LINE	SERIES	BODY	ENGINE	TRANS	TRIM	DESCRIPTION
1	05155473AA	1							SHIELD, Heat
2	04673701AA	1							SHIELD, Heat
3	05115768AA	1				ECD			SILENCER, Tunnel
4	04673702AA	1							SHIELD, Heat
5	05096978AA	1							NUT, Hex, M6
-6	04673697AA	1							SHIELD, Heat

COMPASS/PATRIOT (MK)

SERIES	LINE	BODY	ENGINE	TRANSMISSION
H = HIGHLINE L = LOWLINE P = PREMIUM	J = JEEP - 4WD T = JEEP - 2WD	49 = HATCHBACK TYPE #2 74 = SPORT UTILITY 4-DR TYPE #4	ED3 = 2.4L 4 Cyl DOHC 16V Dual VVT Engine	DD7 = 5-Speed Manual T355 Transmission DEF = 6-Speed Manual Aisin BG6 Trans DAV = Continuously Variable Transmission DAW = Cont.Var. w/Off-Rd Crawl Ratio Trans

AR = use ase required - = Non illustrrated part

Group - 13

Frames and Bumpers

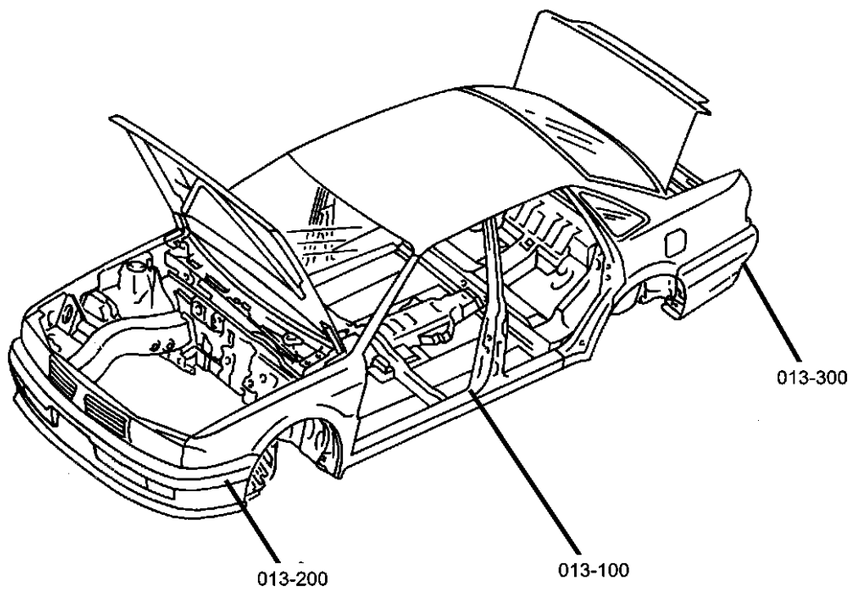

013-100 Frames	013-200 Front Bumper and Fascia	013-300 Rear Bumper and Fascia	
	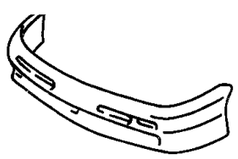		

Group - 13 Frames and Bumpers

Illustration Title — Group-Fig. No.

Frames

Frame, Front ..... Fig. 13 - 110
Frame, Rear ..... Fig. 13 - 120

Front Bumper and Fascia

49 - Fascia, Front ..... Fig. 13 - 210
74 - Fascia, Front ..... Fig. 13 - 220

Rear Bumper and Fascia

49 - Fascia, Rear ..... Fig. 13 - 310
74 - Fascia, Rear ..... Fig. 13 - 320

Frame, Front
Figure 13-110

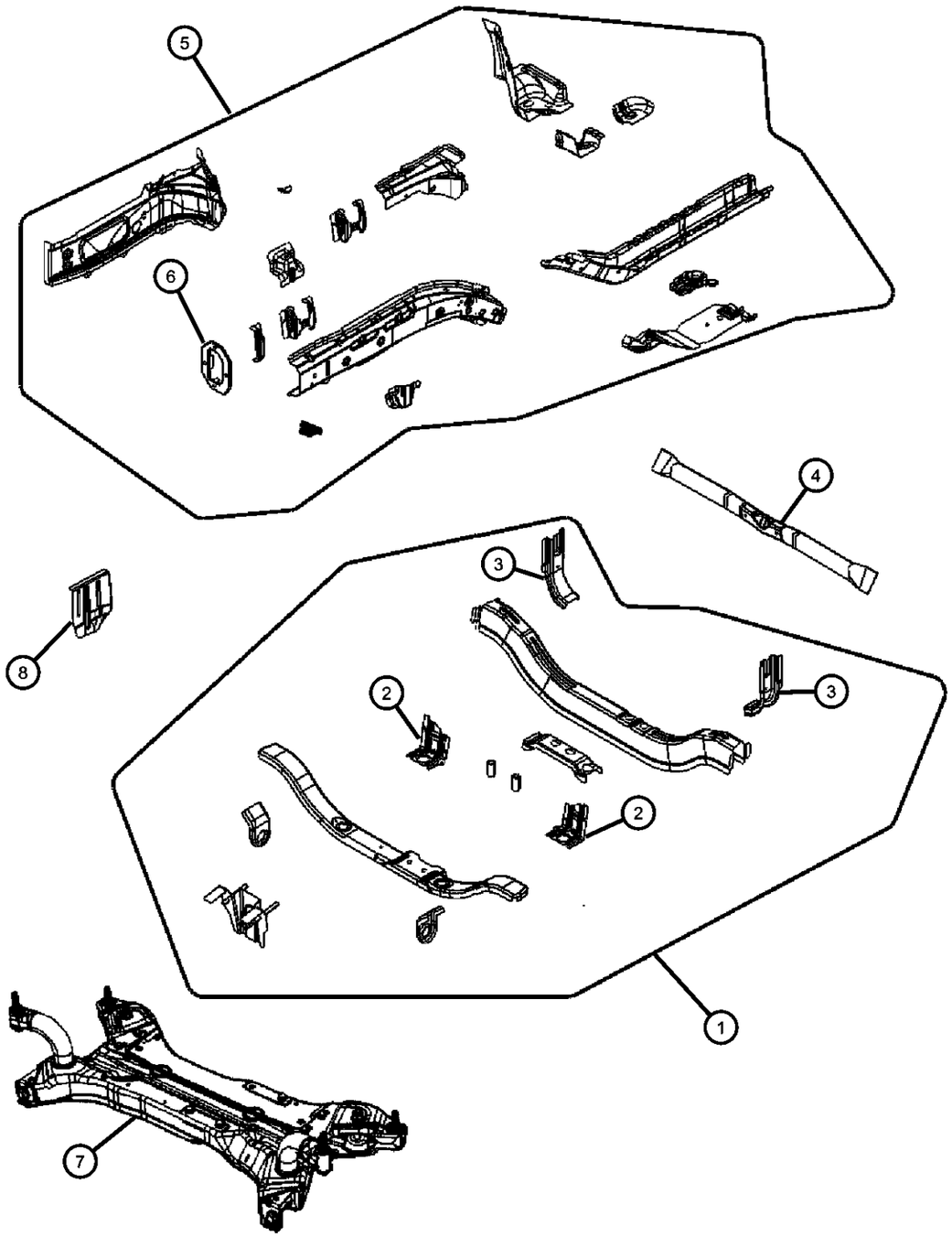

ITEM	PART NUMBER	QTY	LINE	SERIES	BODY	ENGINE	TRANS	TRIM	DESCRIPTION
1	05115402AA	1							CROSSMEMBER, Front Side Rail, Lower
2									BRACKET, Radiator Support
	05115410AA	1							Right
	05115411AA	1							Left
3	05115399AA	2							BRACE, Front Crossmember
4									CROSSMEMBER, Radiator Closure Panel, Upper
	05115951AA	1	J, T, U		49				
	05160194AA	1	J, T, U		74				
5									RAIL, Frame Front
	05074802AE	1	J, T, U		49, 74				Right
	05074803AE	1	J, T, U		49, 74				Left
6									REINFORCEMENT, Front Bumper Side Rail
	05115347AA	1							Left
	05115346AA	1							Right
7	05105623AA	1							CROSSMEMBER, Front Suspension
8									CAP, Rail
	05115314AA	1	J, T, U		74, 49				Up to 9/1/06, Right
	05115314AB	1	J, T, U		49, 74				After 9/1/06, Right
	05115315AA	1	J, T, U		49, 74				Up to 9/1/06, Left
	05115315AB	1	T, U, J		49, 74				After 9/1/06, Left
-9	06508844AA	4	J		49				BOLT, Hex Head, Crossmember to Body, [M14x1.50x98]

COMPASS/PATRIOT (MK)

SERIES	LINE	BODY	ENGINE	TRANSMISSION
H = HIGHLINE	J = JEEP - 4WD	49 = HATCHBACK TYPE #2	ED3 = 2.4L 4 Cyl DOHC 16V Dual VVT Engine	DD7 = 5-Speed Manual T355 Transmission
L = LOWLINE	T = JEEP - 2WD	74 = SPORT UTILITY 4-DR TYPE #4		DEF = 6-Speed Manual Aisin BG6 Trans
P = PREMIUM				DAV = Continuously Variable Transmission
				DAW = Cont.Var. w/Off-Rd Crawl Ratio Trans

Frame, Rear
Figure 13-120

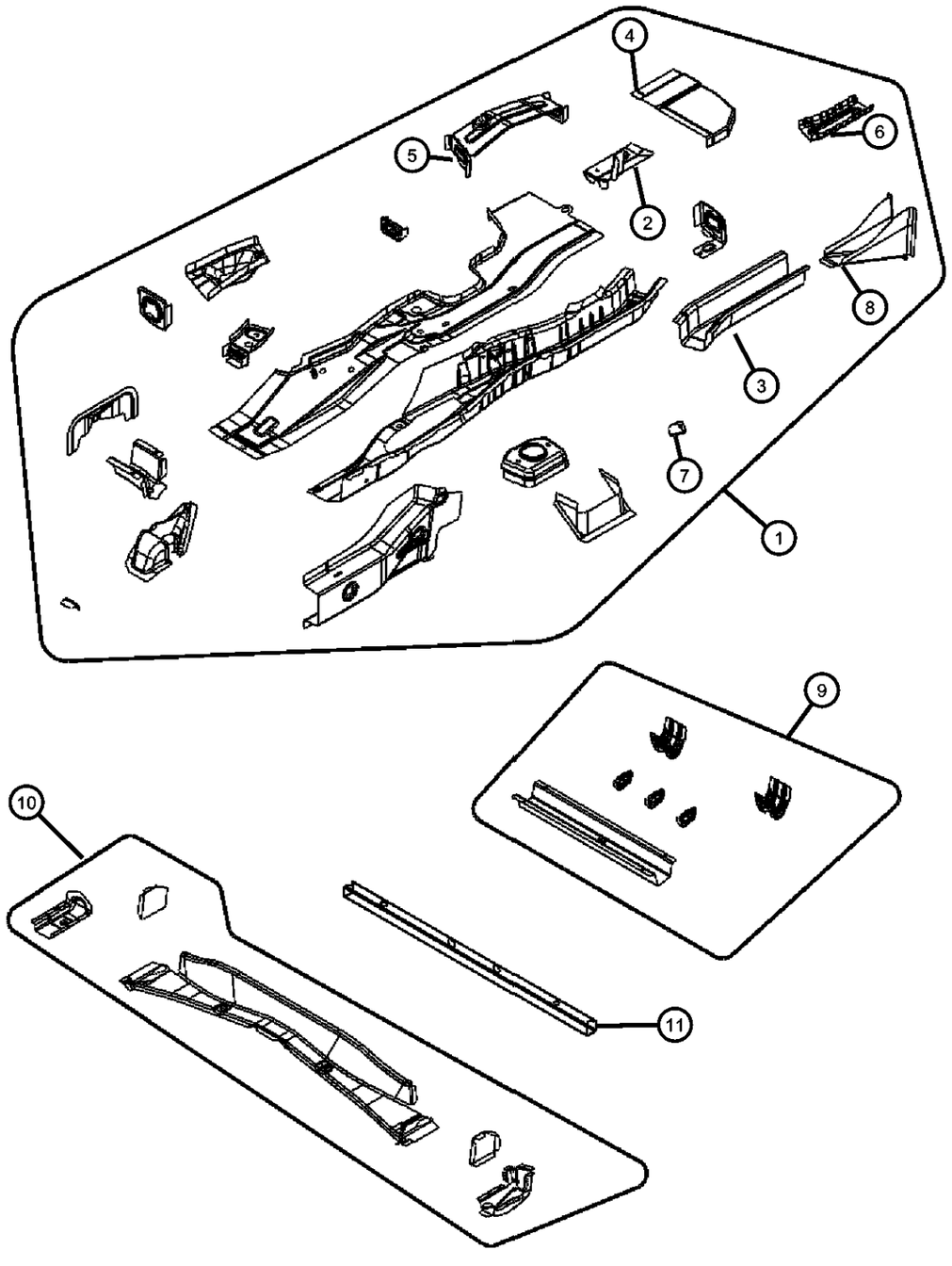

ITEM	PART NUMBER	QTY	LINE	SERIES	BODY	ENGINE	TRANS	TRIM	DESCRIPTION
1									SIDEMEMBER, Floor
	05115273AD	1	J, T, U		49, 74				Left
	05115272AD	1	J, T, U		49, 74				Right
2									EXTENSION, Rear Floor Sidemember
	05160250AA	1	J, T, U		49, 74				Right
	05160251AA	1	J, T, U		49, 74				Left
3									EXTENSION, Rear Floor Pan
	05115206AA	1							Right
	05115207AA	1							Left
4									REINFORCEMENT, Rear Floor Sidemember
	05115524AA	1							Right
	05115525AA	1							Left
5									REINFORCEMENT, Rear Floor Pan
	05115496AA	1							Right
	05115497AA	1							Left
6									EXTENSION, Rear Rail
	68025688AA	1	J, T, U		49, 74				Right
	68025689AA	1	J, T, U		49, 74				Left
7	06101916	1							NUT, Hex Weld, M8x1.25
8	05115538AA	1							CROSSMEMBER, Rear Floor
9	05115549AA	1							CROSSMEMBER, Rear Seat
10	05115657AB	1							BEAM ASSY, Side Impact

COMPASS/PATRIOT (MK)

SERIES	LINE	BODY	ENGINE	TRANSMISSION
H = HIGHLINE L = LOWLINE P = PREMIUM	J = JEEP - 4WD T = JEEP - 2WD	49 = HATCHBACK TYPE #2 74 = SPORT UTILITY 4-DR TYPE #4	ED3 = 2.4L 4 Cyl DOHC 16V Dual VVT Engine	DD7 = 5-Speed Manual T355 Transmission DEF = 6-Speed Manual Aisin BG6 Trans DAV = Continuously Variable Transmission DAW = Cont.Var. w/Off-Rd Crawl Ratio Trans

49 - Fascia, Front
Figure 13-210

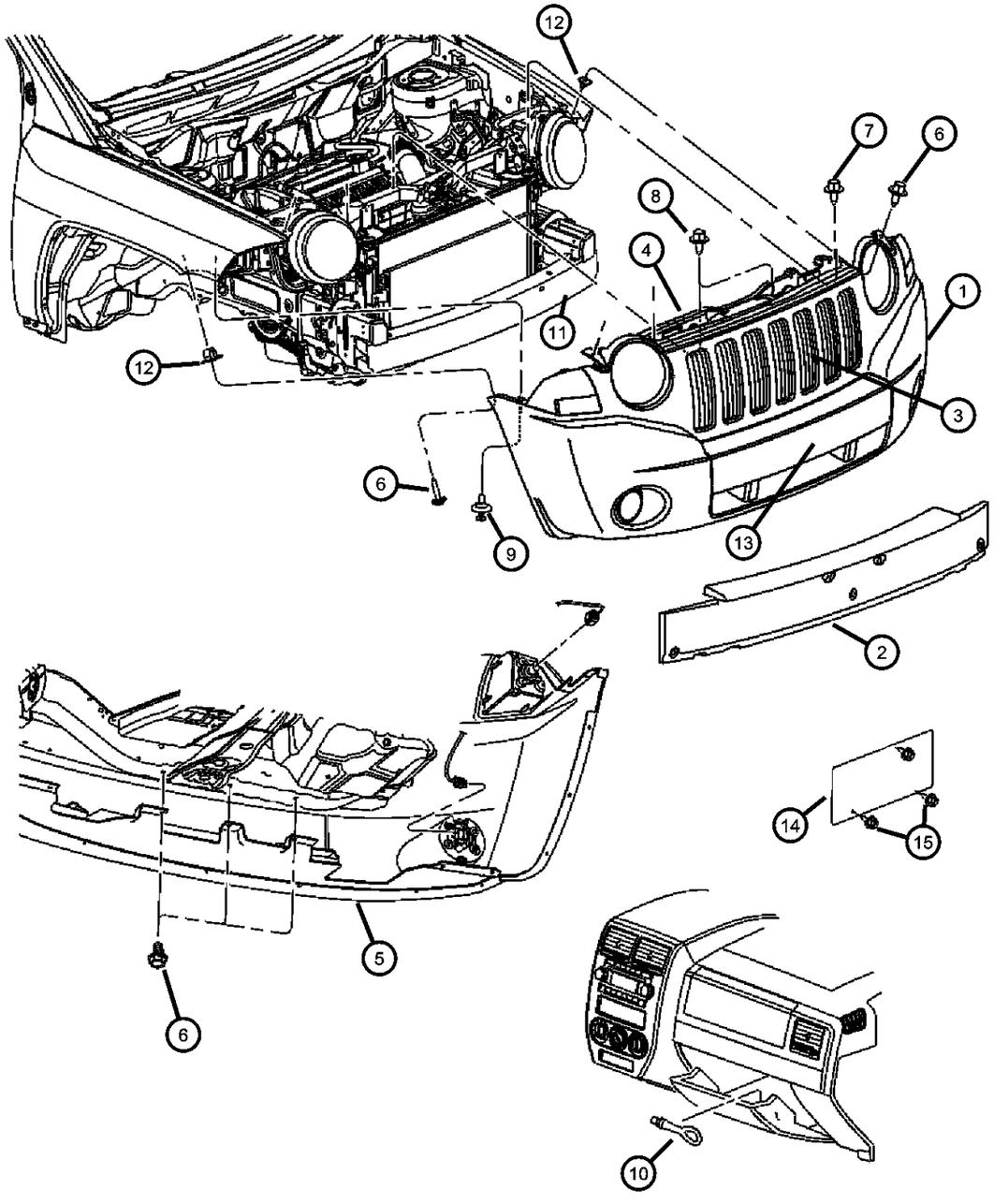

ITEM	PART NUMBER	QTY	LINE	SERIES	BODY	ENGINE	TRANS	TRIM	DESCRIPTION
Sales Code: [MCX]= Body Color Fascia With Bright Insert									
1	68002271AA	1	J, T, U		49				FASCIA, Front, Primed
2	05303762AA	1							FOAM, Front Bumper Fascia
3	0YS24XXXAA	1	J, T, U		49				GRILLE, Radiator
4	05116333AA	1							PANEL, Upper fascia
5	05116334AA	1							PANEL, Lower Fascia
6									SCREW AND WASHER, Hex Head, M6x1x25
	06105098AA	2							Grille to Fender
		3							Lower Fascia to Crossmember
		2							Fascia to Fender
7	06102142AA	4							SCREW, Hex Head, M6x1x15, To Grille
8	06104610AA	7	J, T, U		74				SCREW
9	04806334AA	4							FASTENER, Fascia
10	05067531AA	1							HOOK, Tow
11									REINFORCEMENT, Front Bumper
	05116056AB	1							Without Toe Eye Bracket [XEV]
	05303761AB	1							With Toe Eye Bracket [XEV]
12	06104885AA	2							RIVET, Grill to Fender
13	1CD92WS2AA	1	T, U, J		49				TRIM PLATE, Fascia Front, With Bright Insert [MCX]
14	05303390AB	1	J, T, U		49, 74				LICENSE PLATE KIT
15	06034866	5	J		49				SCREW

COMPASS/PATRIOT (MK)

SERIES	LINE	BODY	ENGINE	TRANSMISSION
H = HIGHLINE L = LOWLINE P = PREMIUM	J = JEEP - 4WD T = JEEP - 2WD	49 = HATCHBACK TYPE #2 74 = SPORT UTILITY 4-DR TYPE #4	ED3 = 2.4L 4 Cyl DOHC 16V Dual VVT Engine	DD7 = 5-Speed Manual T355 Transmission DEF = 6-Speed Manual Aisin BG6 Trans DAV = Continuously Variable Transmission DAW = Cont.Var. w/Off-Rd Crawl Ratio Trans

74 - Fascia, Front
Figure 13-220

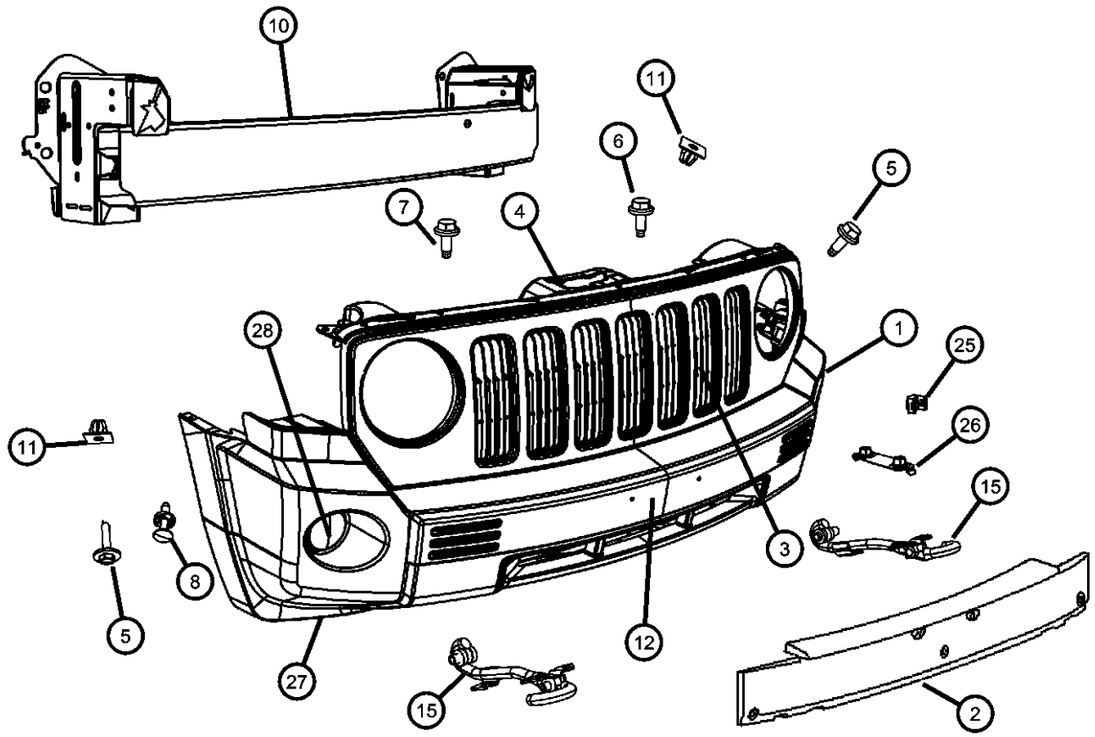

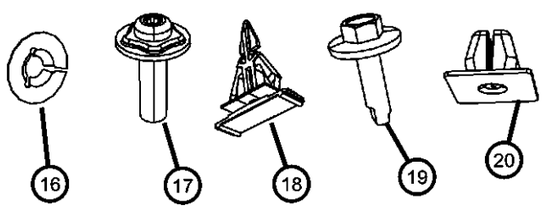

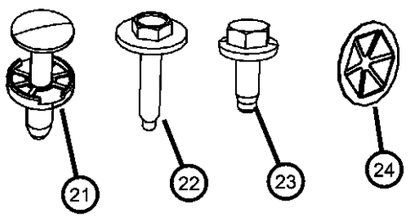

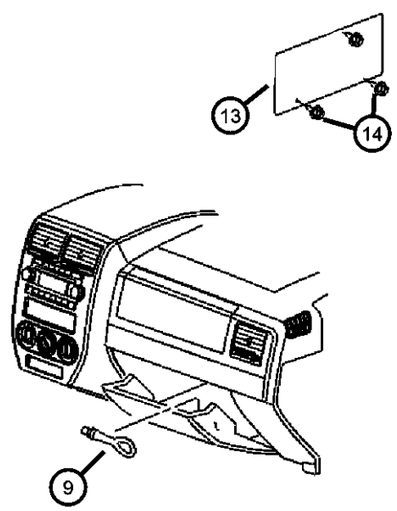

ITEM	PART NUMBER	QTY	LINE	SERIES	BODY	ENGINE	TRANS	TRIM	DESCRIPTION
Sales Codes: [MCX]= Body Color Fascia With Bright Insert [ML3]= Body Color Fascia [MLA]= Body Color Fascia [XEA]= Tow Hooks									
1									FASCIA, Front
	68021299AA	1	T, J		74				Body Color Fascia [ML3] Without Tow Hooks [XEA]
	68021303AA	1	J, T		74				Body Color Fascia [ML3] and Tow Hooks [XEA]
	68021305AA	1	J, T		74				With Bright Insert [MCX] and Tow Hooks [XEA]
	68021311AA	1	J, T		74				With Bright Insert [MCX] Without Tow Hooks [XEA]
	68021312AA	1	J, T, U		74				Body Color Fascia [MLA], Export
2									FOAM, Front Bumper Fascia
	05116368AA	1	J, T, U		74				Export
	05116362AA	1	J, T		74				
3	05116363AA	1	J, T, U		74				GRILLE, Radiator
4	05116364AA	1	J, T		74				PANEL, Upper fascia
5									SCREW AND WASHER, Hex Head, M6x1x25
	06105098AA	3							Lower Fascia to Crossmember
		2							Fascia to Fender
		2							Grille to Fender
6	06102142AA	4							SCREW, Hex Head, M6x1x15, To Grille
7	06104610AA	7	J, T, U		74				SCREW, Close Out Panel to Fascia
8	04806334AA	4							FASTENER, Fascia, Fascia to Fender
9	05067531AA	1							HOOK, Tow
10									REINFORCEMENT, Front Bumper
	05116373AA	1	J, T, U		74				Without Toe Eye Bracket [XEV]
	05303761AB	1							With Toe Eye Bracket [XEV]
11	06104885AA	2							RIVET, Grill to Fender
12	1CQ97WS2AA	1	J, T		74				NERF, Fascia
13	05303390AB	1	J, T, U		49, 74				LICENSE PLATE KIT
14	06034866	2	J, T, U		49, 74				SCREW

COMPASS/PATRIOT (MK)

SERIES	LINE	BODY	ENGINE	TRANSMISSION
H = HIGHLINE L = LOWLINE P = PREMIUM	J = JEEP - 4WD T = JEEP - 2WD	49 = HATCHBACK TYPE #2 74 = SPORT UTILITY 4-DR TYPE #4	ED3 = 2.4L 4 Cyl DOHC 16V Dual VVT Engine	DD7 = 5-Speed Manual T355 Transmission DEF = 6-Speed Manual Aisin BG6 Trans DAV = Continuously Variable Transmission DAW = Cont.Var. w/Off-Rd Crawl Ratio Trans

74 - Fascia, Front
Figure 13-220

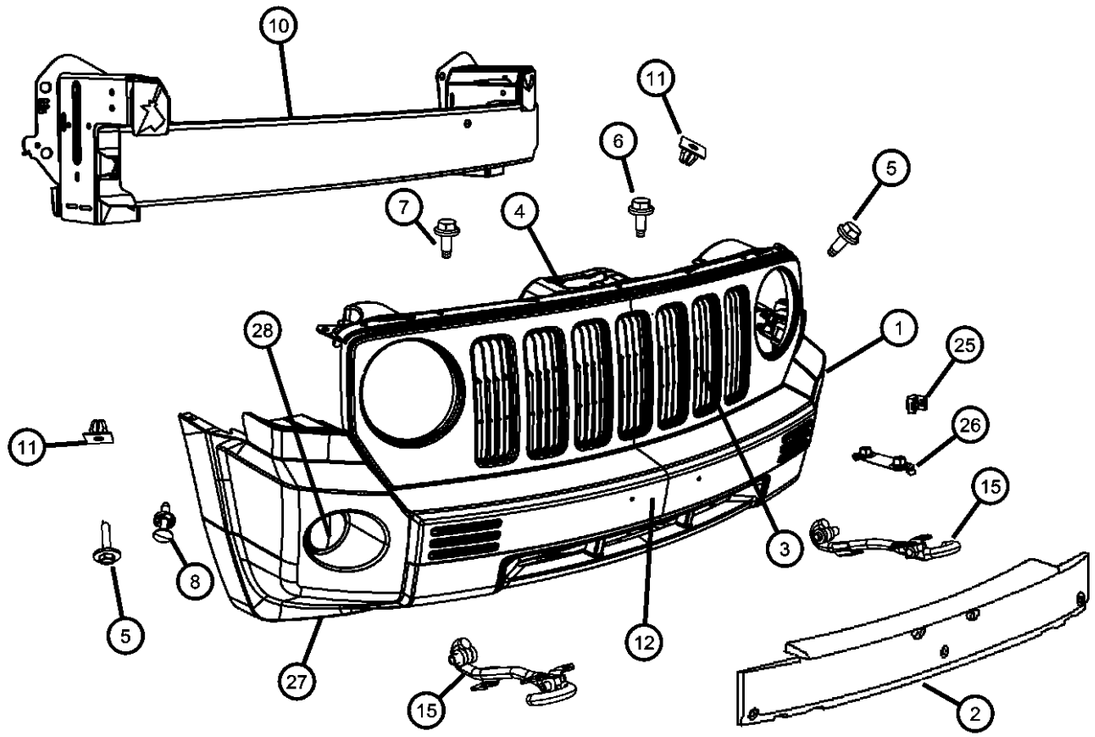

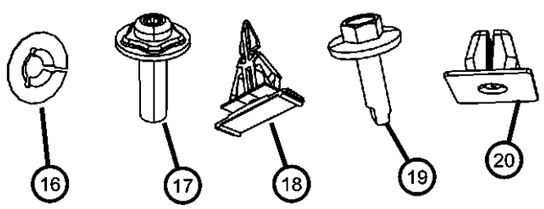

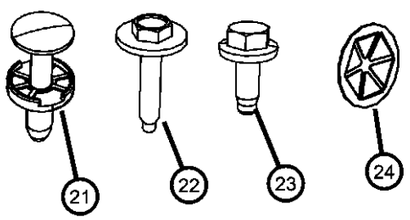

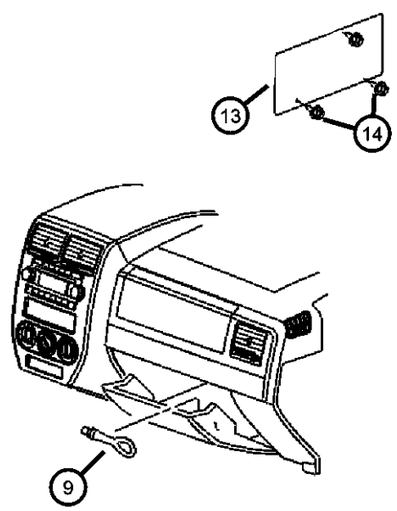

ITEM	PART NUMBER	QTY	LINE	SERIES	BODY	ENGINE	TRANS	TRIM	DESCRIPTION
15									HOOK, Tow
	05115268AB	1	J, T, U		74				Right
	05115269AB	1	J, T, U		74				Left
16									NUT, Spring Push On, .236
	06036169AA	1	J, T		74				Nerf to Fascia
		12	J, T, U		74				Grille to Fascia
17									SCREW, Tapping
	06506579AA	3	J, T		74				Turn Lamp to Fascia
		4	J, T		74				Fog Lamp to Fascia
		4	J, T, U		74				Close Out to Fascia
18	06508947AA	2	J, T		74				PIN, Push, Close Out to Fascia
19	06508315AA	2	J, T, U		74				SCREW, Fascia to Fender
20									NUT, Snap In, .164-18
	06035401	2							Fascia to Fender
		2							Fascia to Bodyside
21	05160260AA	5	J, T, U		74				PIN, Push, Upper Fascia to Crossmember
22	06507238AA	2	J, T, U		74				SCREW, Hex Flange Head Tapping, M4.2x1.7x25, Fascia to Fender
23	06104386AA	8							SCREW, M8x1.25x25, Bumper Reinforcement to Rail
24	06505049AA	3	J, T		74				NUT, M5, Foam to Fascia
25	05116357AA	2	J, T, U		74				BRACKET, Tow Hook
26	05116361AA	2	J, T, U		74				BRACKET, Tow Hook
27	05116410AA	1	J, T, U		74				PANEL, CLOSEOUTExport
28	04806184AA	2	J, T, U		74				BEZEL, Fog Lamp

COMPASS/PATRIOT (MK)

SERIES	LINE	BODY	ENGINE	TRANSMISSION
H = HIGHLINE L = LOWLINE P = PREMIUM	J = JEEP - 4WD T = JEEP - 2WD	49 = HATCHBACK TYPE #2 74 = SPORT UTILITY 4-DR TYPE #4	ED3 = 2.4L 4 Cyl DOHC 16V Dual VVT Engine	DD7 = 5-Speed Manual T355 Transmission DEF = 6-Speed Manual Aisin BG6 Trans DAV = Continuously Variable Transmission DAW = Cont.Var. w/Off-Rd Crawl Ratio Trans

49 - Fascia, Rear
Figure 13-310

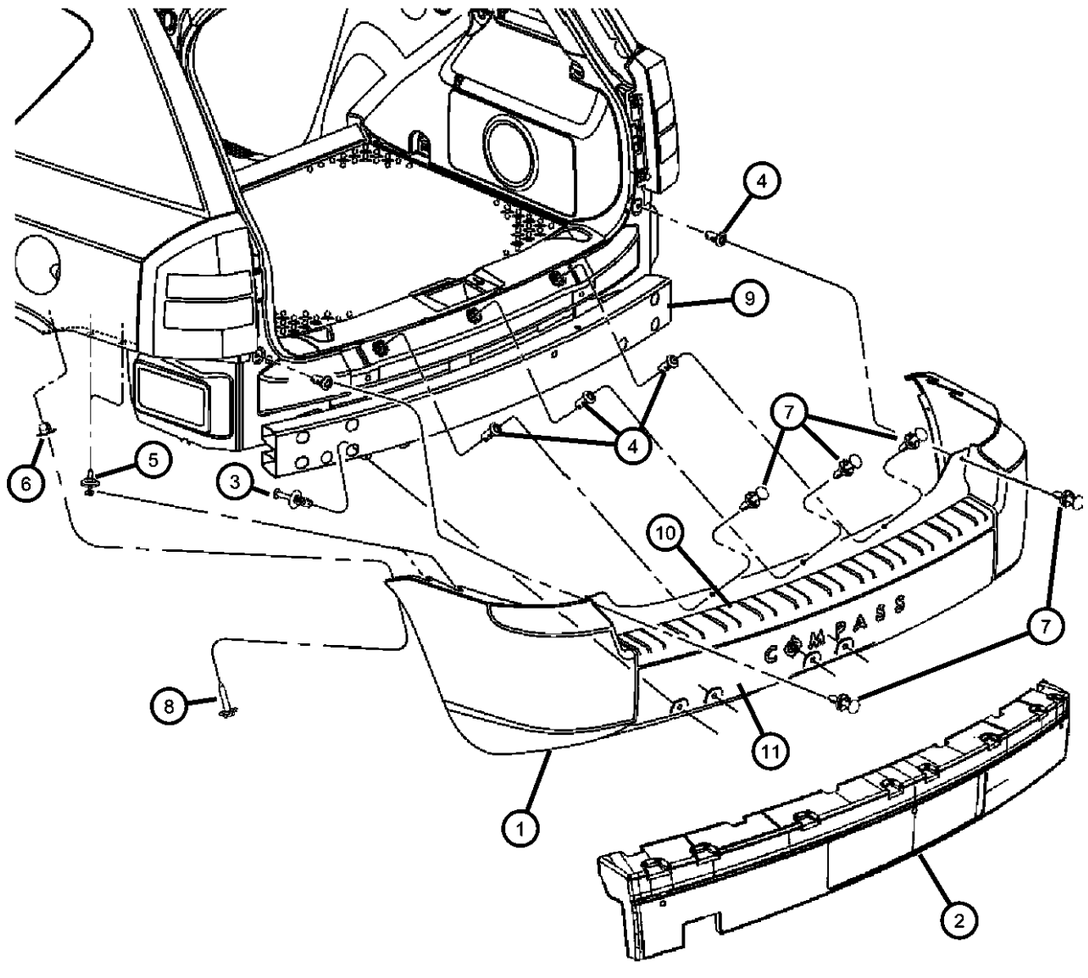

ITEM	PART NUMBER	QTY	LINE	SERIES	BODY	ENGINE	TRANS	TRIM	DESCRIPTION
1									FASCIA, Rear, Primed, Paint as Requiered
	0ZY61TZZAA	1	J, T, U		49				
	0ZY71TZZAA	1							Export
2									FOAM, Rear Bumper Fascia
	05303822AA	1							
	68002101AA	1	J, T, U		49, 74				Without Toe Eye Brackets [XEV]
3	05166238AA	4	J, T, U		74				RIVET, Plastic
4	04806271AA	5							GROMMET, Fascia to Liftgate Opening
5	04806334AA	4							FASTENER, Fascia, To Body Side Aperture
6	06035401	2							NUT, Snap In, .164-18, Fascia to Body Side Aperture
7	05160260AA	5							PIN, Push
8	06507238AA	2							SCREW, Hex Flange Head Tapping, M4.2x1.7x25
9									REINFORCEMENT, Rear Bumper
	05116052AA	1							With Toe Eye Brackets [XEV]
	05303769AC	1	J, T, U		49				Without Toe Eye Brackets [XEV]
10	05116331AA	1			49				SCUFF PAD, Rear Fascia
11									PLATE, Fascia
	1CD94TZZAA	1							
	1CD97TZZAA	1							Export

COMPASS/PATRIOT (MK)

SERIES	LINE	BODY	ENGINE	TRANSMISSION
H = HIGHLINE L = LOWLINE P = PREMIUM	J = JEEP - 4WD T = JEEP - 2WD	49 = HATCHBACK TYPE #2 74 = SPORT UTILITY 4-DR TYPE #4	ED3 = 2.4L 4 Cyl DOHC 16V Dual VVT Engine	DD7 = 5-Speed Manual T355 Transmission DEF = 6-Speed Manual Aisin BG6 Trans DAV = Continuously Variable Transmission DAW = Cont.Var. w/Off-Rd Crawl Ratio Trans

74 - Fascia, Rear
Figure 13-320

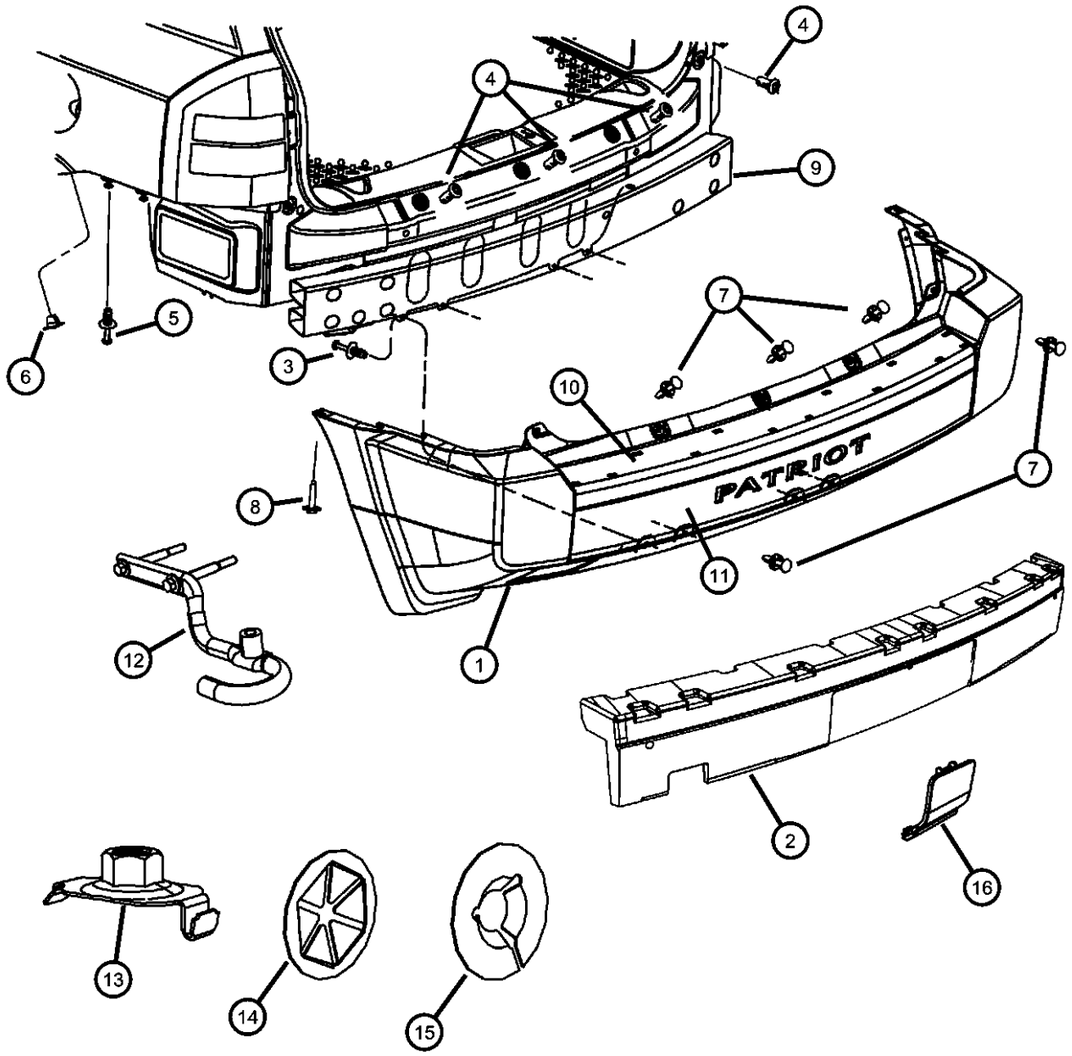

ITEM	PART NUMBER	QTY	LINE	SERIES	BODY	ENGINE	TRANS	TRIM	DESCRIPTION
Sales Codes: [MCU]= Body Color Fascia [MCX]= Body Color Fascia With Bright Insert [ML3]= Body Color Fascia [MLA]= Body Color Fascia [XEA]= Tow Hooks									
1									FASCIA, Rear, Primed, Paint as Requiered
	68021290AA	1	J, T, U		74				Body Color Fascia [ML3], Without Tow Hook [XEA]
	68021293AA	1	J, T		74				Body Color Fascia [MCX], With Tow Hook [XEA]
	68021294AA	1	J, T		74				Body Color Fascia [ML3], With Tow Hook [XEA]
	68021296AA	1	J, T		74				Body Color Fascia [MCX], Without Tow Hook [XEA]
	68021316AA	1	J, T, U		74				Body Color Fascia With Bright Insert [MLA], Export
	68021317AA	1	J, T, U		74				Body Color Fascia [MCU], Export
2									FOAM, Rear Bumper Fascia
	05116367AA	1	J, T, U		74				
	68002101AA	1	J, T, U		49, 74				Without Toe Eye Brackets [XEV]
3	05166238AA	4	J, T, U		74				RIVET, Plastic
4	04806271AA	5							GROMMET, Fascia to Liftgate Opening
5	04806334AA	4							FASTENER, Fascia, To Body Side Aperture
6	06035401	2							NUT, Snap In, .164-18, Fascia to Body Side Aperture
7	05160260AA	5							PIN, Push
8	06507238AA	2							SCREW, Hex Flange Head Tapping, M4.2x1.7x25
9									REINFORCEMENT, Rear Bumper
	05116052AA	1							With Toe Eye Brackets [XEV]
	05303769AA	1							Without Toe Eye Brackets [XEV]
10	05116331AA	1	J, T		74				SCUFF PAD, Rear Fascia
11									NERF, Fascia
	05116497AA	1	J, T, U		74				
	1CR08WS2AA	1	J, T		74				
12	05115270AB	1	J, T, U		74				HOOK, Tow

COMPASS/PATRIOT (MK)

SERIES	LINE	BODY	ENGINE	TRANSMISSION
H = HIGHLINE L = LOWLINE P = PREMIUM	J = JEEP - 4WD T = JEEP - 2WD	49 = HATCHBACK TYPE #2 74 = SPORT UTILITY 4-DR TYPE #4	ED3 = 2.4L 4 Cyl DOHC 16V Dual VVT Engine	DD7 = 5-Speed Manual T355 Transmission DEF = 6-Speed Manual Aisin BG6 Trans DAV = Continuously Variable Transmission DAW = Cont.Var. w/Off-Rd Crawl Ratio Trans

74 - Fascia, Rear
Figure 13-320

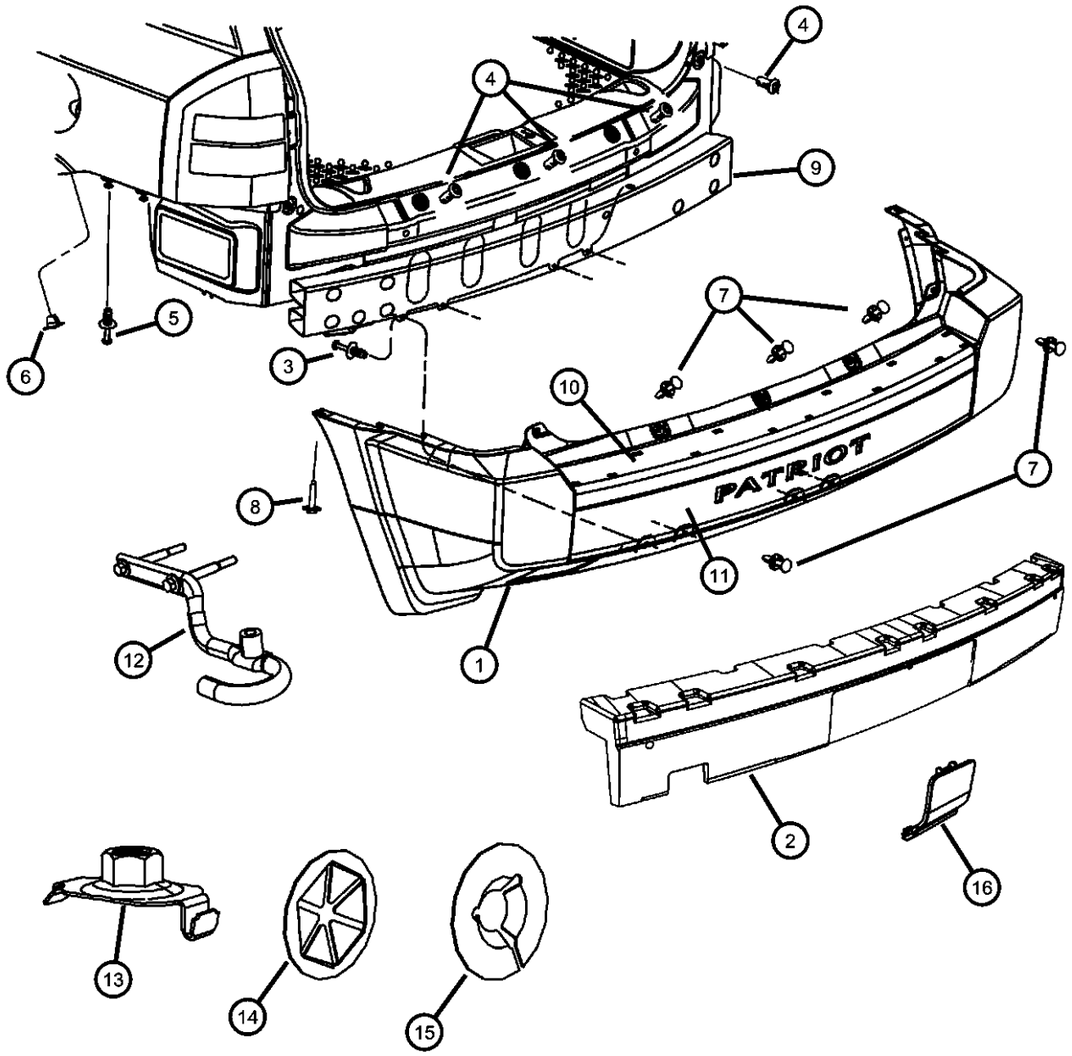

ITEM	PART NUMBER	QTY	LINE	SERIES	BODY	ENGINE	TRANS	TRIM	DESCRIPTION
13	05116360AB	1	J, T, U		74				PLATE, Tow Hook
14	06505049AA	3	J, T		74				NUT, M5
15	06036169AA	1	J, T		74				NUT, Spring Push On, .236
16	1CR13TZZAA	1	J, T, U		74				PLUG, Tow Hook

COMPASS/PATRIOT (MK)

SERIES	LINE	BODY	ENGINE	TRANSMISSION
H = HIGHLINE L = LOWLINE P = PREMIUM	J = JEEP - 4WD T = JEEP - 2WD	49 = HATCHBACK TYPE #2 74 = SPORT UTILITY 4-DR TYPE #4	ED3 = 2.4L 4 Cyl DOHC 16V Dual VVT Engine	DD7 = 5-Speed Manual T355 Transmission DEF = 6-Speed Manual Aisin BG6 Trans DAV = Continuously Variable Transmission DAW = Cont.Var. w/Off-Rd Crawl Ratio Trans

Group - 14

Fuel

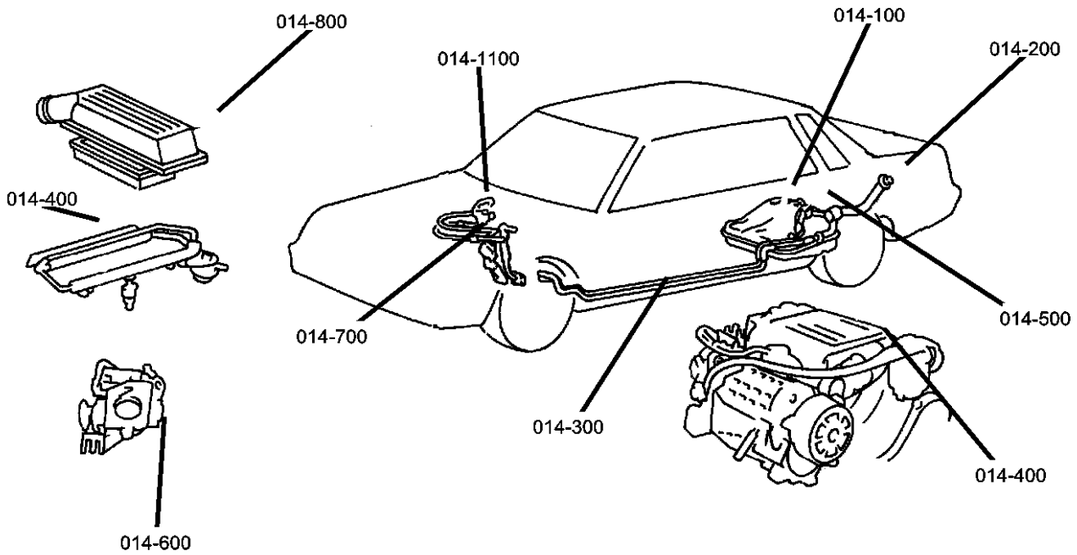

014-100 Tank, Fuel 	**014-1100** Accelerator Pedal 	**014-200** Fuel Tank Filler Tube 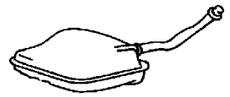	**014-300** Fuel Lines 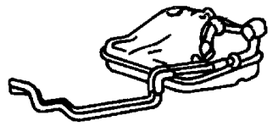
014-400 Fuel Rail 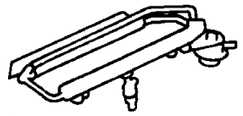	**014-500** Fuel Pump and Sending Unit 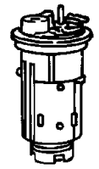	**014-600** Throttle Body 	**014-800** Air Cleaner 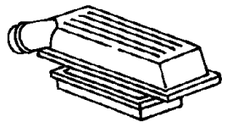
014-900 Air Intake System 			

Group - 14 Fuel

Illustration Title — Group-Fig. No.

Tank, Fuel
Fuel Tank, All Engines ..... Fig. 14 - 110

Fuel Tank Filler Tube
Fuel Filler Tube, All Engines ..... Fig. 14 - 210

Fuel Lines
Fuel Lines, 2.4L [ED3] Gas Engines ..... Fig. 14 - 310
Fuel line Diesel ..... Fig. 14 - 312
Fuel Lines 2.0L [ECD] Diesel ..... Fig. 14 - 315
Fuel Filter Diesel 2.0L [ECD] ..... Fig. 14 - 320

Fuel Rail
Fuel Rail, All Engines ..... Fig. 14 - 410

Fuel Pump and Sending Unit
Fuel Pump and Sending Unit ..... Fig. 14 - 510
Fuel Injection Pump 2.0L [ECD] Diesel ..... Fig. 14 - 520

Throttle Body
Throttle Body ..... Fig. 14 - 610

Air Cleaner
Air Cleaner Gas ..... Fig. 14 - 810
Air Cleaner Diesel ..... Fig. 14 - 820

Air Intake System
Air Intake ..... Fig. 14 - 910

Accelerator Pedal
Accelerator Pedal ..... Fig. 14 - 1110

Fuel Tank, All Engines
Figure 14-110

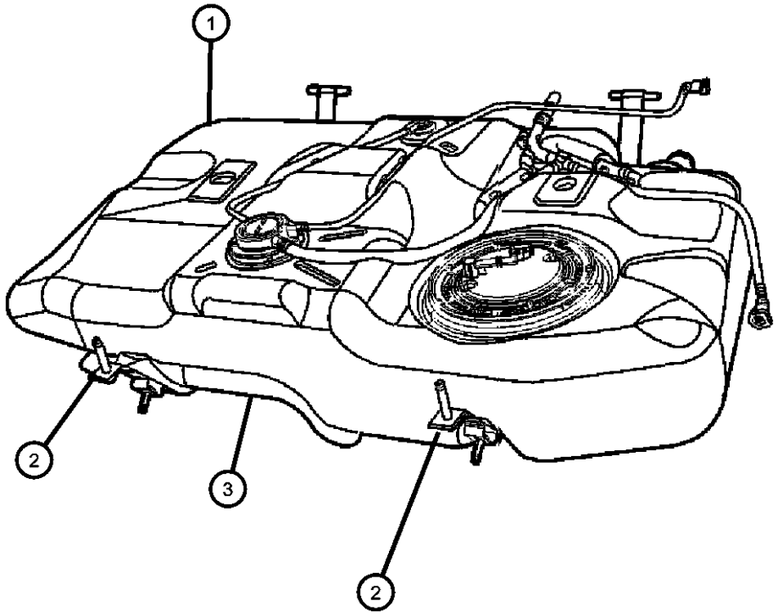

ITEM	PART NUMBER	QTY	LINE	SERIES	BODY	ENGINE	TRANS	TRIM	DESCRIPTION
1									TANK, Fuel
	05105135AD	1	T			ED3			13.6 GALLON FUEL TANK FRONT WHEEL DRIVE
	05105136AD	1	J, U			ED3			13.5 GALLON FUEL TANK 4W-DRIVE
	05105574AD	1	J, U		49, 74	ECD			13.5 GALLON FUEL TANK 4W-DRIVE
2									STRAP, Fuel Tank
	05105548AB	1	T						
	05105549AA	2							
3									SHIELD, Fuel Tank Heat
	05105334AD	1				ED3			
	05105336AC	1	T			ED3			

COMPASS/PATRIOT (MK)

SERIES	LINE	BODY	ENGINE	TRANSMISSION
H = HIGHLINE L = LOWLINE P = PREMIUM	J = JEEP - 4WD T = JEEP - 2WD	49 = HATCHBACK TYPE #2 74 = SPORT UTILITY 4-DR TYPE #4	ED3 = 2.4L 4 Cyl DOHC 16V Dual VVT Engine	DD7 = 5-Speed Manual T355 Transmission DEF = 6-Speed Manual Aisin BG6 Trans DAV = Continuously Variable Transmission DAW = Cont.Var. w/Off-Rd Crawl Ratio Trans

Fuel Filler Tube, All Engines
Figure 14-210

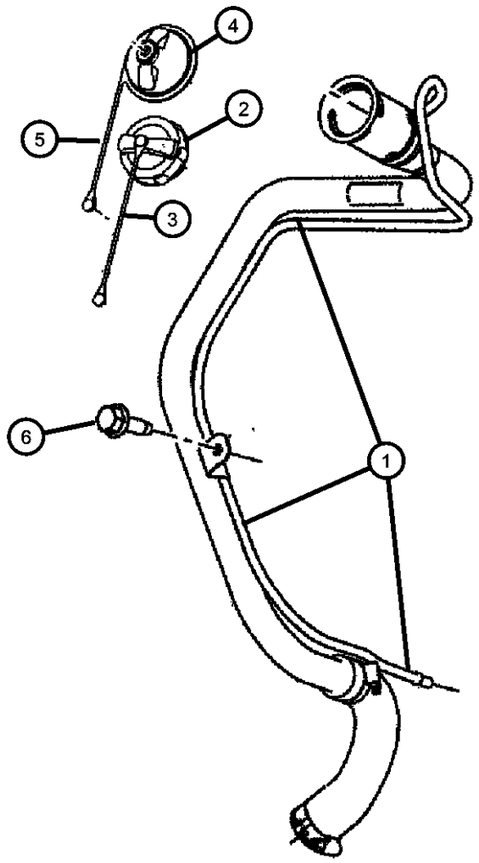

ITEM	PART NUMBER	QTY	LINE	SERIES	BODY	ENGINE	TRANS	TRIM	DESCRIPTION
1									TUBE, Fuel Filler
	04726227AB	1				ECD			
	05105255AD	1	J, T, U		49	ED3			
2	05165383AA	1							CAP, Fuel Filler
3	04682676	1							TETHER, Fuel Filler Cap
4	05015636AB	1							CAP KIT, Fuel Tank Locking, This is a Package Which Contains the gas cap and lock cylinder
5	05278461AA	1							TETHER, Fuel Filler Cap
6	06105150AA	1							SCREW, Hex Flange Head, M6x1.00x20.00
-7	05116525AA	1							SPACER, Fuel Filler Housing

COMPASS/PATRIOT (MK)

SERIES	LINE	BODY	ENGINE	TRANSMISSION
H = HIGHLINE L = LOWLINE P = PREMIUM	J = JEEP - 4WD T = JEEP - 2WD	49 = HATCHBACK TYPE #2 74 = SPORT UTILITY 4-DR TYPE #4	ED3 = 2.4L 4 Cyl DOHC 16V Dual VVT Engine	DD7 = 5-Speed Manual T355 Transmission DEF = 6-Speed Manual Aisin BG6 Trans DAV = Continuously Variable Transmission DAW = Cont.Var. w/Off-Rd Crawl Ratio Trans

AR = use ase required - = Non illustrrated part

Fuel Lines, 2.4L [ED3] Gas Engines
Figure 14-310

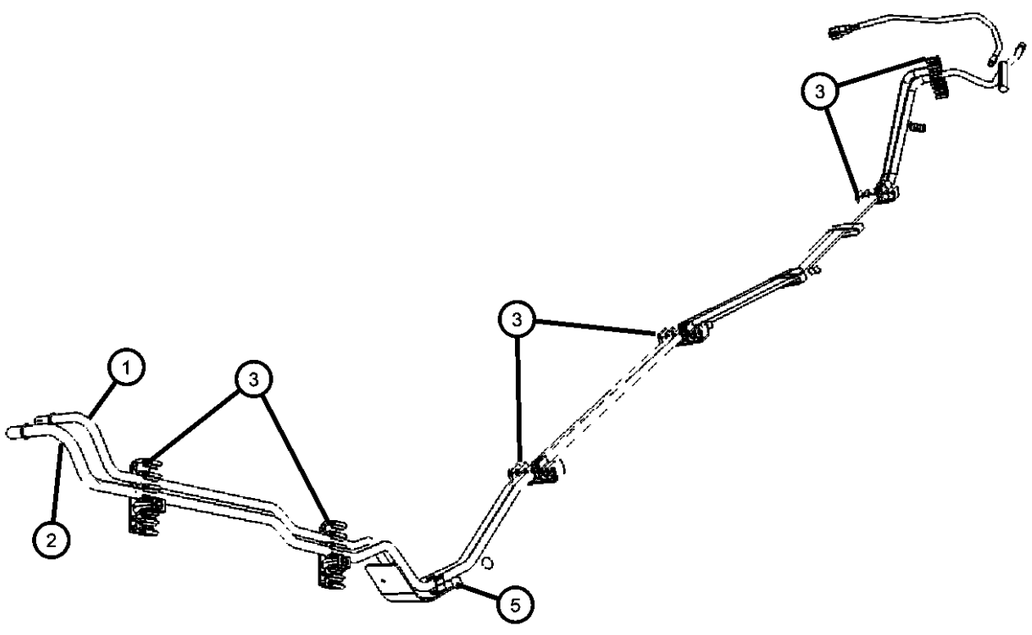

ITEM	PART NUMBER	QTY	LINE	SERIES	BODY	ENGINE	TRANS	TRIM	DESCRIPTION
1	05189338AA	1				ED3			TUBE, Fuel Supply
2	05189339AA	1				ED3			TUBE, Fuel Vapor
3	05189342AA	6				ED3			CLIP, Fuel Line
-4	05189343AA	2	J, T, U		49, 74	ED3			CLIP, Fuel Line
5	05189344AA	3				ED3			BUMPER, Rubber

COMPASS/PATRIOT (MK)

SERIES	LINE	BODY	ENGINE	TRANSMISSION
H = HIGHLINE L = LOWLINE P = PREMIUM	J = JEEP - 4WD T = JEEP - 2WD	49 = HATCHBACK TYPE #2 74 = SPORT UTILITY 4-DR TYPE #4	ED3 = 2.4L 4 Cyl DOHC 16V Dual VVT Engine	DD7 = 5-Speed Manual T355 Transmission DEF = 6-Speed Manual Aisin BG6 Trans DAV = Continuously Variable Transmission DAW = Cont.Var. w/Off-Rd Crawl Ratio Trans

Fuel line Diesel
Figure 14-312

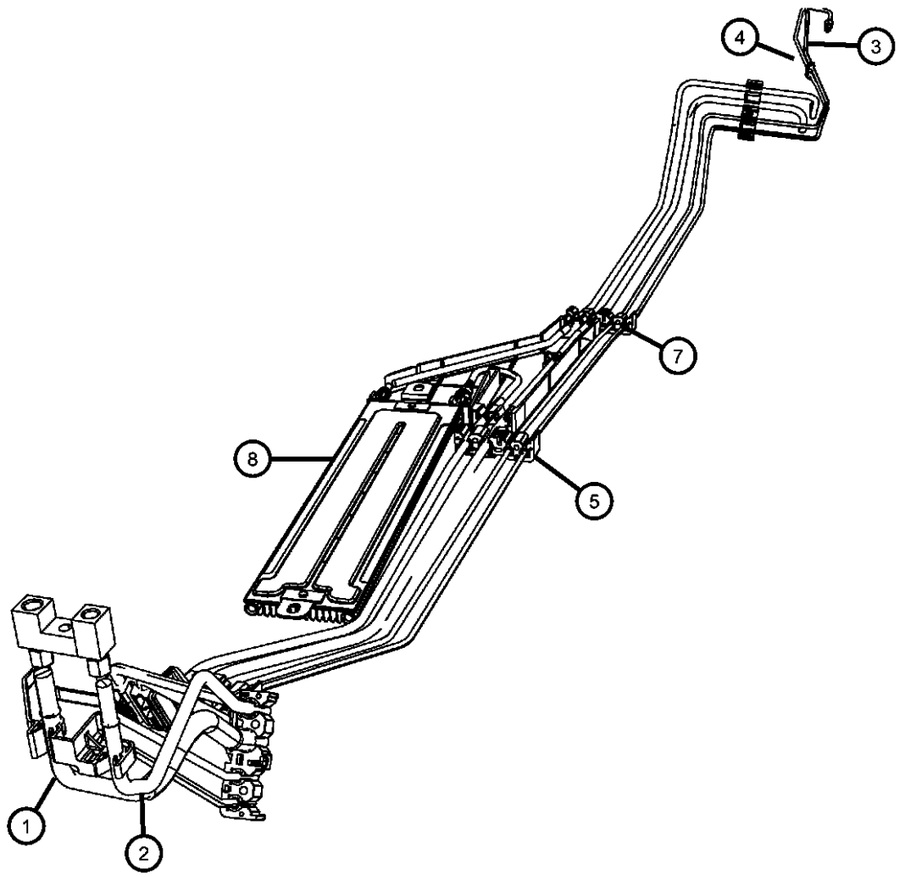

ITEM	PART NUMBER	QTY	LINE	SERIES	BODY	ENGINE	TRANS	TRIM	DESCRIPTION
NOTE: Sales Codes: [ED3] = 2.4L DOHC 16V Dual V.V.T [ECN] = 2.0L 4 Cyl. DOHC 16V Dual V.V.T [EER] = 2.7L V6 DOHC 24V MPI [EGF] = 3.5L High Output V6 24V MPI [ECD] = 2.0L 4 Cyl. DOHC Diesel 16V									
1	05189346AA	1	J, T, U		49, 74	ECD			TUBE, Fuel Supply
2									TUBE, Fuel Return
	05189345AA	1	J, T, U		49, 74	ECD			
	05189347AB	1	J, T, U		49, 74	ECD			Fuel Bundle
3	05189347AB	1							TUBE, Fuel Supply, (NOT SERVICED),
4	05189347AA	1	J, T, U		49, 74	ECD			TUBE, Fuel Return
5	05137750AB	1	J, T, U		49, 74	ECD			CLIP, Fuel Bundle
-6									CLIP, Fuel Line
	05189342AA	6	J, T, U		49, 74	ECD			5 Tube
		6	J, T, U		49, 74	ECD			
7	05189342AA	6	J, T, U		49, 74	ECD			CLIP, Fuel Line, 2 Tube
8	05105636AA	1	J, T, U		49, 74	ECD			COOLER, Fuel, Diesel

COMPASS/PATRIOT (MK)

SERIES	LINE	BODY	ENGINE	TRANSMISSION
H = HIGHLINE L = LOWLINE P = PREMIUM	J = JEEP - 4WD T = JEEP - 2WD	49 = HATCHBACK TYPE #2 74 = SPORT UTILITY 4-DR TYPE #4	ED3 = 2.4L 4 Cyl DOHC 16V Dual VVT Engine	DD7 = 5-Speed Manual T355 Transmission DEF = 6-Speed Manual Aisin BG6 Trans DAV = Continuously Variable Transmission DAW = Cont.Var. w/Off-Rd Crawl Ratio Trans

Fuel Lines 2.0L [ECD] Diesel
Figure 14-315

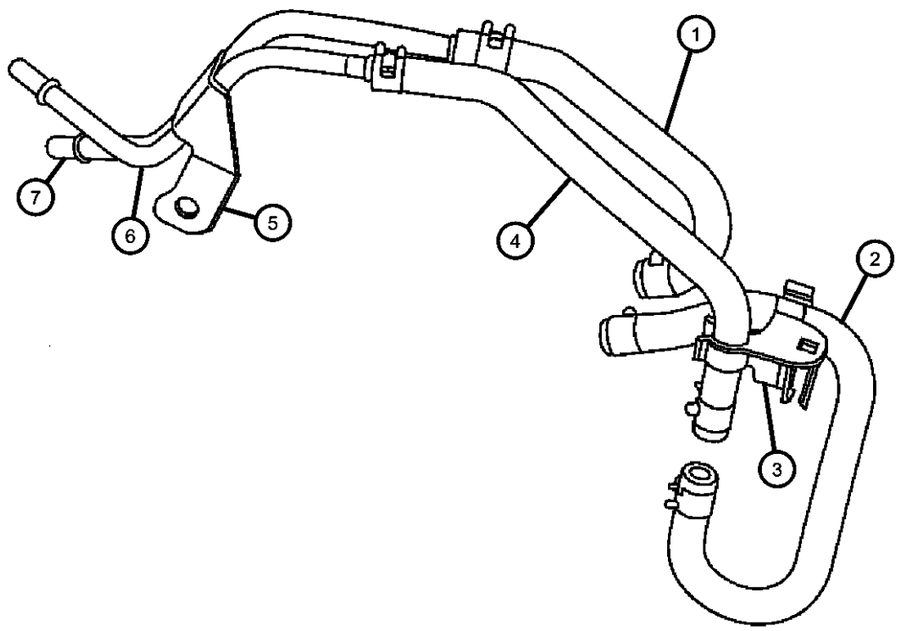

ITEM	PART NUMBER	QTY	LINE	SERIES	BODY	ENGINE	TRANS	TRIM	DESCRIPTION
1	05085369AA	1	J, T, U		49, 74	ECD			HOSE, Fuel Supply
2	05105443AA	1	J, T, U		49, 74	ECD			HOSE, Fuel Return
3	05105714AA	1	J, T, U		49, 74	ECD			CLIP, Fuel Bundle
4	05085370AA	1	J, T, U		49, 74	ECD			HOSE, Fuel Return
5	05085370AA	1							BRACKET, Service with fuel bundle 05105444AA, (NOT SERVICED)
6	05189346AA	1	J, T, U		49, 74	ECD			TUBE, Fuel Supply, Service with fuel bundle 05105444AA
7	05189346AA	1							TUBE, Fuel Supply, Service with fuel bundle 05105444AA, (NOT SERVICED)
-8									CLIP, Fuel Line
	05189342AA	6	J, T, U		49, 74	ECD			5-TUBE
	05189343AA	4	U, J, T		49, 74	ECD			2-TUBE
-9	05179913AA	1	J, T, U		49, 74	ECD			TUBE, Fuel Supply and Return

COMPASS/PATRIOT (MK)

SERIES	LINE	BODY	ENGINE	TRANSMISSION
H = HIGHLINE L = LOWLINE P = PREMIUM	J = JEEP - 4WD T = JEEP - 2WD	49 = HATCHBACK TYPE #2 74 = SPORT UTILITY 4-DR TYPE #4	ED3 = 2.4L 4 Cyl DOHC 16V Dual VVT Engine	DD7 = 5-Speed Manual T355 Transmission DEF = 6-Speed Manual Aisin BG6 Trans DAV = Continuously Variable Transmission DAW = Cont.Var. w/Off-Rd Crawl Ratio Trans

Fuel Filter Diesel 2.0L [ECD]
Figure 14-320

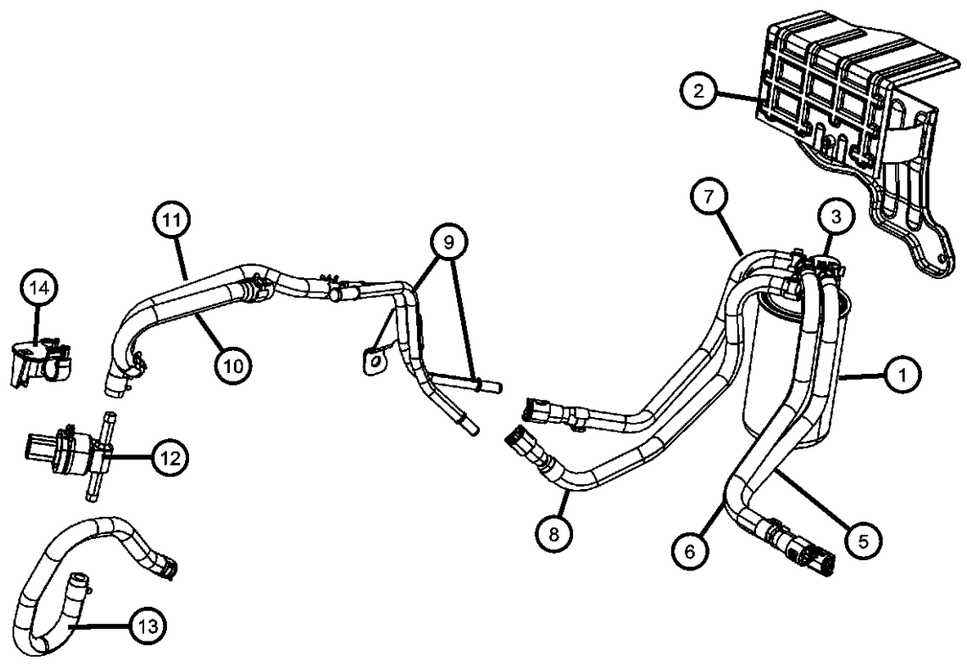

ITEM	PART NUMBER	QTY	LINE	SERIES	BODY	ENGINE	TRANS	TRIM	DESCRIPTION
1	05166780AA	1	J, T, U		49, 74	ECD			FILTER, Fuel
2	05085574AD	1	J, T, U		49, 74	ECD			BRACKET, Fuel Filter
3	05179522AA	1	J, T, U		49, 74	ECD			VALVE, Flow
-4	05179912AA	1	J, T, U		49, 74	ECD			CLIP, Flow Valve
5	68000472AA	1	J, T, U		49, 74	ECD			HOSE, Fuel Filter
6	68000473AA	1	J, T, U		49, 74	ECD			HOSE, Fuel Filter
7	68000474AA	1	J, T, U		49, 74	ECD			HOSE, Fuel Filter
8	68000475AA	1	J, T, U		49, 74	ECD			HOSE, Fuel Filter
9	05179913AA	1	J, T, U		49, 74	ECD			TUBE, Fuel Supply and Return
10	05085369AA	1	J, T, U		49, 74	ECD			HOSE, Fuel Supply
11	05085370AA	1	J, T, U		49, 74	ECD			HOSE, Fuel Return
12	05033378AA	1	J, T, U		49, 74	ECD			SENSOR, Fuel Temperature
13	05105443AA	1	U, J, T		49, 74	ECD			HOSE, Fuel Return
14	05105714AA	1	J, T, U		49, 74	ECD			CLIP, Fuel Bundle

COMPASS/PATRIOT (MK)

SERIES	LINE	BODY	ENGINE	TRANSMISSION
H = HIGHLINE L = LOWLINE P = PREMIUM	J = JEEP - 4WD T = JEEP - 2WD	49 = HATCHBACK TYPE #2 74 = SPORT UTILITY 4-DR TYPE #4	ED3 = 2.4L 4 Cyl DOHC 16V Dual VVT Engine	DD7 = 5-Speed Manual T355 Transmission DEF = 6-Speed Manual Aisin BG6 Trans DAV = Continuously Variable Transmission DAW = Cont.Var. w/Off-Rd Crawl Ratio Trans

AR = use ase required - = Non illustrrated part

Fuel Rail, All Engines
Figure 14-410

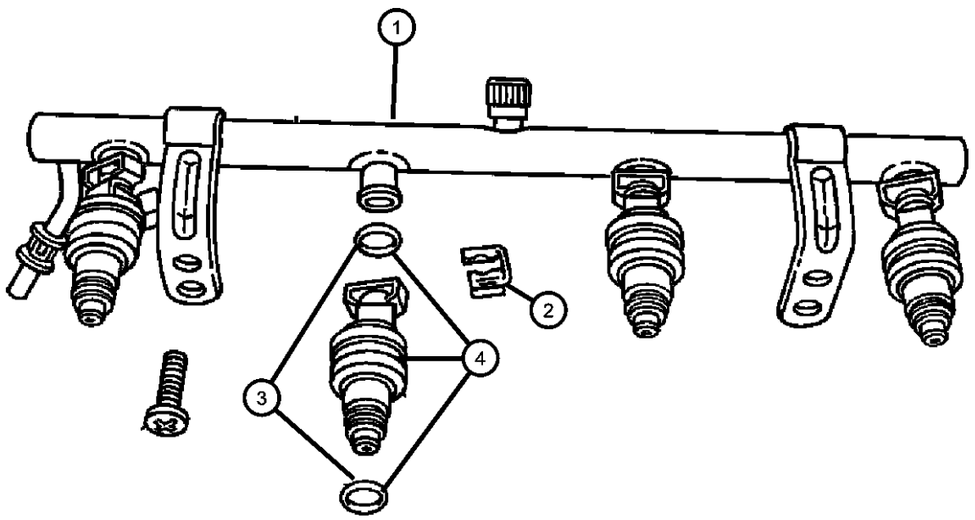

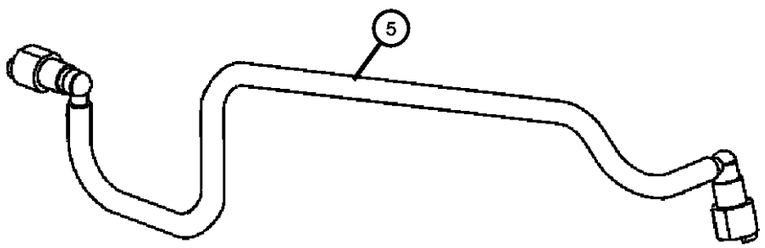

ITEM	PART NUMBER	QTY	LINE	SERIES	BODY	ENGINE	TRANS	TRIM	DESCRIPTION
1									RAIL, Fuel
	04891575AA	1				ED3			
	68001311AA	1	J, T, U		74, 49	ECD			
2	04418257AB	4				ED3			CLIP, Fuel Injector
3	04897125AA	4				ED3			O RING KIT, Fuel Injector
4									INJECTOR, Fuel
	04891577AB	4				ED3			
	68000912AA	4				ECD			
5	05105112AC	1				ED3			TUBE, Fuel Supply

COMPASS/PATRIOT (MK)

SERIES	LINE	BODY	ENGINE	TRANSMISSION
H = HIGHLINE L = LOWLINE P = PREMIUM	J = JEEP - 4WD T = JEEP - 2WD	49 = HATCHBACK TYPE #2 74 = SPORT UTILITY 4-DR TYPE #4	ED3 = 2.4L 4 Cyl DOHC 16V Dual VVT Engine	DD7 = 5-Speed Manual T355 Transmission DEF = 6-Speed Manual Aisin BG6 Trans DAV = Continuously Variable Transmission DAW = Cont.Var. w/Off-Rd Crawl Ratio Trans

AR = use ase required - = Non illustrrated part

Fuel Pump and Sending Unit
Figure 14-510

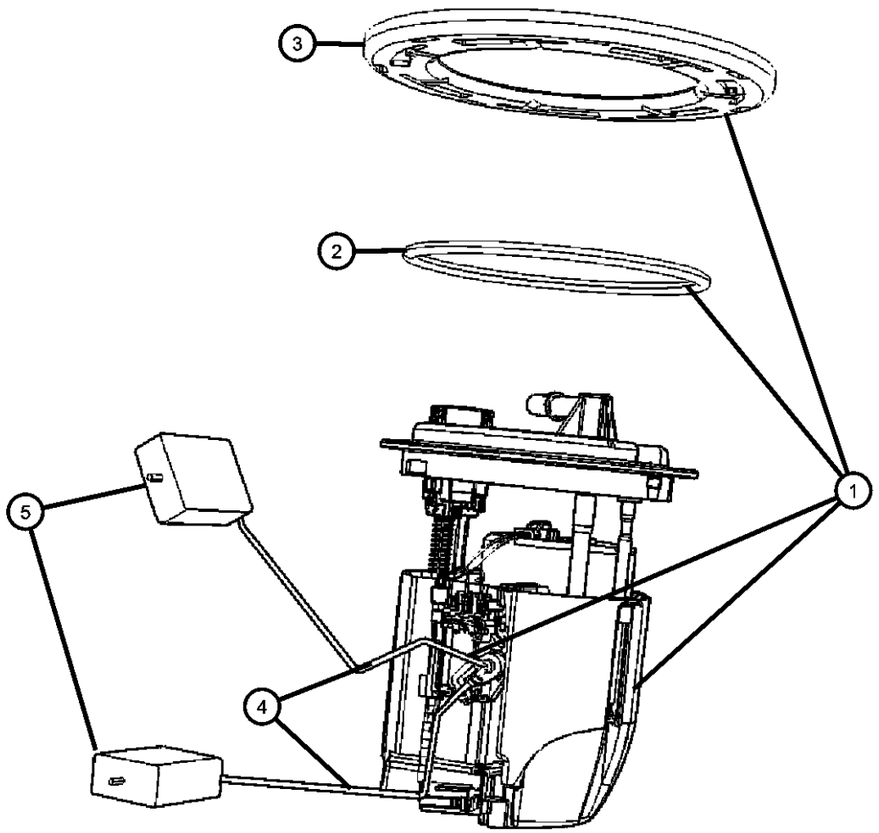

ITEM	PART NUMBER	QTY	LINE	SERIES	BODY	ENGINE	TRANS	TRIM	DESCRIPTION
1									MODULE PACKAGE, Fuel Tank
	05183202AA	1				ED3			13.5 GALLON
	05183201AA	1	T			ED3			13.6 GALLON
2									O RING, Fuel Pump and Level Unit
	55366298AA	1				ED3			
		1	J, U		49, 74	ECD			
3									RING, Lock, Fuel Module
	05105332AA	1				ED3			13.5 GALLON 4WD
		1				ECD			13.5 GALLON 4WD
	55366299AA	1				ED3			13.5 GALLON
		1	T		49, 74	ED3			13.6 GALLON FWD
		1	J, U		49, 74	ECD			13.5 GALLON 4WD
4									LEVEL UNIT PACKAGE, Fuel
	05183203AA	1				ED3			
	05183204AA	1				ED3			Secondary
5	68003359AA	1	J, U		49, 74	ECD			LEVEL UNIT, Fuel
-6	68003358AA	1	J, U		49, 74	ECD			MODULE, Fuel Pump/Level Unit

COMPASS/PATRIOT (MK)

SERIES	LINE	BODY	ENGINE	TRANSMISSION
H = HIGHLINE L = LOWLINE P = PREMIUM	J = JEEP - 4WD T = JEEP - 2WD	49 = HATCHBACK TYPE #2 74 = SPORT UTILITY 4-DR TYPE #4	ED3 = 2.4L 4 Cyl DOHC 16V Dual VVT Engine	DD7 = 5-Speed Manual T355 Transmission DEF = 6-Speed Manual Aisin BG6 Trans DAV = Continuously Variable Transmission DAW = Cont.Var. w/Off-Rd Crawl Ratio Trans

AR = use ase required - = Non illustrrated part

Fuel Injection Pump 2.0L [ECD] Diesel
Figure 14-520

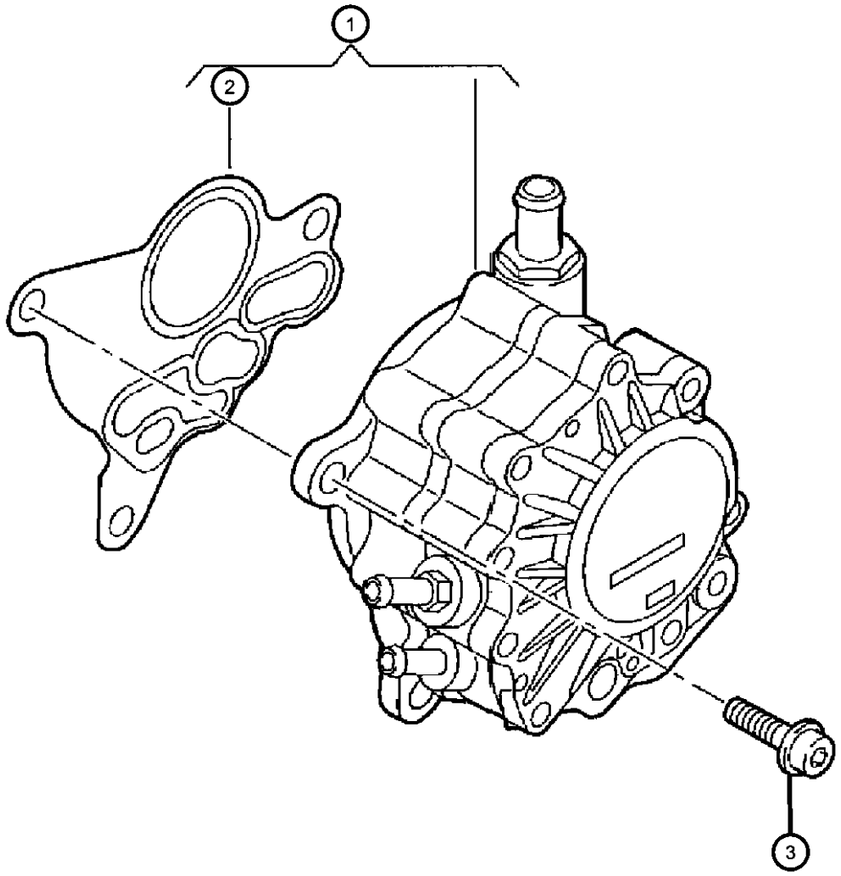

ITEM	PART NUMBER	QTY	LINE	SERIES	BODY	ENGINE	TRANS	TRIM	DESCRIPTION
1	68000629AA	1				ECD			PUMP, Fuel Injection
2	68000630AA	1				ECD			GASKET, Fuel Pump
3	68001526AA	1	J, T, U		49, 74	ECD			BOLT

COMPASS/PATRIOT (MK)

SERIES	LINE	BODY	ENGINE	TRANSMISSION
H = HIGHLINE L = LOWLINE P = PREMIUM	J = JEEP - 4WD T = JEEP - 2WD	49 = HATCHBACK TYPE #2 74 = SPORT UTILITY 4-DR TYPE #4	ED3 = 2.4L 4 Cyl DOHC 16V Dual VVT Engine	DD7 = 5-Speed Manual T355 Transmission DEF = 6-Speed Manual Aisin BG6 Trans DAV = Continuously Variable Transmission DAW = Cont.Var. w/Off-Rd Crawl Ratio Trans

AR = use ase required - = Non illustrrated part

Throttle Body
Figure 14-610

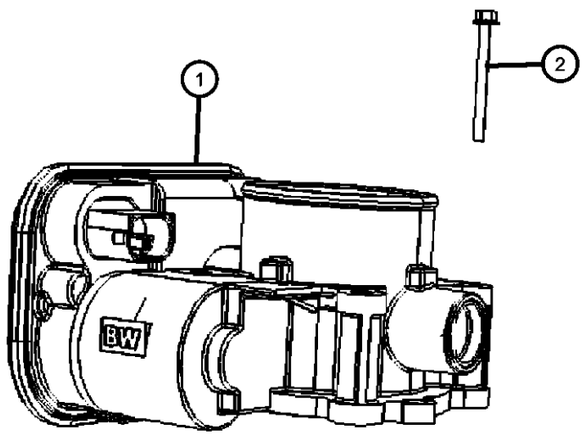

ITEM	PART NUMBER	QTY	LINE	SERIES	BODY	ENGINE	TRANS	TRIM	DESCRIPTION
1									THROTTLE BODY
	04891735AC	1				ED3			
	68001585AA	1	J, T, U		49, 74	ECD			
2	06104189AA	4				ED3			SCREW, Hex Flange Head, M6X1.0X60.0, THROTTLE BODY TO INTAKE MANIFOLD

COMPASS/PATRIOT (MK)

SERIES	LINE	BODY	ENGINE	TRANSMISSION
H = HIGHLINE L = LOWLINE P = PREMIUM	J = JEEP - 4WD T = JEEP - 2WD	49 = HATCHBACK TYPE #2 74 = SPORT UTILITY 4-DR TYPE #4	ED3 = 2.4L 4 Cyl DOHC 16V Dual VVT Engine	DD7 = 5-Speed Manual T355 Transmission DEF = 6-Speed Manual Aisin BG6 Trans DAV = Continuously Variable Transmission DAW = Cont.Var. w/Off-Rd Crawl Ratio Trans

Air Cleaner Gas
Figure 14-810

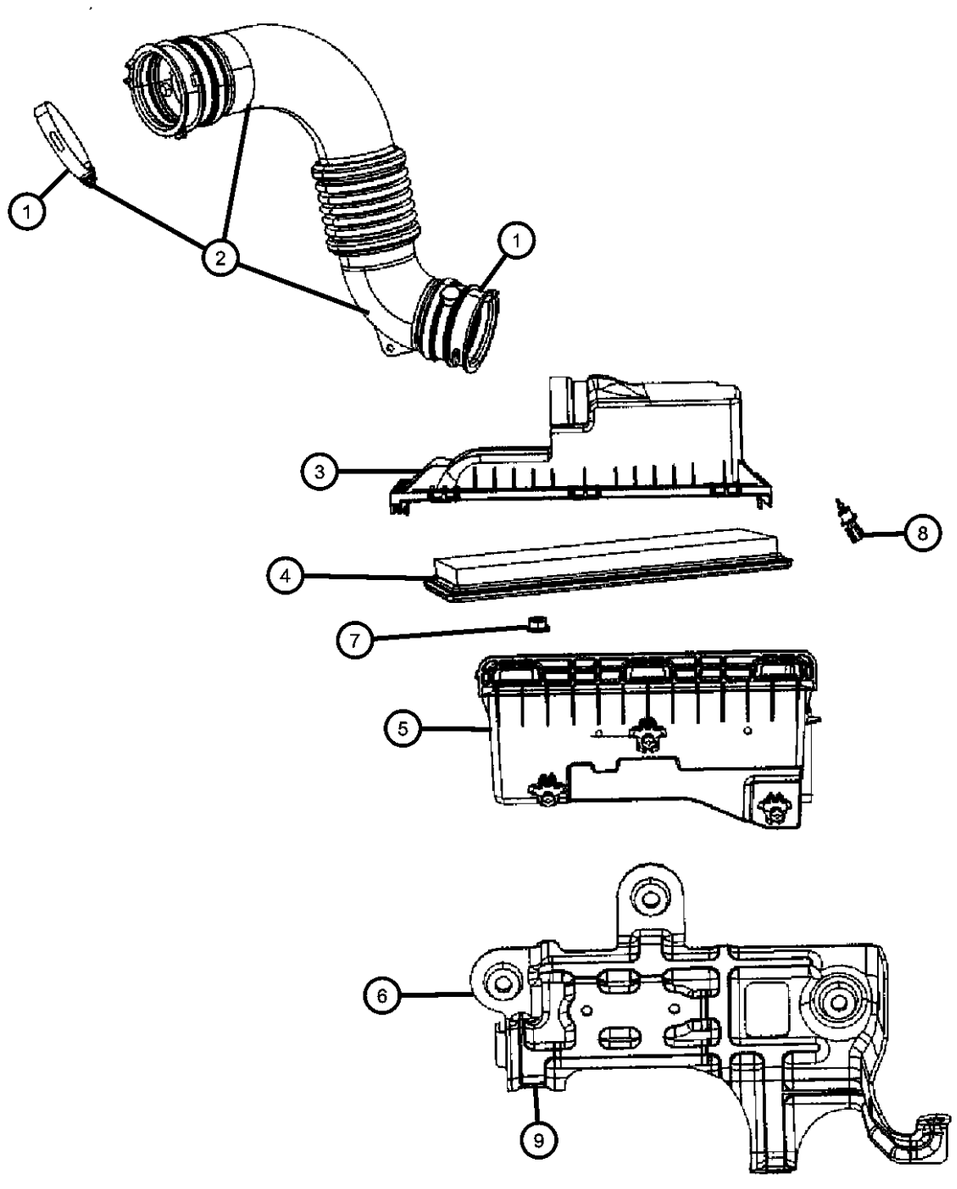

ITEM	PART NUMBER	QTY	LINE	SERIES	BODY	ENGINE	TRANS	TRIM	DESCRIPTION
1	06508369AA	2				ED3			CLAMP, Clean Air Hose
2									HOSE, Clean Air
	04891794AA	1				ECD			
	04891621AC	1				ED3			
3	05183088AB	1				ED3			COVER, Air Cleaner
4	04891694AA	1				ED3			ELEMENT, Air Cleaner
	77060012								Performance Cold Air System, PM, 2007-2007, 2.4L
	P5153573								Performance Air Filter, PM, 2007-2007, 2.0L/2.4L
5	05183089AA	1	J		49	ED3			BODY, Air Cleaner
6	04891638AA	1				ECD, ED3			BRACKET, Air Cleaner
7	06104709AA	2				ECD, ED3			NUT, M8, ENGINE AIR CLEANER BRKT TO BODY
8	04606487AB	1				ED3			SENSOR, Charge Air Temp
9	06105049AA	1				ECD, ED3			SCREW, Hex Flange Head, M8x1.25x25.00, ENGINE AIR CLEANER BRKT TO BODY

COMPASS/PATRIOT (MK)

SERIES	LINE	BODY	ENGINE	TRANSMISSION
H = HIGHLINE L = LOWLINE P = PREMIUM	J = JEEP - 4WD T = JEEP - 2WD	49 = HATCHBACK TYPE #2 74 = SPORT UTILITY 4-DR TYPE #4	ED3 = 2.4L 4 Cyl DOHC 16V Dual VVT Engine	DD7 = 5-Speed Manual T355 Transmission DEF = 6-Speed Manual Aisin BG6 Trans DAV = Continuously Variable Transmission DAW = Cont.Var. w/Off-Rd Crawl Ratio Trans

AR = use ase required - = Non illustrrated part

Air Cleaner Diesel
Figure 14-820

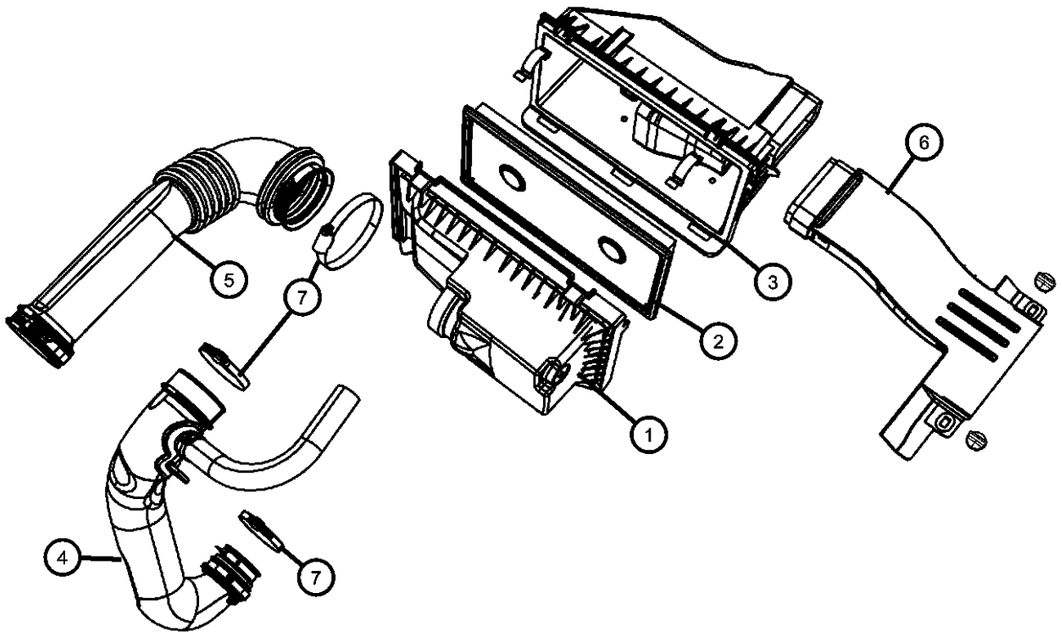

ITEM	PART NUMBER	QTY	LINE	SERIES	BODY	ENGINE	TRANS	TRIM	DESCRIPTION
1	05183087AA	1	J, T, U		49	ECD			COVER, Air Cleaner
2	04891695AA	1	J, T, U		49	ECD			ELEMENT, Air Cleaner
3	05183089AA	1	J, T, U		49	ECD			BODY, Air Cleaner
4	04891634AD	1	J, T, U		49	ECD			HOSE, Clean Air
5	04891634AD	1	J, T, U		49	ECD			HOSE, Clean Air
6	04891647AA	1				ECD			DUCT, Fresh Air
7	04891647AA	1							CLAMP, (NOT SERVICED)

COMPASS/PATRIOT (MK)

SERIES	LINE	BODY	ENGINE	TRANSMISSION
H = HIGHLINE L = LOWLINE P = PREMIUM	J = JEEP - 4WD T = JEEP - 2WD	49 = HATCHBACK TYPE #2 74 = SPORT UTILITY 4-DR TYPE #4	ED3 = 2.4L 4 Cyl DOHC 16V Dual VVT Engine	DD7 = 5-Speed Manual T355 Transmission DEF = 6-Speed Manual Aisin BG6 Trans DAV = Continuously Variable Transmission DAW = Cont.Var. w/Off-Rd Crawl Ratio Trans

AR = use ase required - = Non illustrrated part

Air Intake
Figure 14-910

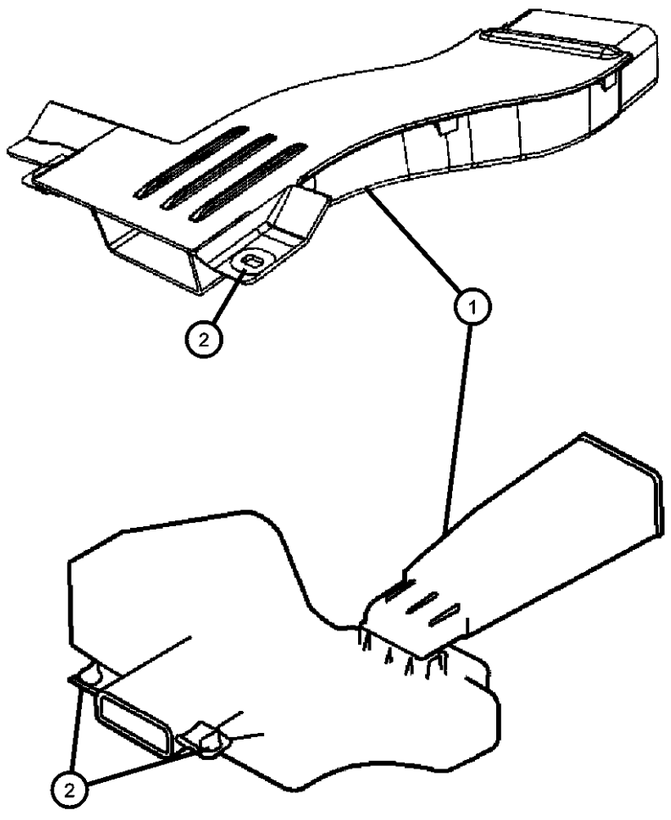

ITEM	PART NUMBER	QTY	LINE	SERIES	BODY	ENGINE	TRANS	TRIM	DESCRIPTION
1	04891646AD	1	J, T, U		49	ECD, ECN, ED3			DUCT, Fresh Air
2	06508655AA	2	J, T, U		49	ECD, ECN, ED3			PIN, M9.2X14.50, SC/SPECIALTY

COMPASS/PATRIOT (MK)

SERIES	LINE	BODY	ENGINE	TRANSMISSION
H = HIGHLINE L = LOWLINE P = PREMIUM	J = JEEP - 4WD T = JEEP - 2WD	49 = HATCHBACK TYPE #2 74 = SPORT UTILITY 4-DR TYPE #4	ED3 = 2.4L 4 Cyl DOHC 16V Dual VVT Engine	DD7 = 5-Speed Manual T355 Transmission DEF = 6-Speed Manual Aisin BG6 Trans DAV = Continuously Variable Transmission DAW = Cont.Var. w/Off-Rd Crawl Ratio Trans

Accelerator Pedal
Figure 14-1110

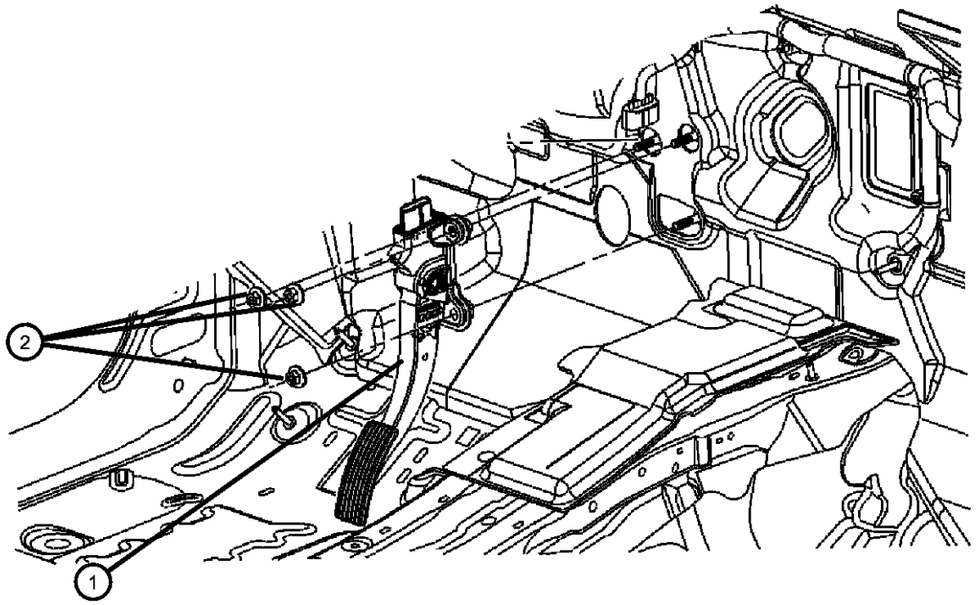

ITEM	PART NUMBER	QTY	LINE	SERIES	BODY	ENGINE	TRANS	TRIM	DESCRIPTION
1									PEDAL, Accelerator
	04891585AB	1	J, T				DEF		Left Hand
		1	J, T				DD7, DD9		Left Hand
		1					DD7		Left Hand
	04891586AB	1	U				DD7, DD9		Right Hand
		1	U				DEF		Right Hand
	04891623AA	1					DAV		Left Hand
	04891623AB	1	J, T				DAV, DAW		Left Hand
	04891629AB	1	U				DAV, DAW		Right Hand
2	06104716AA	3							NUT, PEDAL TO DASH PANEL

COMPASS/PATRIOT (MK)

SERIES	LINE	BODY	ENGINE	TRANSMISSION
H = HIGHLINE L = LOWLINE P = PREMIUM	J = JEEP - 4WD T = JEEP - 2WD	49 = HATCHBACK TYPE #2 74 = SPORT UTILITY 4-DR TYPE #4	ED3 = 2.4L 4 Cyl DOHC 16V Dual VVT Engine	DD7 = 5-Speed Manual T355 Transmission DEF = 6-Speed Manual Aisin BG6 Trans DAV = Continuously Variable Transmission DAW = Cont.Var. w/Off-Rd Crawl Ratio Trans

Group - 16

Propeller Shafts and U-Joints

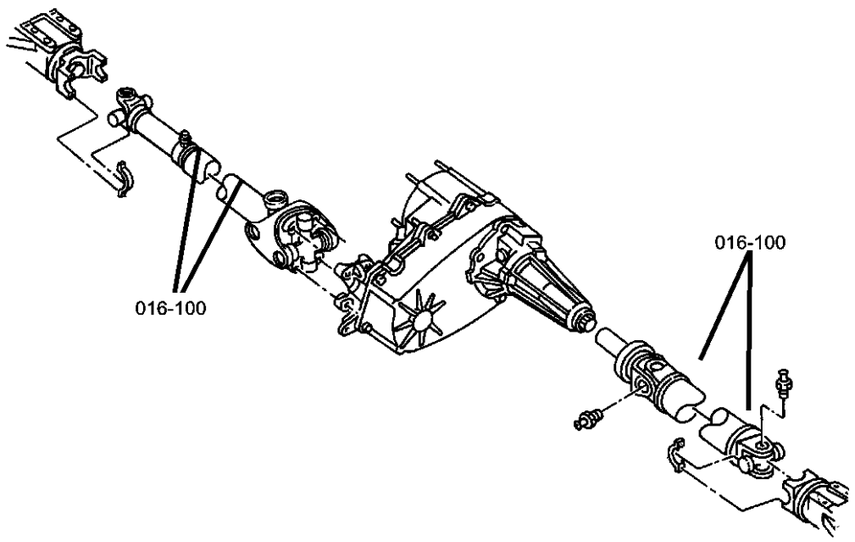

016-100 Propeller Shaft 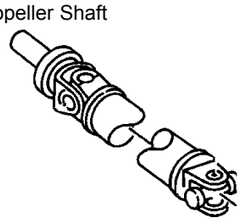			

Illustration Title — Group-Fig. No.

Propeller Shaft
Propshaft,Rear ..... Fig. 16 - 110

Propshaft,Rear
Figure 16-110

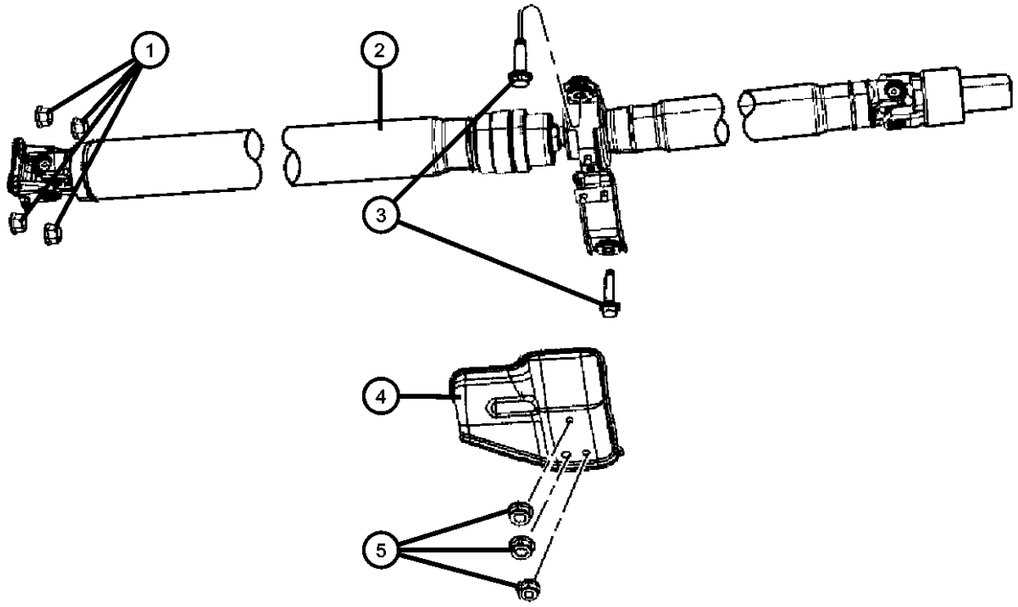

ITEM	PART NUMBER	QTY	LINE	SERIES	BODY	ENGINE	TRANS	TRIM	DESCRIPTION
1	05105715AA	4	J, U		49, 74				NUT, Locking, Drive Shaft to ECC, Mounting
2	05273310AA	1	J, U		49, 74				SHAFT, Drive, Rear
3	06104422AA	2	J, U		49, 74				BOLT AND WASHER, Hex Head, Drive Shaft Center Bearing to Body, Mounting
4	05105640AA	1	J, U		49, 74				SHIELD, Heat, Center Bearing
5	06104716AA	3	J, U		49, 74				NUT, Heat Shield to Center Bearing, Mounting

COMPASS/PATRIOT (MK)

SERIES	LINE	BODY	ENGINE	TRANSMISSION
H = HIGHLINE L = LOWLINE P = PREMIUM	J = JEEP - 4WD T = JEEP - 2WD	49 = HATCHBACK TYPE #2 74 = SPORT UTILITY 4-DR TYPE #4	ED3 = 2.4L 4 Cyl DOHC 16V Dual VVT Engine	DD7 = 5-Speed Manual T355 Transmission DEF = 6-Speed Manual Aisin BG6 Trans DAV = Continuously Variable Transmission DAW = Cont.Var. w/Off-Rd Crawl Ratio Trans

Group - 17

Rear Suspension

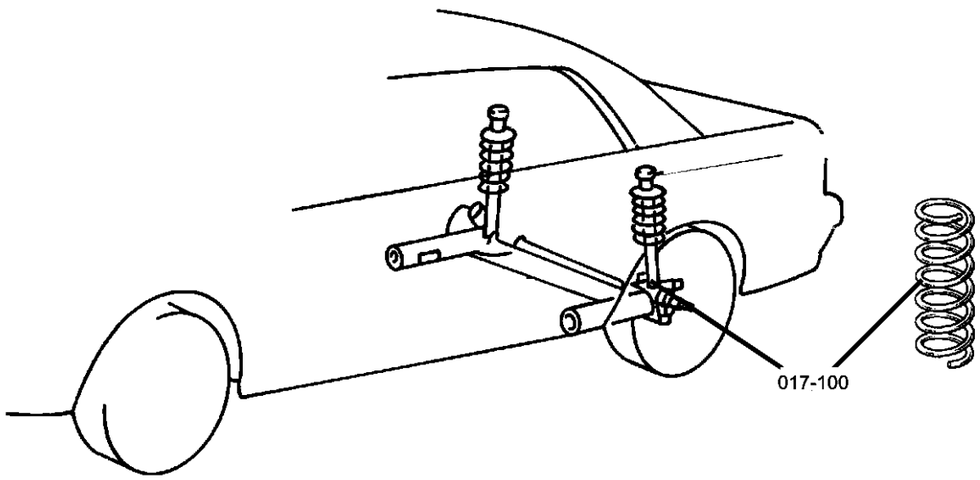

017-100 Rear Suspension 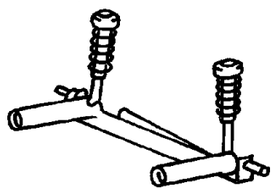	**017-200** Stablizer Bar, Rear 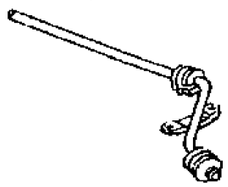		

Group - 17 Rear Suspension

Illustration Title — Group-Fig. No.

Rear Suspension
Suspension Rear ..... Fig. 17 - 110

Stablizer Bar, Rear
Stabilizer Bar,Rear ..... Fig. 17 - 210

Suspension Rear
Figure 17-110

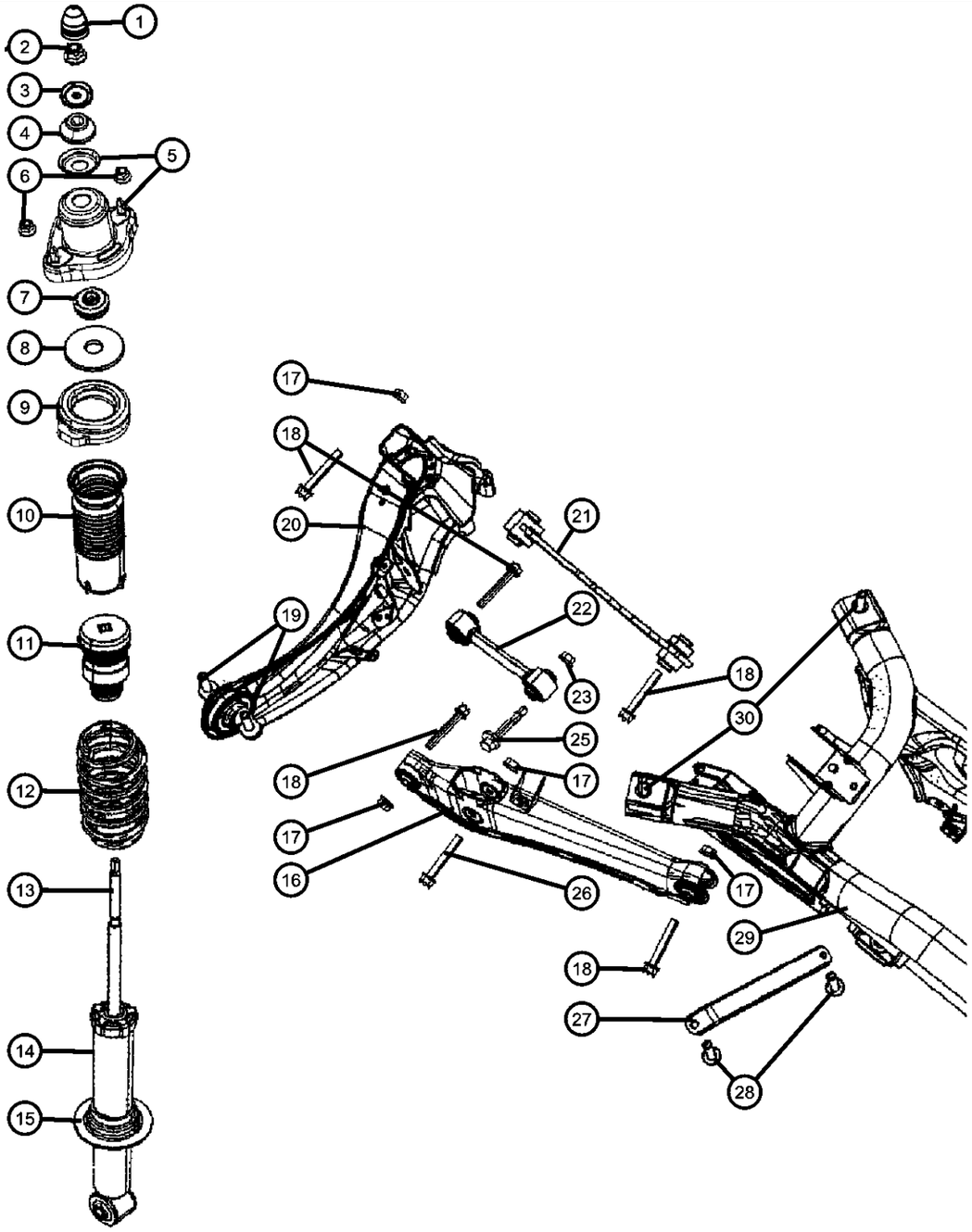

ITEM	PART NUMBER	QTY	LINE	SERIES	BODY	ENGINE	TRANS	TRIM	DESCRIPTION
1	05105949AA	2	J, T, U		49, 74				CAP, Suspension Strut
2	06503335	2							NUT, Hex, M10X1.25, Shock to Shock Mount, Mounting
3	05085529AA	2							WASHER, Shock Absorber, Shock Mount to Bushing, Mounting
4	05085525AA	2	J, T, U		49, 74				BUSHING, Shock AbsorberUpper
5	05085495AC	2	J, T, U		49, 74				BRACKET, Shock AbsorberUpper
6	06503335	4	J, T, U		49, 74				NUT, Hex, M10X1.25, Shock Mount to Body, Mounting
7	05105879AA	2	J, T, U		49, 74				BUSHING, Shock AbsorberLower
8	05085534AA	2							PLATE, Shock AbsorberMounting
9	05085505AD	2	J, T, U		49, 74				ISOLATOR, Rear Suspension SpringUpper
10	05105104AC	2	J, T, U		49, 74				SHIELD, Suspension, Dust
11	05272705AB	2	J, T, U		49, 74				BUMPER, Jounce
12									SPRING, Suspension, Rear
	05105891AB	1	J, T, U		49				[ZFR,ZUR]
		1	J, T, U		74				[ZFR,ZUR]
	05105892AB	1	J, T, U		49				[ZFS,ZUS]
		1	J, T, U		74				[ZFS,ZUS]
	05105893AB	1	J, T, U		74				[ZFT,ZUT]
	05105894AB	1	J, T, U		49				[ZFU,ZUU]
		1	J, T, U		74				[ZFU,ZUU]
	05105895AB	1	J, T, U		49				[ZFV,ZUV]
		1	J, T, U		74				[ZFV,ZUV]
		1	J, T, U		49				[ZFT,ZUT]
	05105983AA	1	J, T, U		49				[ZET,ZTT]
	05105981AA	1	J, T, U		49				[ZER,ZTR]
		1	J, T, U		74				[ZER,ZTR]
	05105982AA	1	J, T, U		49				[ZES,ZTS]
		1	J, T, U		74				[ZES,ZTS]
		1	J, T, U		74				[ZET,ZTT]
13	05085519AA	2	J, T, U		49, 74				SLEEVE, Shock AbsorberMounting
14									SHOCK ABSORBER, Suspension, Rear
	05272718AA	2	J, T, U		49				[SDC] With [AWL]

COMPASS/PATRIOT (MK)

SERIES	LINE	BODY	ENGINE	TRANSMISSION
H = HIGHLINE L = LOWLINE P = PREMIUM	J = JEEP - 4WD T = JEEP - 2WD	49 = HATCHBACK TYPE #2 74 = SPORT UTILITY 4-DR TYPE #4	ED3 = 2.4L 4 Cyl DOHC 16V Dual VVT Engine	DD7 = 5-Speed Manual T355 Transmission DEF = 6-Speed Manual Aisin BG6 Trans DAV = Continuously Variable Transmission DAW = Cont.Var. w/Off-Rd Crawl Ratio Trans

Suspension Rear
Figure 17-110

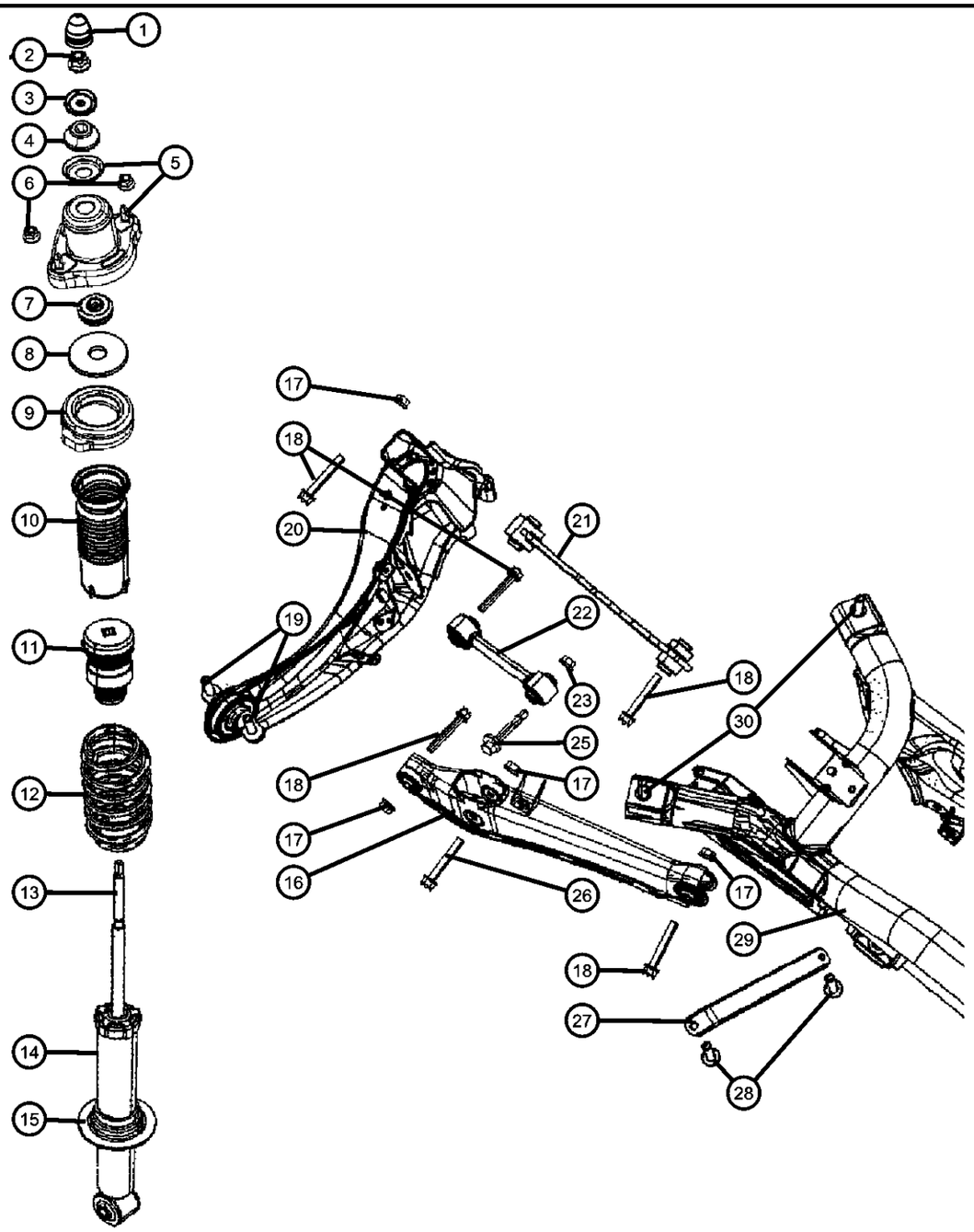

ITEM	PART NUMBER	QTY	LINE	SERIES	BODY	ENGINE	TRANS	TRIM	DESCRIPTION
		2	J, T, U		74				[SDC] With [AWL]
	05105178AE	2	J, T, U		49				[SDC]
		2	J, T, U		74				[SDC]
	05105179AE	2	J, T, U		49, 74				[SDF]
15	05085528AA	2	J, T, U		49, 74				ISOLATOR, Rear Suspension SpringLower
16									LINK, Rear Lateral
	05105272AB	2					DAV, DEF		Lower
		2					DD7		Lower
	05105688AB	2	J, T, U		74		DAW		Lower
17									NUT, M12
	06104711AA	2							Rear Lower Lateral Link to Rear Crossmember, Mounting
		2							Rear Lower Lateral Link to Rear Trailing Link, Mounting
		2	J, T, U		49, 74				Shock to Rear Lower Lateral Link, Mounting
		2							Rear Upper Lateral Link to Rear Trailing Link, Mounting
18									SCREW
	06104243AA	2							Rear Toe Link to Rear Trailing Link, Mounting
		2							Rear Lower Lateral Link to Rear Trailing Link, Mounting
		2	J, T, U		49, 74				Rear Lower Lateral Link to Rear Crossmember, Mounting
		2	J, T, U		49, 74				Rear Upper Lateral Link to Rear Crossmember, Mounting
		2	J, T, U		49, 74				Rear Lower Lateral Link to Rear Trailing Link, Mounting
		2	J, T, U		49, 74				Rear Upper Lateral Link to Rear Trailing Link, Mounting
19	06508511AA	4	J, T, U		49, 74				BOLT, Hex Flange Head, Rear Trailing Link to Rear Body, Mounting
20									LINK, Trailing Rear Suspension
	05105930AA	1	J, T, U		49				Right
		1	J, T, U		74				Right
	05272714AC	1	J, T, U		49, 74				Right

COMPASS/PATRIOT (MK)

SERIES	LINE	BODY	ENGINE	TRANSMISSION
H = HIGHLINE L = LOWLINE P = PREMIUM	J = JEEP - 4WD T = JEEP - 2WD	49 = HATCHBACK TYPE #2 74 = SPORT UTILITY 4-DR TYPE #4	ED3 = 2.4L 4 Cyl DOHC 16V Dual VVT Engine	DD7 = 5-Speed Manual T355 Transmission DEF = 6-Speed Manual Aisin BG6 Trans DAV = Continuously Variable Transmission DAW = Cont.Var. w/Off-Rd Crawl Ratio Trans

AR = use ase required - = Non illustrrated part

Suspension Rear
Figure 17-110

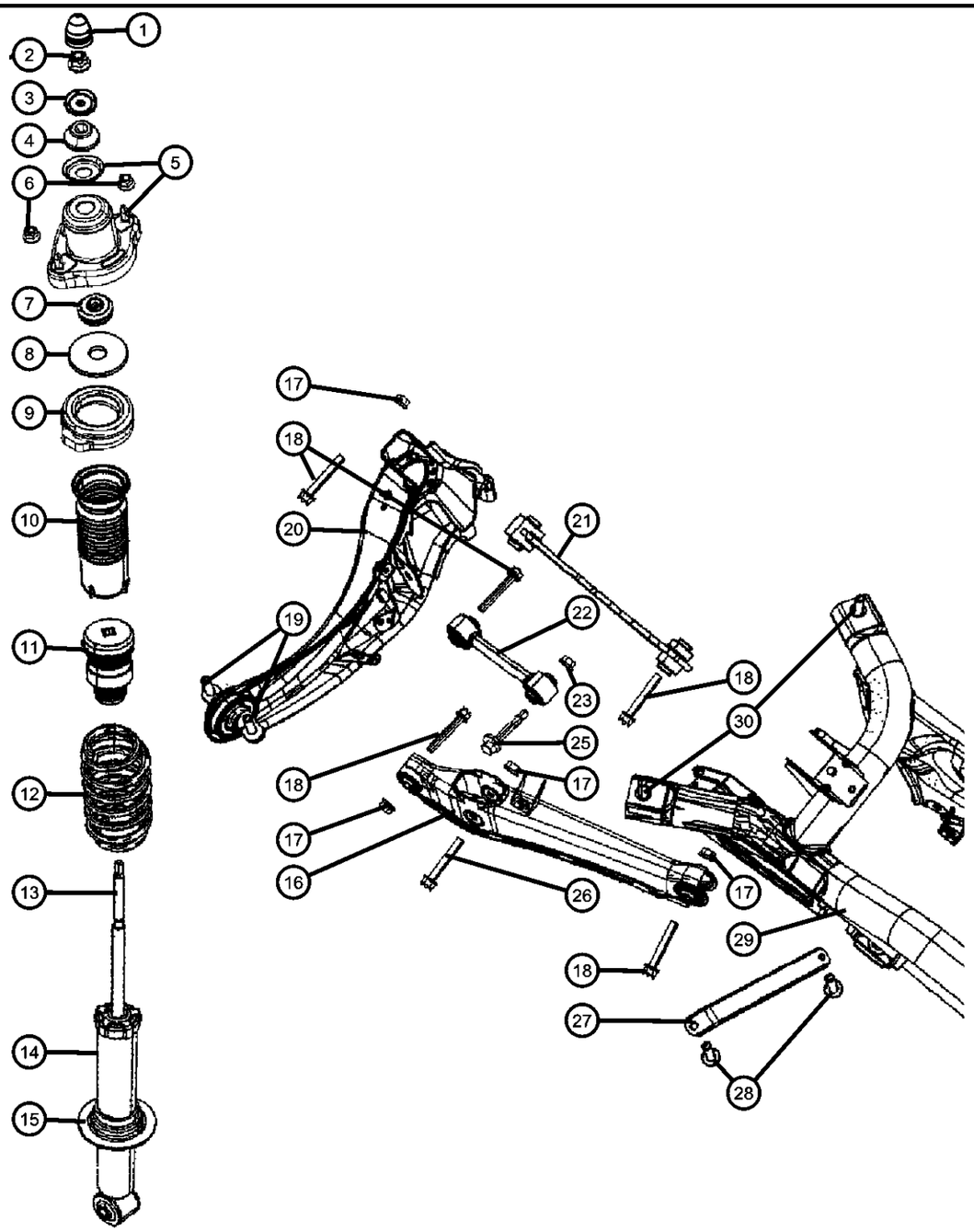

ITEM	PART NUMBER	QTY	LINE	SERIES	BODY	ENGINE	TRANS	TRIM	DESCRIPTION
	05105927AA	1	J, T, U		49				Left
		1	J, T, U		74				Left
	05272715AC	1	J, T, U		49, 74				Left
21	05105271AA	2	J, T, U		49, 74				LINK, Rear LateralUpper
22	05105270AA	2	J, T, U		49, 74				LINK, Rear Toe
23	06508487AA	2	J, T, U		49, 74				NUT, Hex Flange, Rear Toe Link to Rear Crossmember, Mounting
-24	06508488AA	2	J, T, U		49, 74				WASHER, Rear Toe Link to Rear Crossmember, Mounting
25	06508486AA	2	U, J, T		49, 74				BOLT, Rear Toe Link to Rear Crossmember, Mounting
26	06508628AA	2	J, T, U		49, 74				SCREW, Shock to Rear Lower Laterial Link, Mounting
27	05105337AA	2	J, T, U		49, 74				BRACE, Suspension
28	06104196AA	4	J, T, U		49, 74				BOLT, Hex Head, Suspension Brace to Rear Crossmember, Mounting
29									CROSSMEMBER, Rear Suspension
	05105252AB	1	J, U		49, 74				
	05105251AB	1	T		49, 74				
30	06508743AA	4	J, T, U		49, 74				BOLT, Hex Flange Head, Rear Suspension Crossmember to Body, Mounting

COMPASS/PATRIOT (MK)

SERIES	LINE	BODY	ENGINE	TRANSMISSION
H = HIGHLINE L = LOWLINE P = PREMIUM	J = JEEP - 4WD T = JEEP - 2WD	49 = HATCHBACK TYPE #2 74 = SPORT UTILITY 4-DR TYPE #4	ED3 = 2.4L 4 Cyl DOHC 16V Dual VVT Engine	DD7 = 5-Speed Manual T355 Transmission DEF = 6-Speed Manual Aisin BG6 Trans DAV = Continuously Variable Transmission DAW = Cont.Var. w/Off-Rd Crawl Ratio Trans

AR = use ase required - = Non illustrrated part

Stabilizer Bar,Rear
Figure 17-210

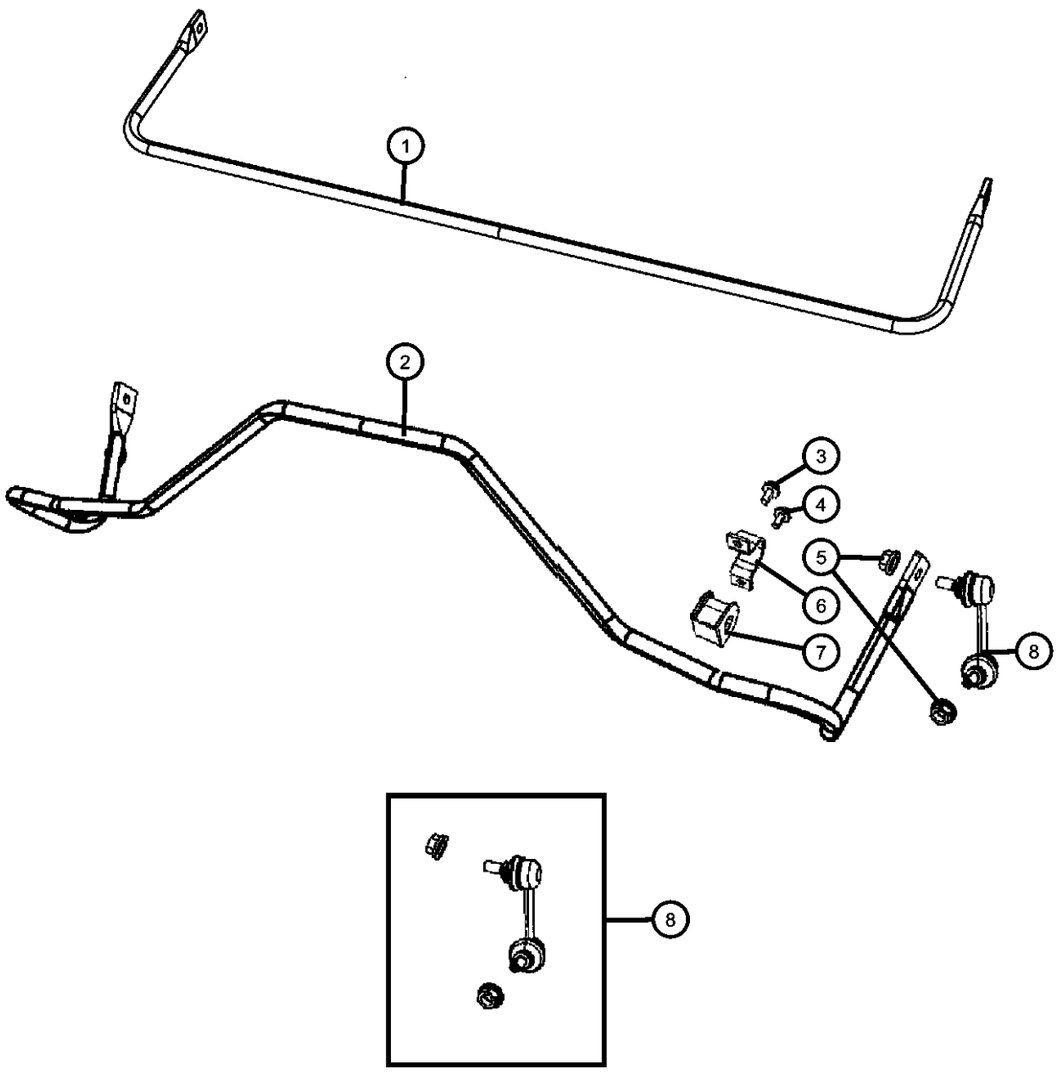

ITEM	PART NUMBER	QTY	LINE	SERIES	BODY	ENGINE	TRANS	TRIM	DESCRIPTION
1	05105887AA	1	T		49, 74				STABILIZER BAR, Rear Suspension
2	05105886AA	1	J, U		49, 74				STABILIZER BAR, Rear Suspension
3	06104388AA	2	J, T, U		49, 74				SCREW, Sway Bar to Subframe, Upper
4	06101758	2	J, T, U		49, 74				SCREW, Hex Head, M8x1.25x20, Sway Bar to Subframe, Lower
5									NUT & WASHER, Hex, M10 X 1.25
	06508961AA	2	J, T, U		49, 74				Link to Swaybar, Mounting
		2	J, T, U		49, 74				Link to Front Suspension, Mounting
6	05105566AA	2	J, T, U		49, 74				RETAINER, Stabilizer Bar GrommetMounting
7	05105878AA	2	J, T, U		49, 74				CUSHION, Sway Eliminator
8	05174245AA	2	J, T, U		49, 74				LINK PACKAGE, Stabilizer Bar

COMPASS/PATRIOT (MK)

SERIES	LINE	BODY	ENGINE	TRANSMISSION
H = HIGHLINE L = LOWLINE P = PREMIUM	J = JEEP - 4WD T = JEEP - 2WD	49 = HATCHBACK TYPE #2 74 = SPORT UTILITY 4-DR TYPE #4	ED3 = 2.4L 4 Cyl DOHC 16V Dual VVT Engine	DD7 = 5-Speed Manual T355 Transmission DEF = 6-Speed Manual Aisin BG6 Trans DAV = Continuously Variable Transmission DAW = Cont.Var. w/Off-Rd Crawl Ratio Trans

Group - 19

Steering

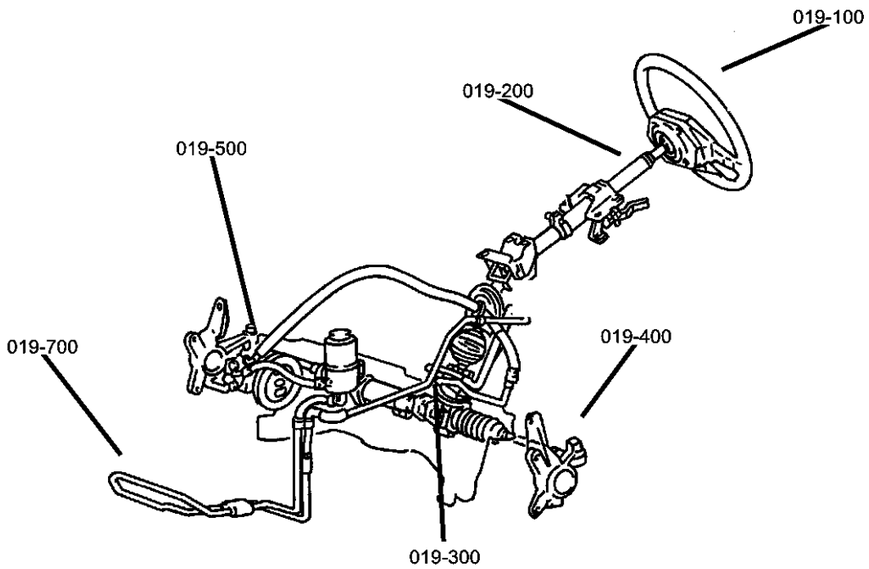

019-100 Steering Wheel 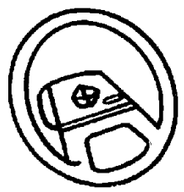	**019-200** Steering Column 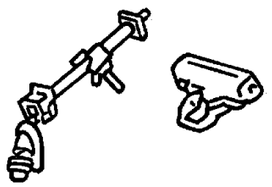	**019-300** Steering Gear 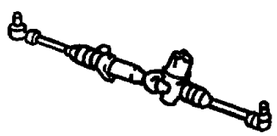	**019-500** Power Steering Pump 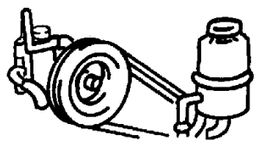
019-700 Power Steering Hoses 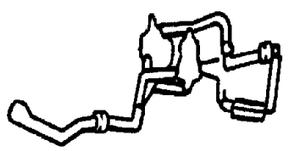			

Group - 19 Steering

Illustration Title — Group-Fig. No.

Steering Wheel
Steering Wheel ..... Fig. 19 - 110

Steering Column
Column,Steering Upper and Lower ..... Fig. 19 - 210

Steering Gear
Gear, Rack and Pinion and Attaching Parts ..... Fig. 19 - 310

Power Steering Pump
Pump, Assembly Mounting ..... Fig. 19 - 510
Reservoir and Bracket ..... Fig. 19 - 520

Power Steering Hoses
Hoses, Power Steering ..... Fig. 19 - 710

Steering Wheel
Figure 19-110

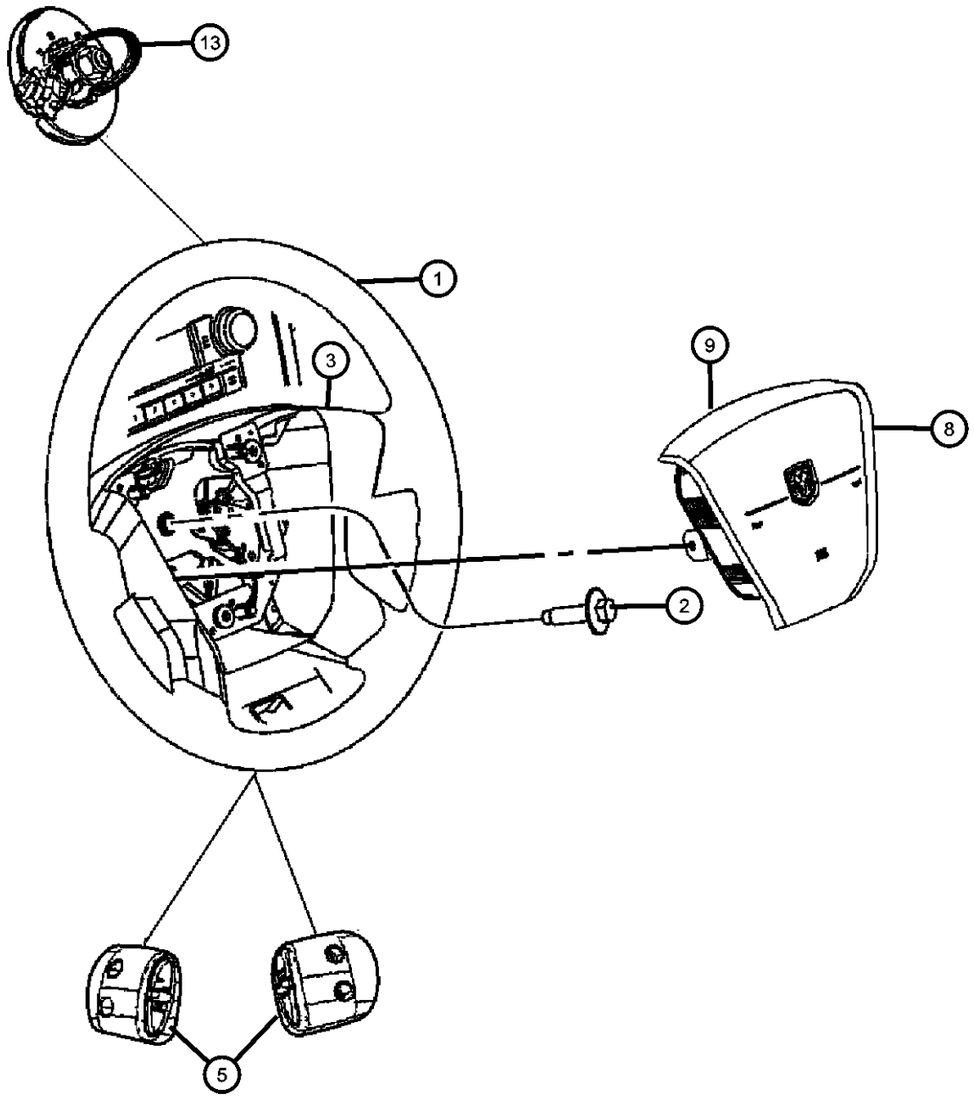

ITEM	PART NUMBER	QTY	LINE	SERIES	BODY	ENGINE	TRANS	TRIM	DESCRIPTION

NOTES: Sales Codes:
[BNB] = Electronic Stability Program
[CG1] = Next Generation Multistage Front Airbags
[JHA] = Variable Intermittent Windshield Wipers
[JHB] = Rear Window Wiper/Washer
[LNJ] = Fog Lamps
[LPG] = Rear Fog Lamps
[NHM] = Speed Control
[RDZ] = Steering Mounted Audio Controls
[SCA] = Steering Wheel
[SCJ] = Leather Wrapped Steering Wheel
[X81] = Instrument Panel Parts Module

ITEM	PART NUMBER	QTY	LINE	SERIES	BODY	ENGINE	TRANS	TRIM	DESCRIPTION
1									WHEEL, Steering
	1EB83DK7AA	1							[KA] With Speed Control [NHM]
	1EB861DVAA	1							[DA] With Speed Control [NHM] & Steering Mounted Audio Controls [RDZ]
	1EB83XDVAA	1							[DA] With Speed Control [NHM]
	1EB86DK7AA	1							[KA] With Speed Control [NHM] & Steering Mounted Audio Controls [RDZ]
2	06505656AA	1							SCREW, Hex Flange Head, M10x1.5x35., Steering Wheel to Column
3									COVER, Steering Wheel Back
	1EB85DK7AA	1	J						[KA] Without Speed Control [NHM]
	1EB85XDVAA	1							[DA] Without Speed Control [NHM]
	1EB84DK7AA	1							[KA] With Speed Control [NHM]
	1EB84XDVAA	1							[DA] With Speed Control [NHM]
	1ES101DVAA	1							[DA] [SCC] Leather Wrapped Steering Wheel with [NHM] Speed Control with [RDZ] Wheel Mounted Audio Controls
	1ES10DK7AA	1							[KA] [SCC] Leather Wrapped Steering Wheel with [NHM] Speed Control with [RDZ] Wheel Mounted Audio Controls
-4	68000462AA	1							WIRING, Speed Control, See Wiring Group 008, [NHM] With Speed Control

COMPASS/PATRIOT (MK)

SERIES	LINE	BODY	ENGINE	TRANSMISSION
H = HIGHLINE L = LOWLINE P = PREMIUM	J = JEEP - 4WD T = JEEP - 2WD	49 = HATCHBACK TYPE #2 74 = SPORT UTILITY 4-DR TYPE #4	ED3 = 2.4L 4 Cyl DOHC 16V Dual VVT Engine	DD7 = 5-Speed Manual T355 Transmission DEF = 6-Speed Manual Aisin BG6 Trans DAV = Continuously Variable Transmission DAW = Cont.Var. w/Off-Rd Crawl Ratio Trans

Steering Wheel
Figure 19-110

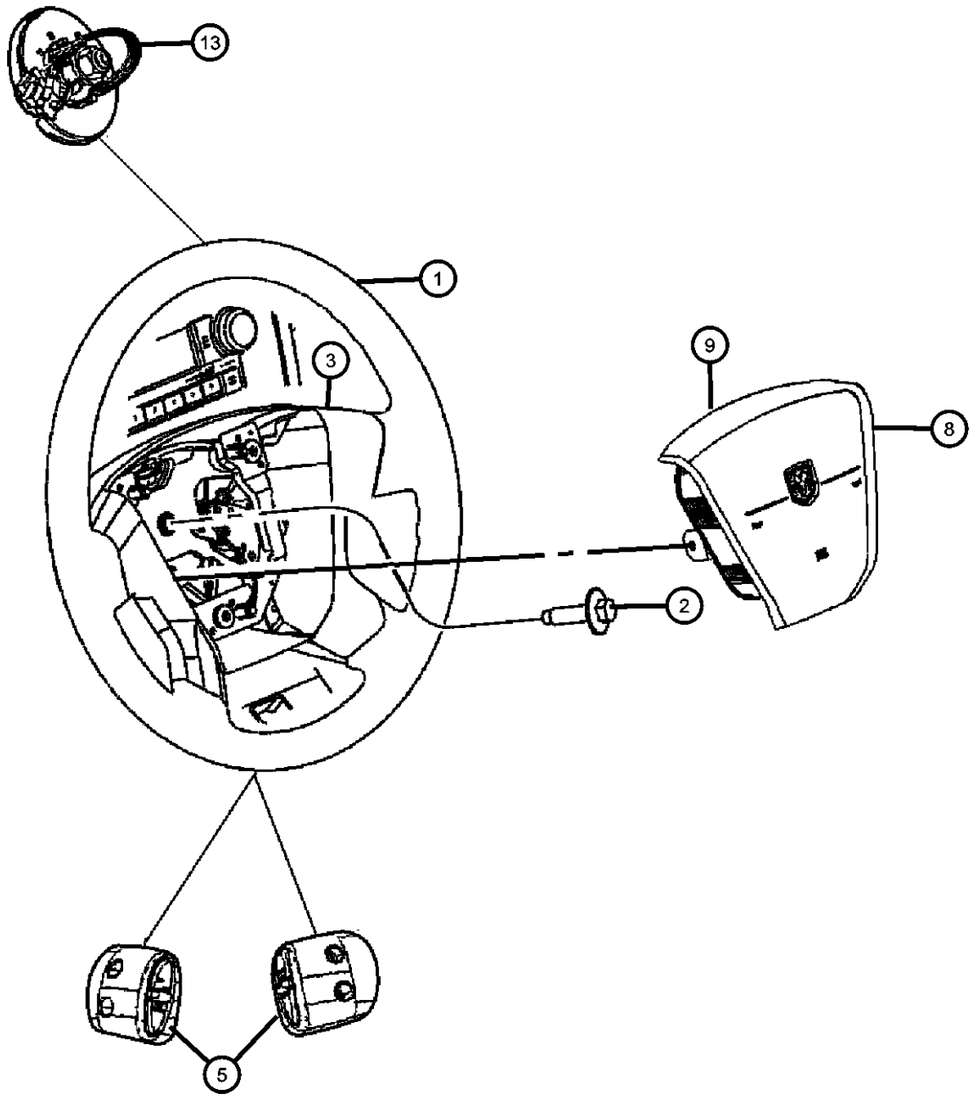

ITEM	PART NUMBER	QTY	LINE	SERIES	BODY	ENGINE	TRANS	TRIM	DESCRIPTION
5	04671929AA	1							SWITCH, Speed Control, [NHM] With Speed Control & Steering Mounted Audio Control [RDZ]
-6	05183947AA	1							SWITCH, Multifunction, Turn Signal with Front Fog
-7	05183957AA	1							SWITCH, Wiper, Front & Rear Wiper
8									AIR BAG, Driver
	0YD59DK7AB	1	J, T, U						[KA] Sales Code [CG1] Next Generation Multistage Front Airbags, Driver
	0YD59XDVAB	1	J, T, U						[DA] Sales Code [CG1] Next Generation Multistage Front Airbags, Driver
	1BL23DK7AB	1	J, T, U						[KA] Delete Driver Airbag
	1BL23XDVAB	1	J, T, U						[DA] Delete Driver Airbag
9									COVER, Air Bag Module
	1FA18DK7AA	1	J, T, U						[KA] [CG1] Advanced Multistage Front Air Bags
	1FA18XDVAA	1	J, T, U						[DA] [CG1] Advanced Multistage Front Air Bags
	1FA25DK7AA	1	J, T, U						[KA] [CGJ] Restraint System without Air Bags
	1FA25XDVAA	1	J, T, U						[DA] [CGJ] Restraint System without Air Bags
-10	06105037AA	2							BOLT, Hex Flange Head, Drive Air Bag to Steering Wheel
-11	06505656AA	1							SCREW, Hex Flange Head, M10x1.5x35., Steering Wheel to Column
-12	06104240AA	2							BOLT, Hex Flange Head, Driver Air Bag to Steering
13									CLOCKSPRING
	05183960AA	1							With Electronic Stability [BNB] & Fog Lamps [LNJ]
	05175901AA	1							With & Without Fog Lamps [LNJ] With & Without Rear Fog Lamps [LPG]
	68000477AA	1	J, T, U						With Electronic Stability [BNB] & With & Without Fog Lamps [LNJ] & With & Without Rear Fog Lamps [LPG]

COMPASS/PATRIOT (MK)

SERIES	LINE	BODY	ENGINE	TRANSMISSION
H = HIGHLINE L = LOWLINE P = PREMIUM	J = JEEP - 4WD T = JEEP - 2WD	49 = HATCHBACK TYPE #2 74 = SPORT UTILITY 4-DR TYPE #4	ED3 = 2.4L 4 Cyl DOHC 16V Dual VVT Engine	DD7 = 5-Speed Manual T355 Transmission DEF = 6-Speed Manual Aisin BG6 Trans DAV = Continuously Variable Transmission DAW = Cont.Var. w/Off-Rd Crawl Ratio Trans

AR = use ase required - = Non illustrrated part

Column,Steering Upper and Lower
Figure 19-210

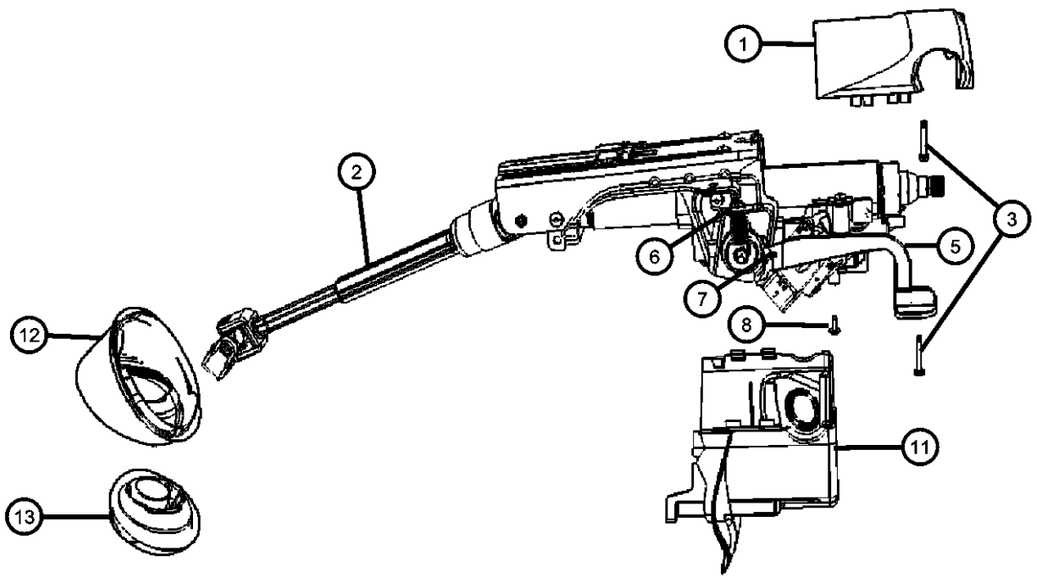

ITEM	PART NUMBER	QTY	LINE	SERIES	BODY	ENGINE	TRANS	TRIM	DESCRIPTION
NOTES: Sales Codes: [ABB] = European Equipment Group [DAV] = Continuously Variable Transmission [DD7] = 5 Speed Manual T355 Transmission [DEF] = 6-Speed Manual Aisin BG6 Transmission [LS9] = Thatcham Security Equipment									
1									SHROUD, Steering Column, Upper, Upper
	1CH69DK7AA	1	J, T, U						[KA]
	1CH69XDVAA	1	J, T, U						[DA]
2									COLUMN, Steering
	04664333AH	1					DD7, DEF		Tilt Manual Trans
	04664341AH	1	J, T				DAV, DAW		
	04664341AI	1					DAV, DAW		Tilt Auto Trans
	68004244AA	1	J						LHD [SUA] Tilt Steering Column-Lock Housings not Included
	68004247AA	1	U						[-LS9] Without Thatcham Security Equipment
	05057279AE	1							[ABB] With European Equipment Group
	05057334AH	1	U						[-LS9] Thatcham Security Equipment
	05057448AB	1	U						RHD [+LS9] WithThatcham Security Equipment
	05057448AE	1	U						[+LS9] Thatcham Security Equipment
	68004184AA	1	J				DAV, DAW		[-ABB] Without European Equipment Group
		1	J				DAV, DAW		[SUA] Tilt Steering Column-Lock Housings not Included
		1	J						[ABB] With European Equipment Group
3	06035434	2							SCREW AND WASHER, Pan Head
-4	06506707AA	4							NUT AND WASHER, Hex Lock Coned Washer, M8x1.25, Steering Column to I/P
5	05057170AD	1					DAV, DAW		LEVER, Tilt Column Release
6	05057180AA	2					DD7, DEF		SPRING, Tilt Assist
7	05057479AA	AR							NUT, Tilt Lever
8	06508440AA	1							SCREW

COMPASS/PATRIOT (MK)

SERIES	LINE	BODY	ENGINE	TRANSMISSION
H = HIGHLINE L = LOWLINE P = PREMIUM	J = JEEP - 4WD T = JEEP - 2WD	49 = HATCHBACK TYPE #2 74 = SPORT UTILITY 4-DR TYPE #4	ED3 = 2.4L 4 Cyl DOHC 16V Dual VVT Engine	DD7 = 5-Speed Manual T355 Transmission DEF = 6-Speed Manual Aisin BG6 Trans DAV = Continuously Variable Transmission DAW = Cont.Var. w/Off-Rd Crawl Ratio Trans

Column,Steering Upper and Lower
Figure 19-210

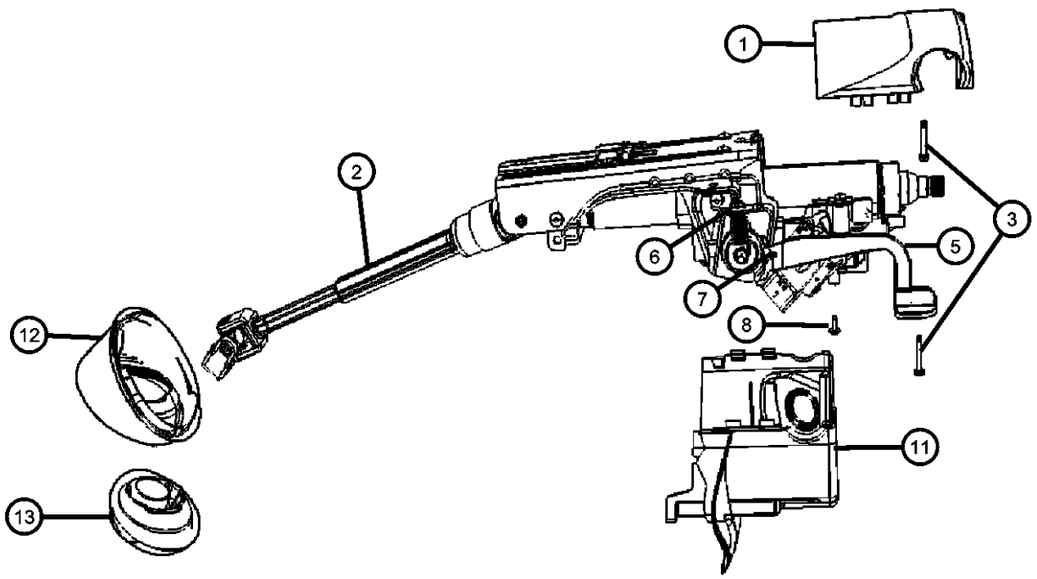

ITEM	PART NUMBER	QTY	LINE	SERIES	BODY	ENGINE	TRANS	TRIM	DESCRIPTION
-9	06508662AA	5	U						SCREW, M6X1.00X16.00, Upper Shield to Lower Shield
-10	06508657AA	2	U						SCREW, Pan Head, M5x0.8x8.00, Cup to Lock Housing
11									SHROUD, Steering Column, Lower, Lower
	1CH70DK7AA	1							[KA]
	1CH70XDVAA	1							[DA]
12	04664351AA	1							SEAL, Steering Column ShaftUpper
13	04664350AA	1							SEAL, Steering Column ShaftLower
-14	05057330AA	2							FASTENER, Steering Column Lock Housing
-15									HOUSING, Steering Column Lock
	05057296AC	1					DAV, DAW		Automatic Transmission
	05057297AC	1					DD7, DEF		Manual Transmission

COMPASS/PATRIOT (MK)

SERIES	LINE	BODY	ENGINE	TRANSMISSION
H = HIGHLINE L = LOWLINE P = PREMIUM	J = JEEP - 4WD T = JEEP - 2WD	49 = HATCHBACK TYPE #2 74 = SPORT UTILITY 4-DR TYPE #4	ED3 = 2.4L 4 Cyl DOHC 16V Dual VVT Engine	DD7 = 5-Speed Manual T355 Transmission DEF = 6-Speed Manual Aisin BG6 Trans DAV = Continuously Variable Transmission DAW = Cont.Var. w/Off-Rd Crawl Ratio Trans

Gear, Rack and Pinion and Attaching Parts
Figure 19-310

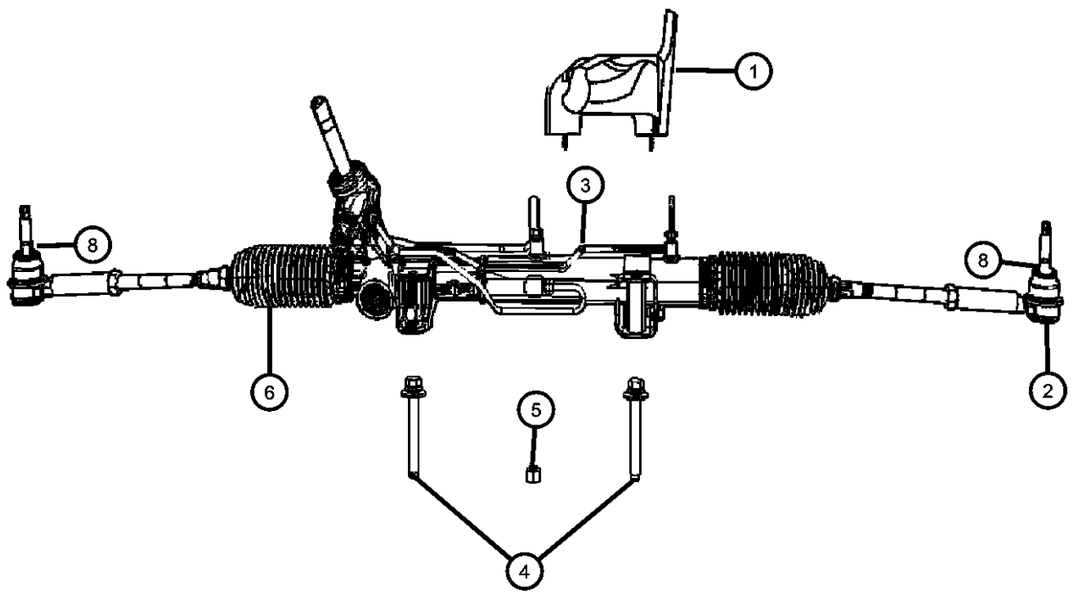

ITEM	PART NUMBER	QTY	LINE	SERIES	BODY	ENGINE	TRANS	TRIM	DESCRIPTION
NOTES: Sales Codes: [SBA] = Power Rack and Pinion Steering [SBB] = Firm Feel Power Steering									
1									SHIELD, Heat
	05105613AA	1	U						
	05105829AB	1	J, T						Left Hand Drive
2	05183761AA	2							END, Tie Rod
3	05073824AA	1							SCREW
4	06508725AA	2							BOLT, Steering Gear
5	06503046	2							NUT, Hex Lock, M12 x 1.25
6									GEAR, Power Steering
	05090004AB	1	J, T			ED3			
	05105046AC	1	T						[SBA] Power Rack & Pinion Steering
	05105084AC	1	U						[SBB] Firm Feel Power Steering
	05105085AC	1							[SBP] Performance Steering
	05105213AC	1	J						[SBA] Power Rack & Pinion Steering
-7	06508531AA	1	J, T, U						SCREW, Hex Flange Head, M10x1.50x39.00, Shaft to Steering Gear
8	06507629AA	2							NUT, Steering Gear Lock, Outer Tie Rod to Inner Tie Rod

COMPASS/PATRIOT (MK)

SERIES	LINE	BODY	ENGINE	TRANSMISSION
H = HIGHLINE L = LOWLINE P = PREMIUM	J = JEEP - 4WD T = JEEP - 2WD	49 = HATCHBACK TYPE #2 74 = SPORT UTILITY 4-DR TYPE #4	ED3 = 2.4L 4 Cyl DOHC 16V Dual VVT Engine	DD7 = 5-Speed Manual T355 Transmission DEF = 6-Speed Manual Aisin BG6 Trans DAV = Continuously Variable Transmission DAW = Cont.Var. w/Off-Rd Crawl Ratio Trans

AR = use ase required - = Non illustrrated part

Pump, Assembly Mounting
Figure 19-510

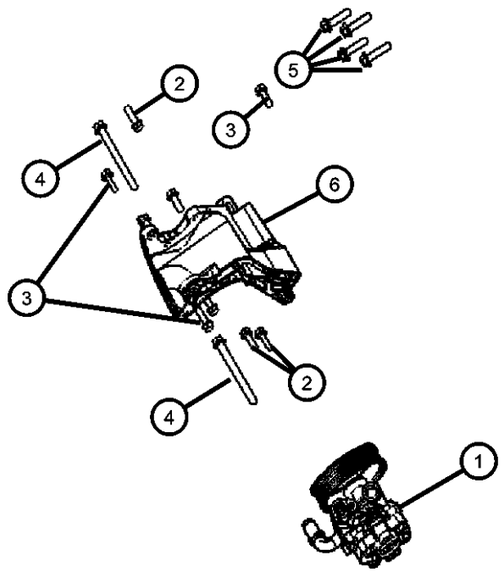

ITEM	PART NUMBER	QTY	LINE	SERIES	BODY	ENGINE	TRANS	TRIM	DESCRIPTION
NOTES: Sales Codes;									
[ED3] = 2.4L 4 CYL DOHC 16V Dual VVT Engine									
1									PUMP, Power Steering
	05105048AB	1	J, T, U			ECN, ED3			Compass
		1	J, T, U			ECN, ED3			Patriot
	05105449AB	1				ECD			
2	06104198AA	2	J, T, U			ED3, ED4			BOLT, Hex Head
3	06104197AA	2				ED3			SCREW
4	06508279AA	2				ED3			BOLT
5	06508246AA	4							BOLT
6	04891593AA	1				ED3			BRACKET, Power Steering Pump

COMPASS/PATRIOT (MK)

SERIES	LINE	BODY	ENGINE	TRANSMISSION
H = HIGHLINE L = LOWLINE P = PREMIUM	J = JEEP - 4WD T = JEEP - 2WD	49 = HATCHBACK TYPE #2 74 = SPORT UTILITY 4-DR TYPE #4	ED3 = 2.4L 4 Cyl DOHC 16V Dual VVT Engine	DD7 = 5-Speed Manual T355 Transmission DEF = 6-Speed Manual Aisin BG6 Trans DAV = Continuously Variable Transmission DAW = Cont.Var. w/Off-Rd Crawl Ratio Trans

AR = use ase required - = Non illustrrated part

Reservoir and Bracket
Figure 19-520

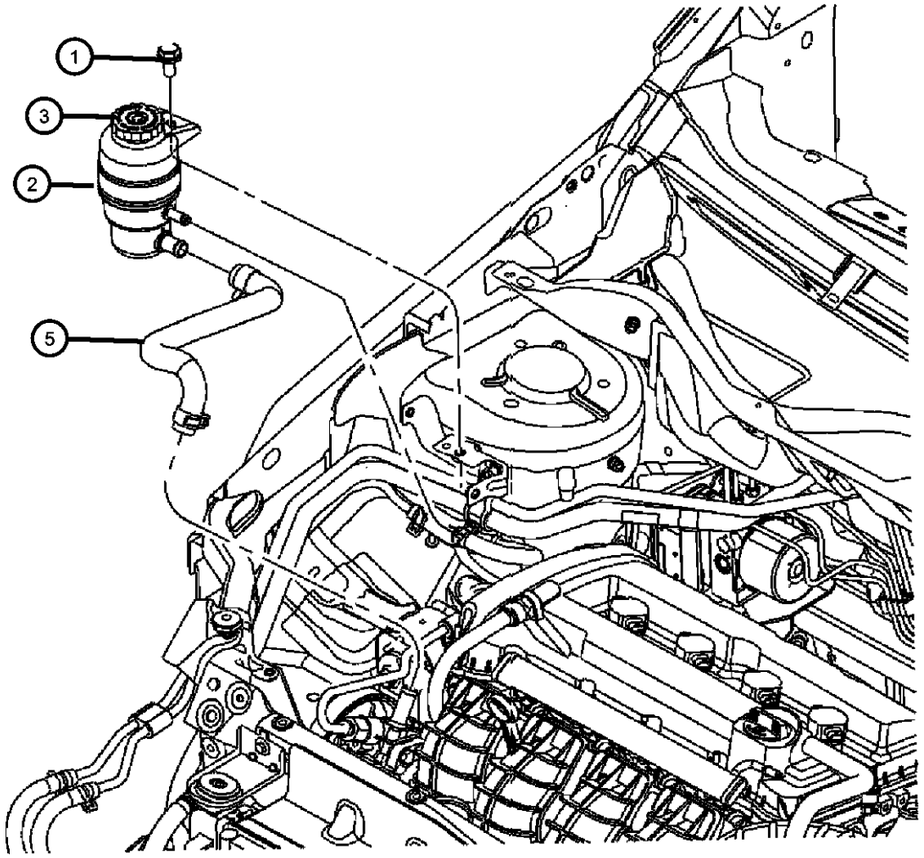

ITEM	PART NUMBER	QTY	LINE	SERIES	BODY	ENGINE	TRANS	TRIM	DESCRIPTION
NOTES: Sales Codes: [ECD] = 2.0L 4 CYL DOHC Diesel 16V Engine [ED3] = 2.4L 4 CYL DOHC 16V Dual VVT Engine									
1	06104386AA	1							SCREW, M8x1.25x25
2	05105338AA	1							RESERVOIR, Power Steering Pump
3	52128513AA	1							CAP, Power Steering Reservoir
-4	05105832AA	1							SHIELD, Power Steering Reservoir
5									HOSE, Power Steering Return
	05105091AC	1	J, T			ECD, ED3			
	05105092AB	1	U			ECD, ED3			

COMPASS/PATRIOT (MK)

SERIES	LINE	BODY	ENGINE	TRANSMISSION
H = HIGHLINE L = LOWLINE P = PREMIUM	J = JEEP - 4WD T = JEEP - 2WD	49 = HATCHBACK TYPE #2 74 = SPORT UTILITY 4-DR TYPE #4	ED3 = 2.4L 4 Cyl DOHC 16V Dual VVT Engine	DD7 = 5-Speed Manual T355 Transmission DEF = 6-Speed Manual Aisin BG6 Trans DAV = Continuously Variable Transmission DAW = Cont.Var. w/Off-Rd Crawl Ratio Trans

Hoses, Power Steering
Figure 19-710

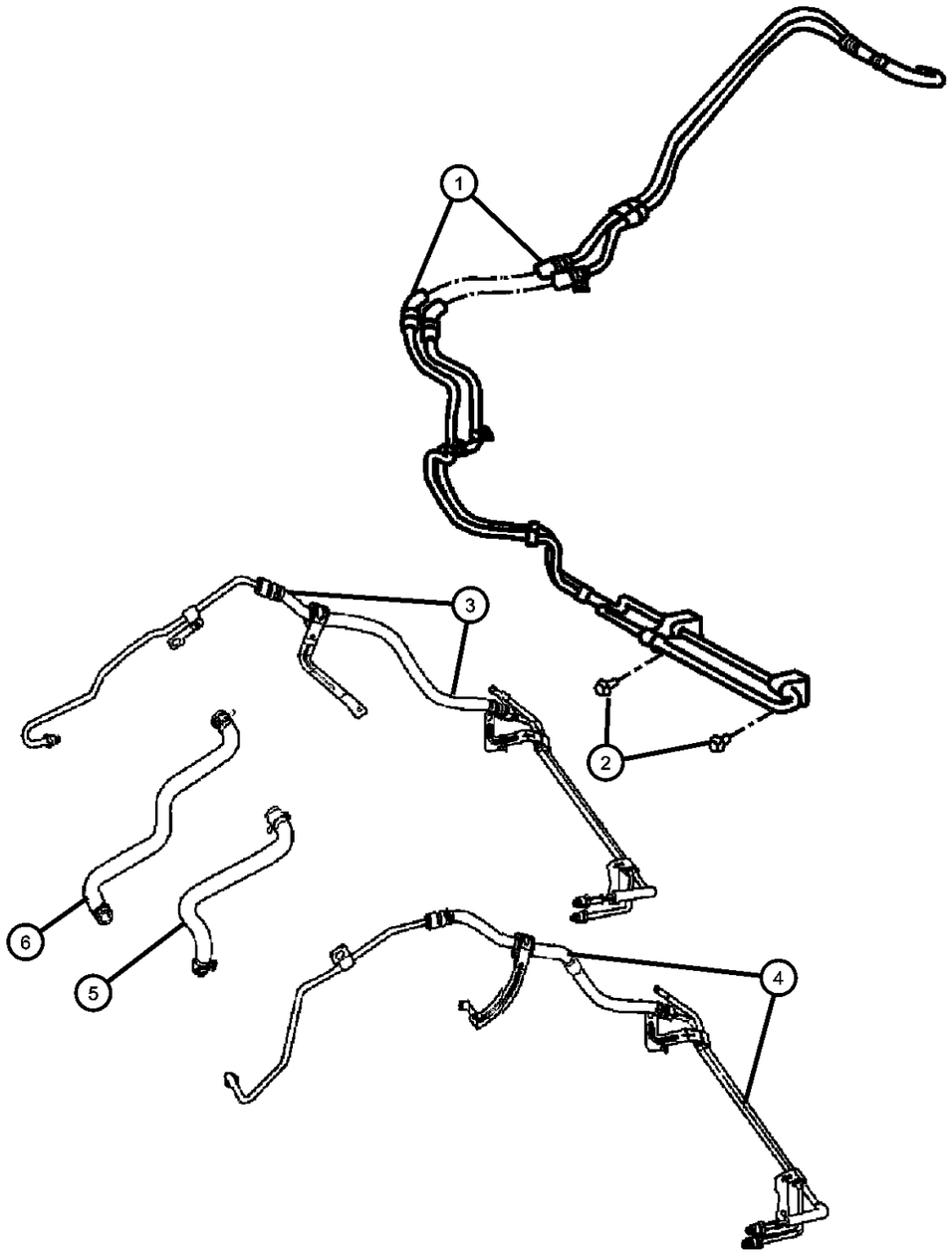

ITEM	PART NUMBER	QTY	LINE	SERIES	BODY	ENGINE	TRANS	TRIM	DESCRIPTION
NOTES: Sales Codes: [EBA] = 1.8L 4 CYL DOHC 16V Dual VVT Engine [ECD] = 2.0L 4 CYL DOHC Diesel 16V Engine [ECN] = 2.0L 4 CYL DOHC 16V Dual VVT Engine [ED3] = 2.4L 4 CYL DOHC 16V Dual VVT Engine									
1									HOSE, Power Steering
	05105789AB	1	J, T, U			ECN, ED3			With Cooler Compass
		1	J, T, U			ECN, ED3			With Cooler Patriot
	05105792AB	1				ECD			With Cooler
2	06105036AA	2							SCREW AND WASHER, Hex Head, M6x1x16
3									HOSE, Power Steering Pressure and Return
	05105087AE	1	J			ED3			
	05105788AC	1	T			ECN, ED3			
4									HOSE, Power Steering Pressure
	05105090AB	1	U			ED3			
	05105446AB	1				ECD			
	05105447AC	1	U			ECD			
5									HOSE, Pump Supply
	05105093AA	1	J, T, U			ECN, ED3			Compass
		1	J, T, U			ECN, ED3			Patriot
6	05105448AB	1				ECD			HOSE, Pump Supply
-7	06030441	1							PIN, Retainer, P/S Return Hose to Side Rail

COMPASS/PATRIOT (MK)

SERIES	LINE	BODY	ENGINE	TRANSMISSION
H = HIGHLINE L = LOWLINE P = PREMIUM	J = JEEP - 4WD T = JEEP - 2WD	49 = HATCHBACK TYPE #2 74 = SPORT UTILITY 4-DR TYPE #4	ED3 = 2.4L 4 Cyl DOHC 16V Dual VVT Engine	DD7 = 5-Speed Manual T355 Transmission DEF = 6-Speed Manual Aisin BG6 Trans DAV = Continuously Variable Transmission DAW = Cont.Var. w/Off-Rd Crawl Ratio Trans

Group - CVT

Constant Variable Transmission

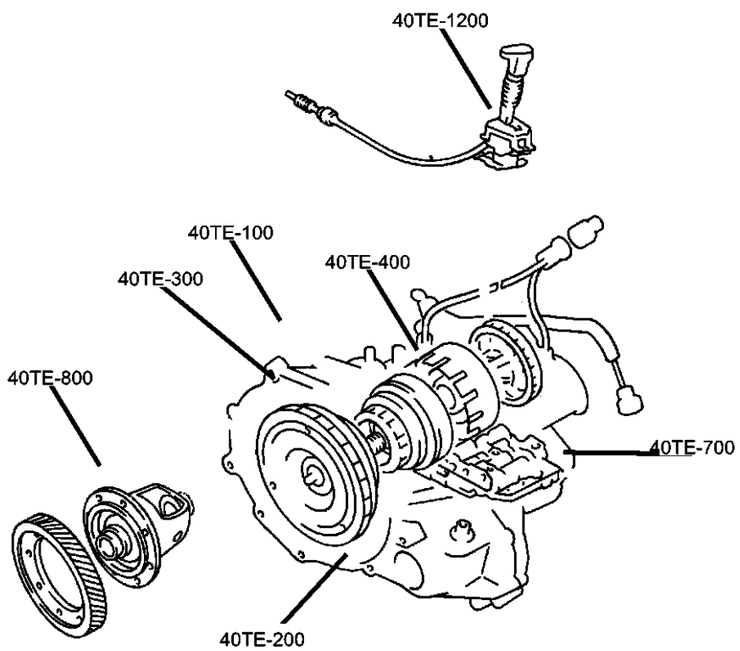

CVT-100 Transaxle Assembly 	**CVT-1200** Gearshift Controls 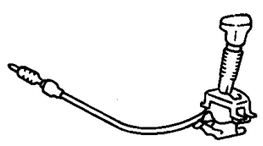		

Group - CVT Constant Variable Transmission

Illustration Title — Group-Fig. No.

Transaxle Assembly

Transaxle Assembly CVT2 ..... Fig. CVT - 110
Transaxle Assembly CVT3 ..... Fig. CVT - 115
Service Parts CVT2 ..... Fig. CVT - 120
Service Parts CVT3 ..... Fig. CVT - 125
Oil Filler Tube CVT2 ..... Fig. CVT - 130
Oil Filler Tube CVT3 ..... Fig. CVT - 135

Gearshift Controls

Gearshift Control ..... Fig. CVT - 1210
Gearshift Knob & Bezel ..... Fig. CVT - 1220
Cable To Transaxle ..... Fig. CVT - 1230

Transaxle Assembly CVT2
Figure CVT-110

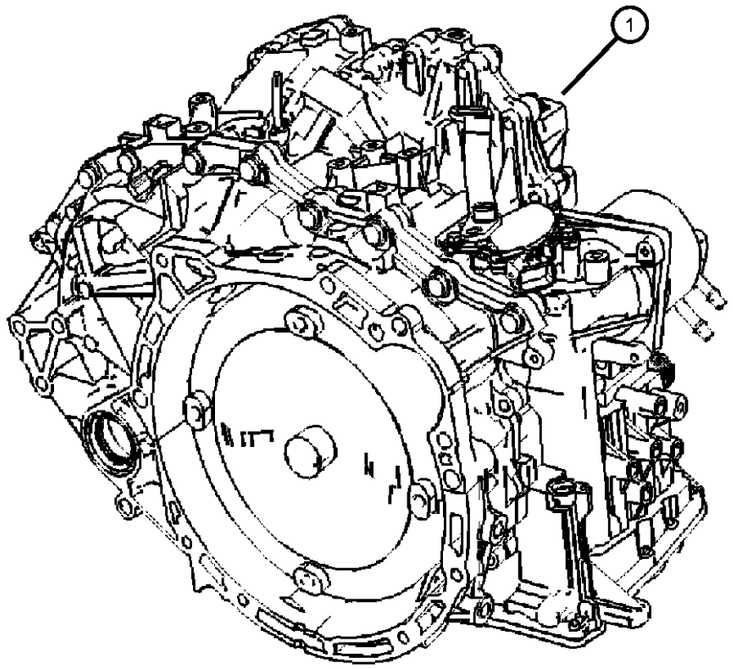

ITEM	PART NUMBER	QTY	LINE	SERIES	BODY	ENGINE	TRANS	TRIM	DESCRIPTION
	NOTE:Internal Parts And Some External Parts Are Not Serviced For The [CVT] Transmission Sales Codes: [DAV]=Continuosly Variable Transmission - [CVT] [ECN]=2.0L DOHC 4 Cyl. 16V VVT Engine [ED3]=2.4L DOHC 4 Cyl. 16V VVT Engine								
1									TRANSAXLE PACKAGE, WITH TORQUE CONVERTER
	68000750AC	1	T			ED3	DAV		
	68004937EA								Mopar CVT+4 Fluid Europe (1-Liter)
	68004942EA								Mopar CVT+4 Fluid Europe (4-Liters)
	05191184AA								Mopar CVT Fluid Quart
	05191185AA								Mopar CVT Fluid Gallon
	68000840AE	1	J, U			ED3	DAV		
	68004937EA								Mopar CVT+4 Fluid Europe (1-Liter)
	68004942EA								Mopar CVT+4 Fluid Europe (4-Liters)
	05191184AA								Mopar CVT Fluid Quart
	05191185AA								Mopar CVT Fluid Gallon
-2	MF140266	4	J, T, U				DAV, DAW		BOLT, Transmission To Engine
-3	MF140269	2					DAV		BOLT, M10x55, Transmission To Engine
-4	MF140264	2	J, T, U				DAV, DAW		BOLT, Transmission To Engine

COMPASS/PATRIOT (MK)

SERIES	LINE	BODY	ENGINE	TRANSMISSION
H = HIGHLINE L = LOWLINE P = PREMIUM	J = JEEP - 4WD T = JEEP - 2WD	49 = HATCHBACK TYPE #2 74 = SPORT UTILITY 4-DR TYPE #4	ED3 = 2.4L 4 Cyl DOHC 16V Dual VVT Engine	DD7 = 5-Speed Manual T355 Transmission DEF = 6-Speed Manual Aisin BG6 Trans DAV = Continuously Variable Transmission DAW = Cont.Var. w/Off-Rd Crawl Ratio Trans

Transaxle Assembly CVT3
Figure CVT-115

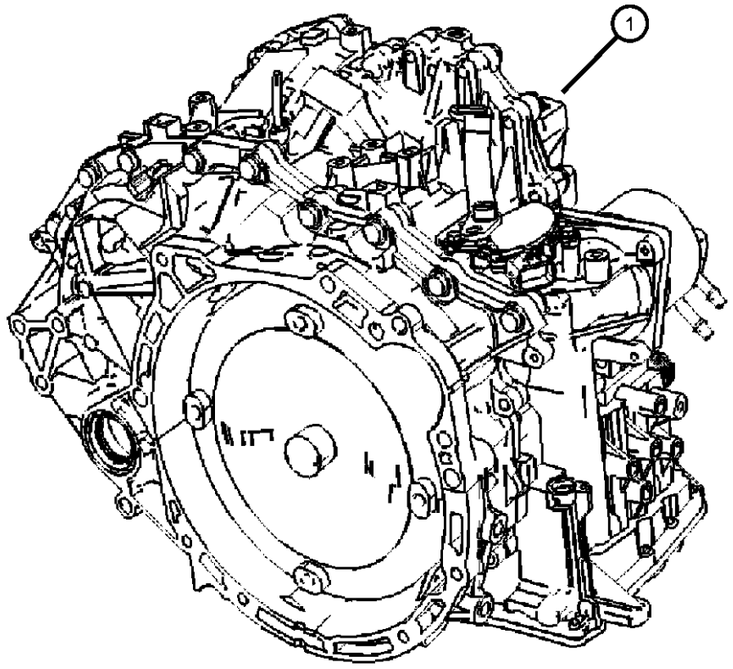

ITEM	PART NUMBER	QTY	LINE	SERIES	BODY	ENGINE	TRANS	TRIM	DESCRIPTION
NOTE:Internal Parts And Some External Parts Are Not Serviced For The [CVT] Transmission Sales Codes: [DAW]=Continuosly Variable Transmission With Off-Road Crawl Ratio [ED3]=2.4L DOHC 4 Cyl. 16V VVT Engine									
1	68010997AA	1	J, T, U			ED3	DAW		TRANSAXLE PACKAGE, WITH TORQUE CONVERTER
-2	MF140266	4	J, T, U				DAV, DAW		BOLT, Hex Flange Head, M10x40
-3	MF140269	2	J, T, U				DAV, DAW		BOLT, M10x55
-4	MF140264	2	J, T, U				DAV, DAW		BOLT, M10x35

COMPASS/PATRIOT (MK)

SERIES	LINE	BODY	ENGINE	TRANSMISSION
H = HIGHLINE L = LOWLINE P = PREMIUM	J = JEEP - 4WD T = JEEP - 2WD	49 = HATCHBACK TYPE #2 74 = SPORT UTILITY 4-DR TYPE #4	ED3 = 2.4L 4 Cyl DOHC 16V Dual VVT Engine	DD7 = 5-Speed Manual T355 Transmission DEF = 6-Speed Manual Aisin BG6 Trans DAV = Continuously Variable Transmission DAW = Cont.Var. w/Off-Rd Crawl Ratio Trans

Service Parts CVT2
Figure CVT-120

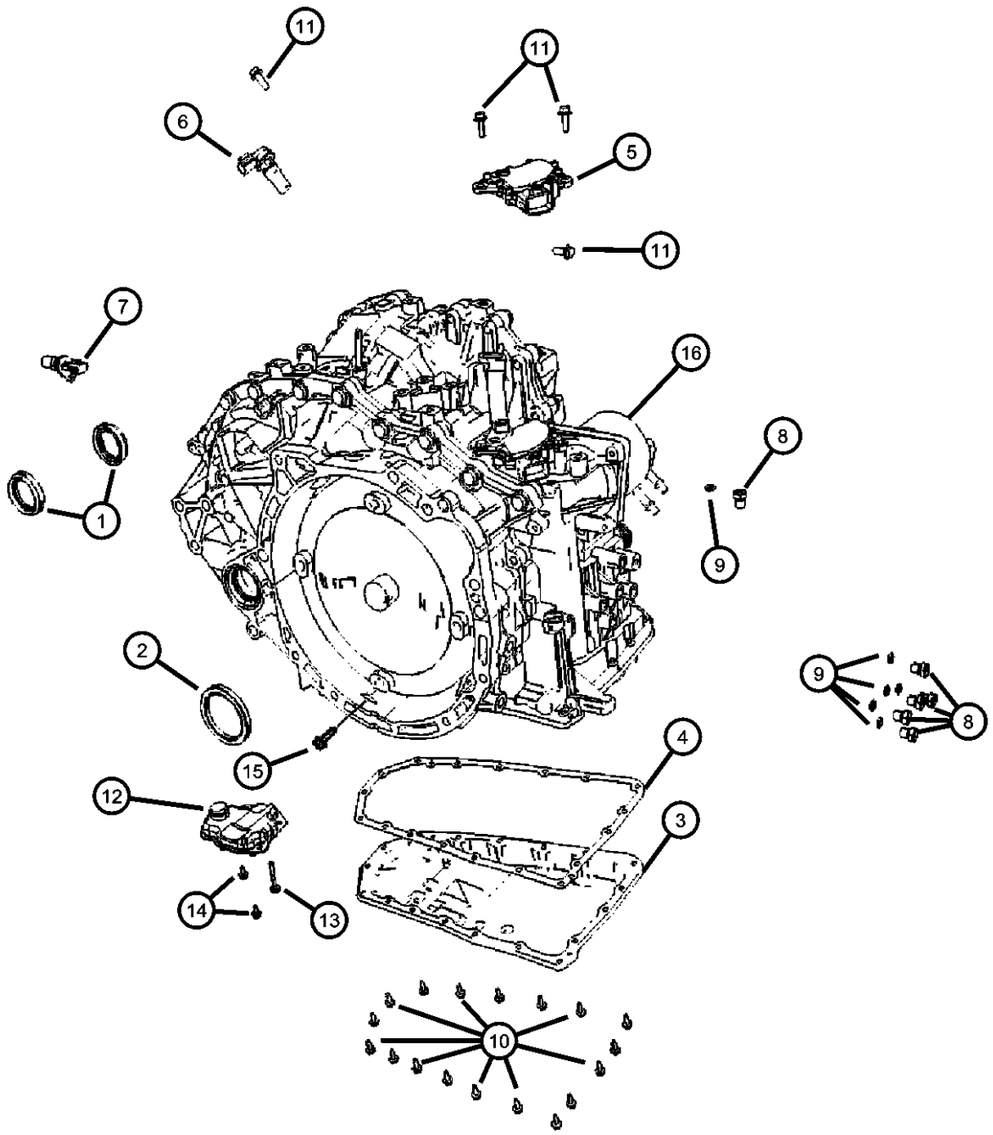

ITEM	PART NUMBER	QTY	LINE	SERIES	BODY	ENGINE	TRANS	TRIM	DESCRIPTION
NOTE:Internal Parts And Some External Parts Are Not Serviced For The [CVT] Transmission Sales Codes: [DAV]=Continuosly Varable Transmission [ECN]=2.0L 4 Cyl. DOHC 16V [VVT] Engine [ED3]=2.4L 4 Cyl. DOHC 16V [VVT] Engine									
1	05189835AA	1				ED3	DAV		SEAL, Halfshaft Seal
2	05189836AA	1				ED3	DAV		SEAL, Torque Converter Hub
3	05189837AA	1				ED3	DAV		PAN, Transmission Oil
	68004937EA								Mopar CVT+4 Fluid Europe (4-Liters)
4	05189838AA	1				ED3	DAV		GASKET, Oil Pan
	68004937EA								Mopar CVT+4 Fluid Europe (4-Liters)
	05191185AA								Mopar CVT Fluid Gallon
	05191184AA								Mopar CVT Fluid Quart
5	05189839AA	1				ED3	DAV		SWITCH, Inhibitor, A/T NEUTRAL, SAFETY, BACK UP
6	05189840AA	1				ED3	DAV		SENSOR, Secondary revolution
7	05189841AA	1				ED3	DAV		SENSOR, Primary revolution
8	05189842AA	6				ED3	DAV		PLUG, Test Port / [M10X1.0X12]
9	05189843AA	6				ED3	DAV		O RING, Plug, Test Plug Oring
10	05189844AA	18				ED3	DAV		BOLT, Oil Pan
11	05189845AA	1				ED3	DAV		BOLT, Inhibitor Switch
12	05191890AA	1				ED3	DAV		FILTER, Transmission Oil
	68004937EA								Mopar CVT+4 Fluid Europe (4-Liters)
	05191184AA								Mopar CVT Fluid Quart
	05191185AA								Mopar CVT Fluid Gallon
13	05191892AA	1				ED3	DAV		BOLT, Oil Strainer
14	05191891AA	2				ED3	DAV		BOLT, Oil Strainer
15									BOLT, M10x11
	MD713228	4	J, U			ED3	DAV		Flexplate to Torque Converter
		4	T			ED3	DAV		Flexplate to Torque Converter
16									COOLER, Transmission Oil
	68025160AA	1	J, U			ED3	DAV		
		1	T			ED3	DAV		

COMPASS/PATRIOT (MK)

SERIES	LINE	BODY	ENGINE	TRANSMISSION
H = HIGHLINE L = LOWLINE P = PREMIUM	J = JEEP - 4WD T = JEEP - 2WD	49 = HATCHBACK TYPE #2 74 = SPORT UTILITY 4-DR TYPE #4	ED3 = 2.4L 4 Cyl DOHC 16V Dual VVT Engine	DD7 = 5-Speed Manual T355 Transmission DEF = 6-Speed Manual Aisin BG6 Trans DAV = Continuously Variable Transmission DAW = Cont.Var. w/Off-Rd Crawl Ratio Trans

AR = use ase required - = Non illustrrated part

Service Parts CVT3
Figure CVT-125

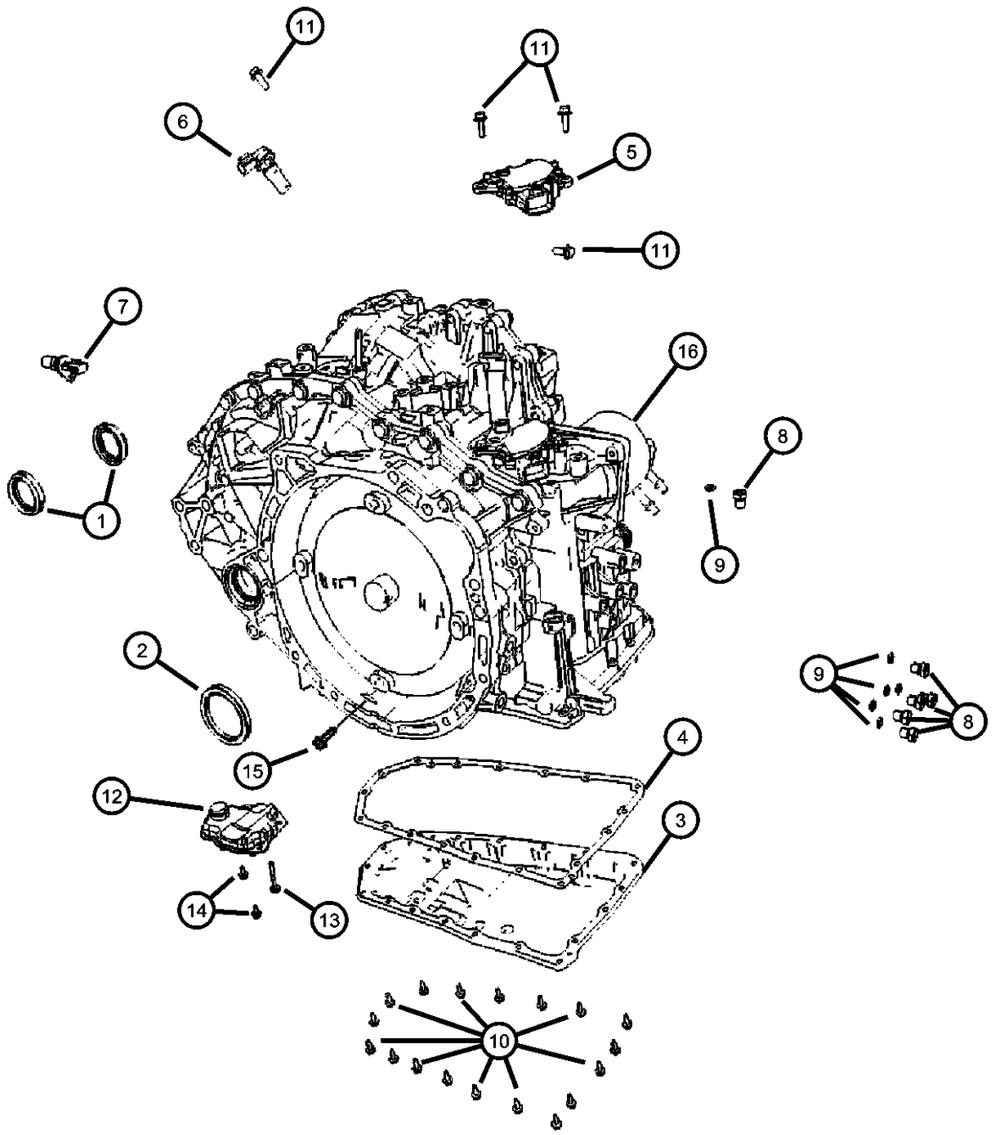

ITEM	PART NUMBER	QTY	LINE	SERIES	BODY	ENGINE	TRANS	TRIM	DESCRIPTION
NOTE:Internal Parts And Some External Parts Are Not Serviced For The [CVT] Transmission Sales Codes: [DAW]=Continuosly Variable Transmission With Off-Road Crawl Ratio [ED3]=2.4L 4 Cyl. DOHC 16V [VVT] Engine									
1	05189835AA	1	J, T, U			ED3	DAW		SEAL, Halfshaft Seal, Right & Left
2	05189836AA	1	J, T, U			ED3	DAW		SEAL, Torque Converter Hub
3	05189837AA	1	J, T, U			ED3	DAW		PAN, Transmission Oil
	68004937EA								Mopar CVT+4 Fluid Europe (4-Liters)
4	05189838AA	1	J, T, U			ED3	DAW		GASKET, Oil Pan
	68004937EA								Mopar CVT+4 Fluid Europe (4-Liters)
	05191185AA								Mopar CVT Fluid Gallon
	05191184AA								Mopar CVT Fluid Quart
5	05189839AA	1	J, T, U			ED3	DAW		SWITCH, Inhibitor, A/T NEUTRAL, SAFETY, BACK UP
6	05189840AA	1	J, T, U			ED3	DAW		SENSOR, Secondary revolution
7	05189841AA	1	J, T, U			ED3	DAW		SENSOR, Primary revolution
8	05189842AA	6	J, T, U			ED3	DAW		PLUG, Test Port / [M10X1.0X12]
9	05189843AA	6	J, T, U			ED3	DAW		O RING, Plug, Test Plug Oring
10	05189844AA	18	J, T, U			ED3	DAW		BOLT, Oil Pan
11	05189845AA	1	J, T, U			ED3	DAW		BOLT, Inhibitor Switch
12	05191890AA	1	J, T, U			ED3	DAW		FILTER, Transmission Oil
	68004937EA								Mopar CVT+4 Fluid Europe (4-Liters)
	05191184AA								Mopar CVT Fluid Quart
	05191185AA								Mopar CVT Fluid Gallon
13	05191892AA	1	J, T, U			ED3	DAW		BOLT, Oil Strainer
14	05191891AA	2	J, T, U			ED3	DAW		BOLT, Oil Strainer
15	MD713228	4	J, T, U			ED3	DAW		BOLT, M10x11, Flexplate To Torque Converter
16	68004297AA	1	J, T, U			ECN, ED3	DAW		COOLER, Transmission Oil

COMPASS/PATRIOT (MK)

SERIES	LINE	BODY	ENGINE	TRANSMISSION
H = HIGHLINE L = LOWLINE P = PREMIUM	J = JEEP - 4WD T = JEEP - 2WD	49 = HATCHBACK TYPE #2 74 = SPORT UTILITY 4-DR TYPE #4	ED3 = 2.4L 4 Cyl DOHC 16V Dual VVT Engine	DD7 = 5-Speed Manual T355 Transmission DEF = 6-Speed Manual Aisin BG6 Trans DAV = Continuously Variable Transmission DAW = Cont.Var. w/Off-Rd Crawl Ratio Trans

AR = use ase required - = Non illustrrated part

Oil Filler Tube CVT2
Figure CVT-130

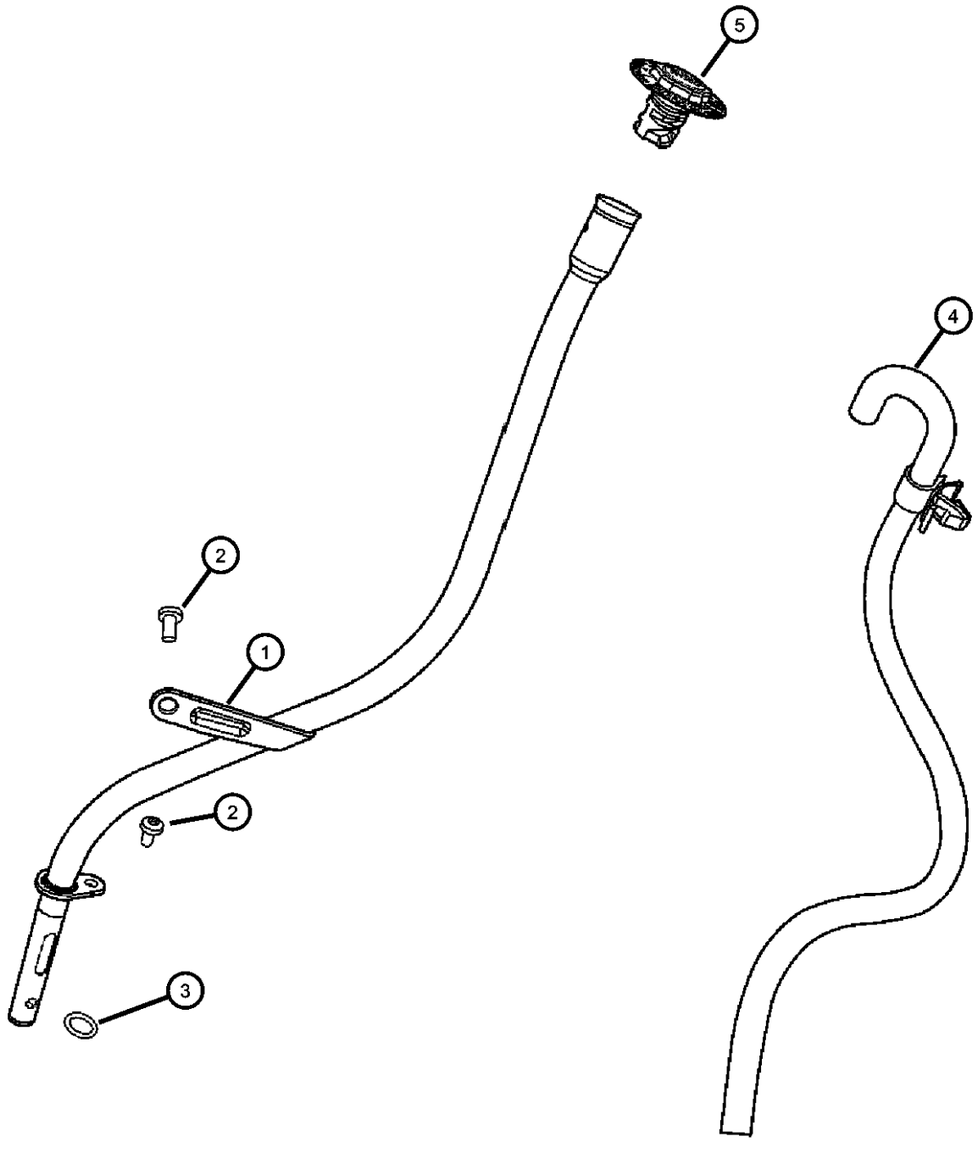

ITEM	PART NUMBER	QTY	LINE	SERIES	BODY	ENGINE	TRANS	TRIM	DESCRIPTION

NOTE:Internal Parts And Some External Parts Are Not Serviced For The [CVT] Transmission
Sales Codes:
[DAV]=Continuosly Variable Transmission - [CVT]

1	05273372AC	1					DAV		TUBE, Transmission Oil Filler
2	06104141AA	2					DAV		SCREW, Filler Tube To Transaxle
3	06030608	1					DAV		SEAL, Oil Filler Tube
4	05273459AA	1					DAV		VENT, Transmission
5	05105718AC	1	J, T, U				DAV, DAW		CAP, Oil Filler

COMPASS/PATRIOT (MK)

SERIES	LINE	BODY	ENGINE	TRANSMISSION
H = HIGHLINE L = LOWLINE P = PREMIUM	J = JEEP - 4WD T = JEEP - 2WD	49 = HATCHBACK TYPE #2 74 = SPORT UTILITY 4-DR TYPE #4	ED3 = 2.4L 4 Cyl DOHC 16V Dual VVT Engine	DD7 = 5-Speed Manual T355 Transmission DEF = 6-Speed Manual Aisin BG6 Trans DAV = Continuously Variable Transmission DAW = Cont.Var. w/Off-Rd Crawl Ratio Trans

Oil Filler Tube CVT3
Figure CVT-135

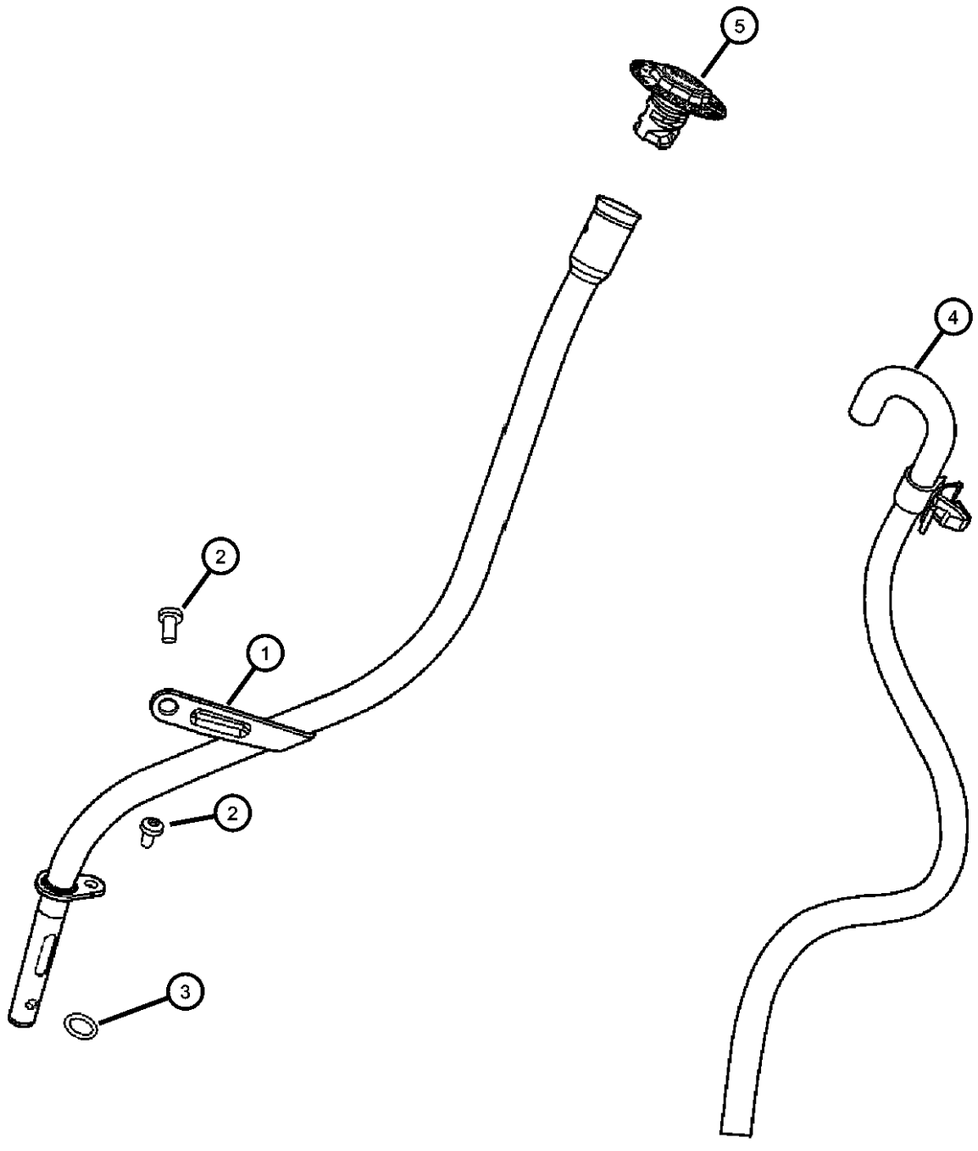

ITEM	PART NUMBER	QTY	LINE	SERIES	BODY	ENGINE	TRANS	TRIM	DESCRIPTION

NOTE:Internal Parts And Some External Parts Are Not Serviced For The [CVT] Transmission
Sales Codes:
[DAW]=Continuosly Variable Transmission With Off-Road Crawl Ratio

1	05273372AE	1	J, T, U				DAV, DAW		TUBE, Transmission Oil Filler
2	06104141AA	2							SCREW
3	06030608	1	J, T, U				DAV, DAW		SEAL, Oil Filler Tube
4	05273459AA	1					DAV, DAW		VENT, Transmission
5	05105718AC	1	J, T, U				DAV, DAW		CAP, Oil Filler

COMPASS/PATRIOT (MK)

SERIES	LINE	BODY	ENGINE	TRANSMISSION
H = HIGHLINE L = LOWLINE P = PREMIUM	J = JEEP - 4WD T = JEEP - 2WD	49 = HATCHBACK TYPE #2 74 = SPORT UTILITY 4-DR TYPE #4	ED3 = 2.4L 4 Cyl DOHC 16V Dual VVT Engine	DD7 = 5-Speed Manual T355 Transmission DEF = 6-Speed Manual Aisin BG6 Trans DAV = Continuously Variable Transmission DAW = Cont.Var. w/Off-Rd Crawl Ratio Trans

AR = use ase required - = Non illustrrated part

Gearshift Control
Figure CVT-1210

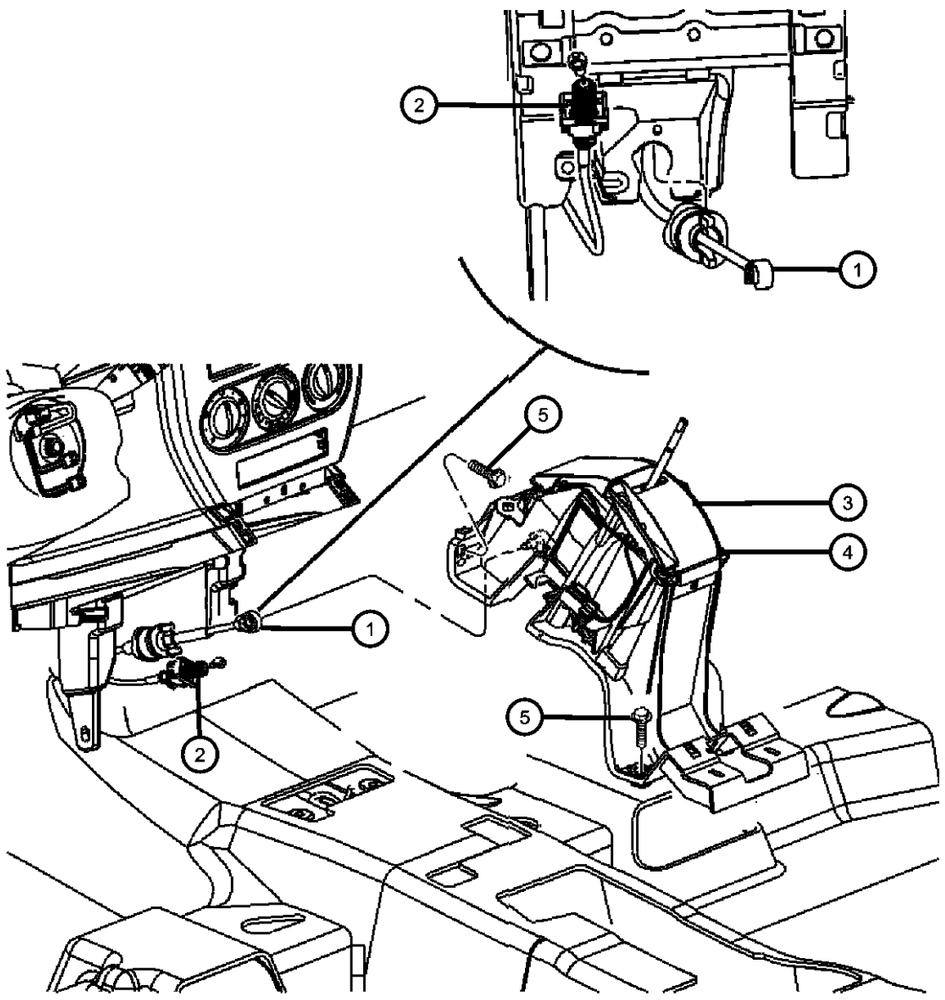

ITEM	PART NUMBER	QTY	LINE	SERIES	BODY	ENGINE	TRANS	TRIM	DESCRIPTION

NOTE:Internal Parts And Some External Parts Are Not Serviced For The [CVT] Transmission
Sales Codes:
[DHD]=Auto Stick Transmission
[DAV]=Continuosly Variable Transmission
[DAW]=Continuosly Variable Transmission With Off-Road Crawl Ratio

1	05273433AD	1					DAV, DAW		CABLE, Gear Selector
2									CABLE, Gear Selector
	05273294AD	1	J, T				DAV, DAW		Left Hand Drive
	05273375AD	1	U				DAV, DAW		Right Hand Drive
3	05273374AC	1					DAV, DAW		SHIFTER, Transmission gear, Autostick, With [DHD]
4	05273388AC	1					DAV, DAW		SHIFTER, Transmission, Without [DHD]
5	06105099AA	4	J, T, U						SCREW

COMPASS/PATRIOT (MK)

SERIES	LINE	BODY	ENGINE	TRANSMISSION
H = HIGHLINE L = LOWLINE P = PREMIUM	J = JEEP - 4WD T = JEEP - 2WD	49 = HATCHBACK TYPE #2 74 = SPORT UTILITY 4-DR TYPE #4	ED3 = 2.4L 4 Cyl DOHC 16V Dual VVT Engine	DD7 = 5-Speed Manual T355 Transmission DEF = 6-Speed Manual Aisin BG6 Trans DAV = Continuously Variable Transmission DAW = Cont.Var. w/Off-Rd Crawl Ratio Trans

Gearshift Knob & Bezel
Figure CVT-1220

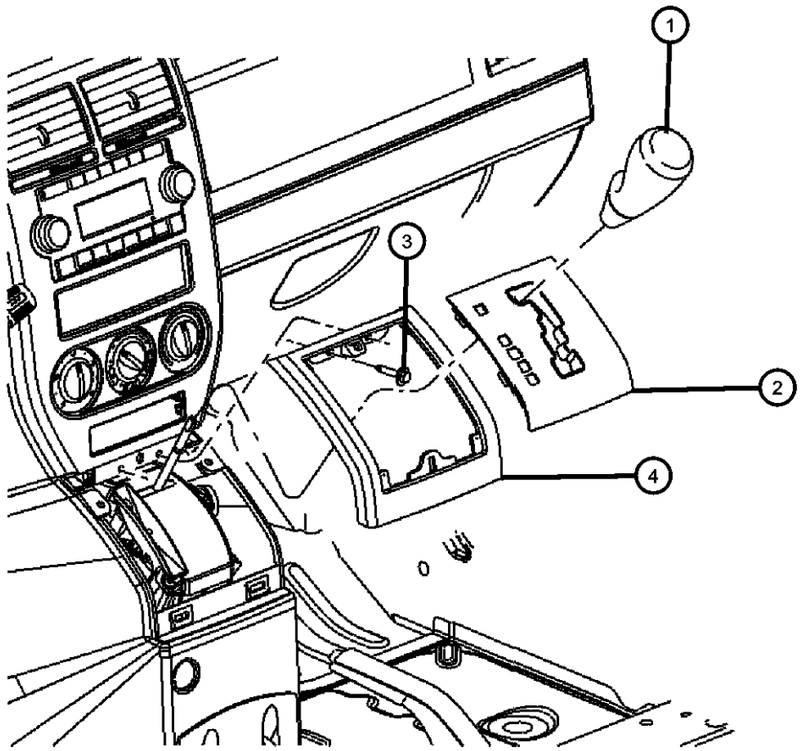

ITEM	PART NUMBER	QTY	LINE	SERIES	BODY	ENGINE	TRANS	TRIM	DESCRIPTION
NOTE:									
Sales Codes:									
[DHD]=Auto Stick Transmission									
1	05273590AB	1					DAV, DAW		KNOB, Gearshift
2									BEZEL, Console PRNDL
	0ZH70DX9AA	1					DAV		With [DHD]
	1AW70DX9AA	1	J, T, U				DAV, DAW		Without [DHD]
3	06105099AA	2	J, T, U						SCREW
4	0YZ99DSFAA	1	J, T, U						BEZEL, Console Shifter

COMPASS/PATRIOT (MK)

SERIES	LINE	BODY	ENGINE	TRANSMISSION
H = HIGHLINE L = LOWLINE P = PREMIUM	J = JEEP - 4WD T = JEEP - 2WD	49 = HATCHBACK TYPE #2 74 = SPORT UTILITY 4-DR TYPE #4	ED3 = 2.4L 4 Cyl DOHC 16V Dual VVT Engine	DD7 = 5-Speed Manual T355 Transmission DEF = 6-Speed Manual Aisin BG6 Trans DAV = Continuously Variable Transmission DAW = Cont.Var. w/Off-Rd Crawl Ratio Trans

Cable To Transaxle
Figure CVT-1230

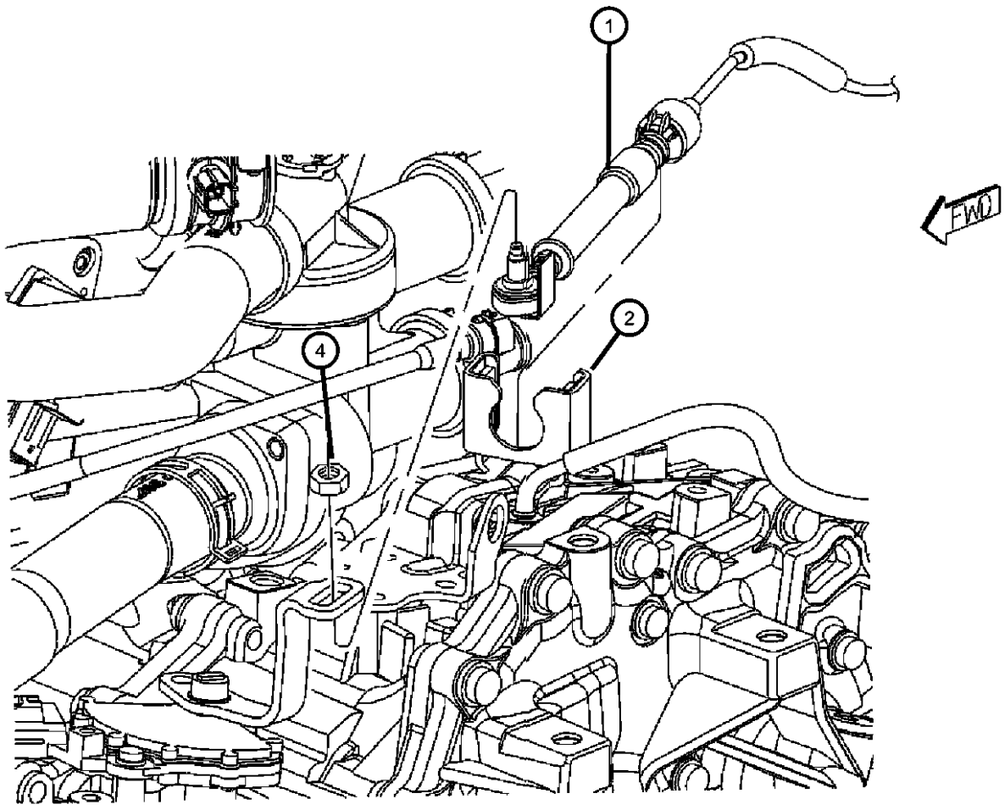

ITEM	PART NUMBER	QTY	LINE	SERIES	BODY	ENGINE	TRANS	TRIM	DESCRIPTION

NOTE:
Sales Codes:
[DAV]=Continuosly Variable Transmission
[DAW]=Continuosly Variable Transmission With Off-Road Crawl Ratio

1	05273433AD	1		DAV, DAW	CABLE, Gear Selector
2	05273363AC	1		DAV	BRACKET, Shift Cable
-3	06104197AA	2		DAV	SCREW, Shift Cable To Bracket
4	06104709AA	1		DAV	NUT, M8, Shift Cable To Shift Lever

COMPASS/PATRIOT (MK)

SERIES	LINE	BODY	ENGINE	TRANSMISSION
H = HIGHLINE L = LOWLINE P = PREMIUM	J = JEEP - 4WD T = JEEP - 2WD	49 = HATCHBACK TYPE #2 74 = SPORT UTILITY 4-DR TYPE #4	ED3 = 2.4L 4 Cyl DOHC 16V Dual VVT Engine	DD7 = 5-Speed Manual T355 Transmission DEF = 6-Speed Manual Aisin BG6 Trans DAV = Continuously Variable Transmission DAW = Cont.Var. w/Off-Rd Crawl Ratio Trans

Group - BG6

Aisin Manual Transaxle 6 Speed

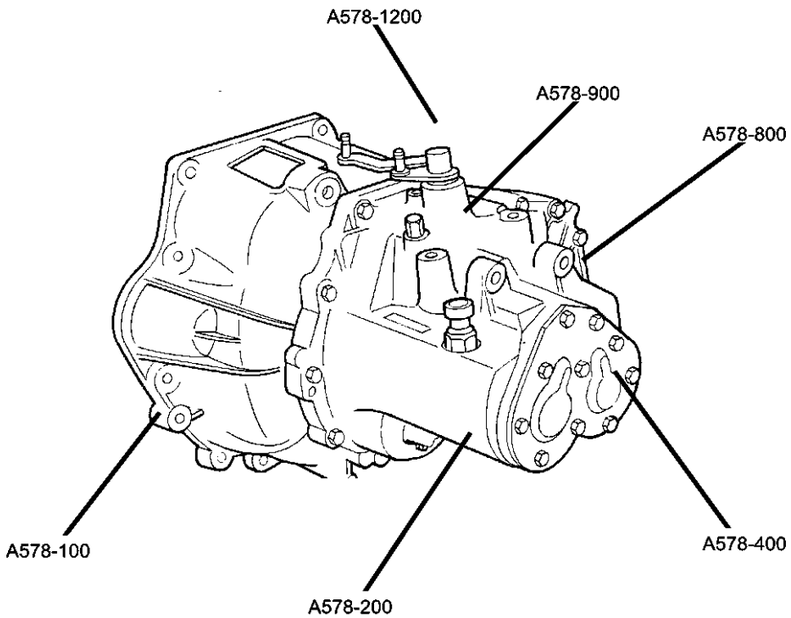

BG6-100 Transaxle Assembly 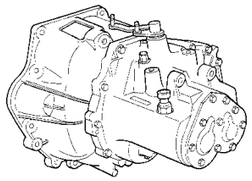	**BG6-1200** Gearshift Controls 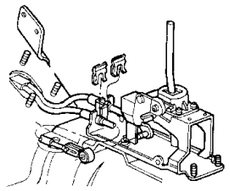	**BG6-200** Case and Extension 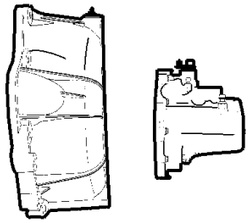	**BG6-400** Gear Train 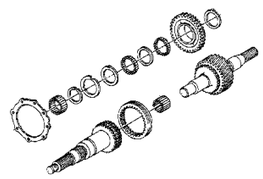
BG6-800 Differential 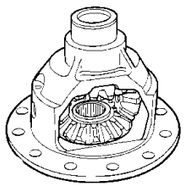	**BG6-900** Fork and Rails 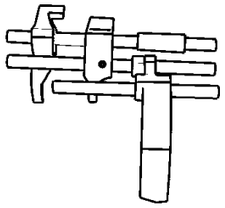		

Group - BG6 Aisin Manual Transaxle 6 Speed

Illustration Title — Group-Fig. No.

Transaxle Assembly
Transaxle Assembly ..... Fig. BG6 - 110

Case and Extension
Transaxle Case & Related Parts ..... Fig. BG6 - 210

Gear Train
Input Shaft ..... Fig. BG6 - 410
Output Shaft / [NO.1] ..... Fig. BG6 - 420
Output Shaft / [NO.2] ..... Fig. BG6 - 430
Reverse Idler Gear ..... Fig. BG6 - 440

Differential
Differential ..... Fig. BG6 - 810

Fork and Rails
Fork & Rails ..... Fig. BG6 - 910

Gearshift Controls
Gearshift Control ..... Fig. BG6 - 1210
Shift Knob & Bezel ..... Fig. BG6 - 1220
Cable To Transaxle ..... Fig. BG6 - 1230

Transaxle Assembly
Figure BG6-110

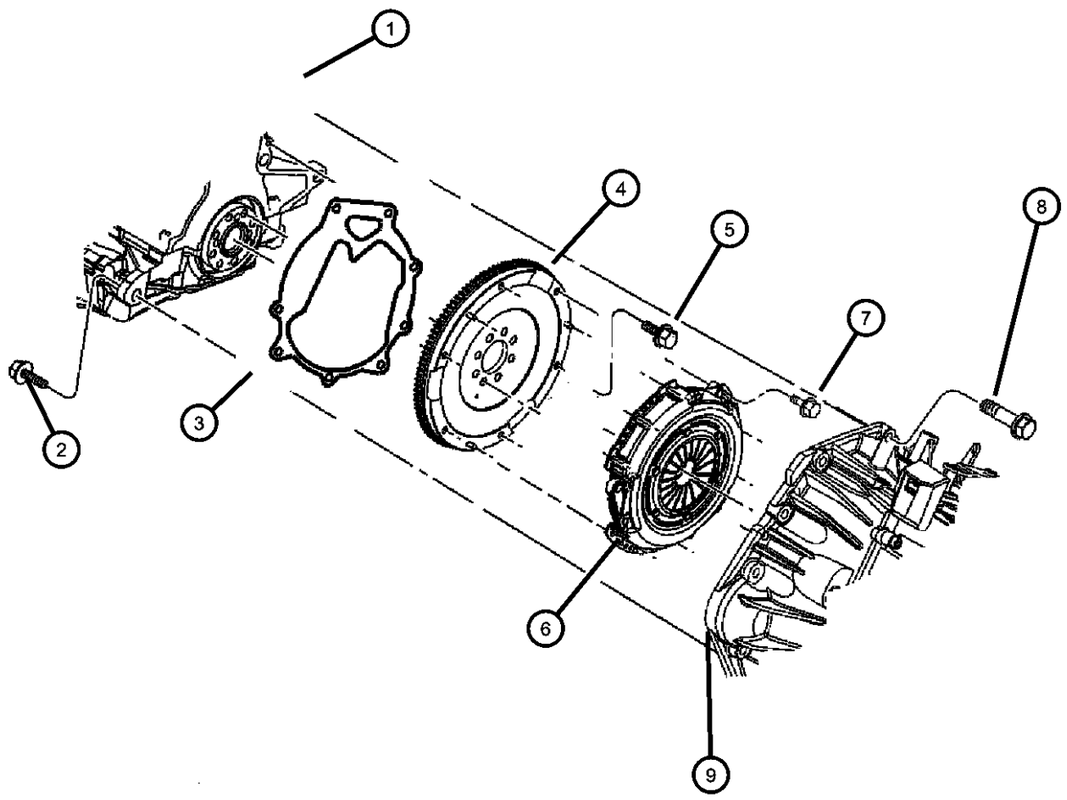

ITEM	PART NUMBER	QTY	LINE	SERIES	BODY	ENGINE	TRANS	TRIM	DESCRIPTION
NOTE:									
Sales Codes:									
[DEF]=6 Speed Manual Transaxle - [Asin / BG6]									
1	06104709AA	1							ENGINE, Complete, See Engine Group, (NOT SERVICED)
2	06506021AA	3				ECD	DEF		SCREW, Hex Flange Head, M12X1.75X110.00
3	04891665AA	1				ECD			COVER, Transmission Case
4	05106019AA	1	J, T, U			ECD	DEF		FLYWHEEL
5	06508456AA	6				ECD	DEF		BOLT, Lock Patch
6	05106018AA	1				ECD	DEF		PLATE, Clutch Pressure, Includes: Preassure Plate & Clutch Disc
7	06508455AA	6				ECD	DEF		BOLT
8	06102018	5				ECD	DEF		BOLT, Hex Flange Head, M12x1.75x65
9	05273278AC	1	J, U			ECD	DEF		TRANSMISSION, 6 speed

COMPASS/PATRIOT (MK)

SERIES	LINE	BODY	ENGINE	TRANSMISSION
H = HIGHLINE	J = JEEP - 4WD	49 = HATCHBACK TYPE #2	ED3 = 2.4L 4 Cyl DOHC 16V Dual VVT Engine	DD7 = 5-Speed Manual T355 Transmission
L = LOWLINE	T = JEEP - 2WD	74 = SPORT UTILITY 4-DR TYPE #4		DEF = 6-Speed Manual Aisin BG6 Trans
P = PREMIUM				DAV = Continuously Variable Transmission
				DAW = Cont.Var. w/Off-Rd Crawl Ratio Trans

Transaxle Case & Related Parts
Figure BG6-210

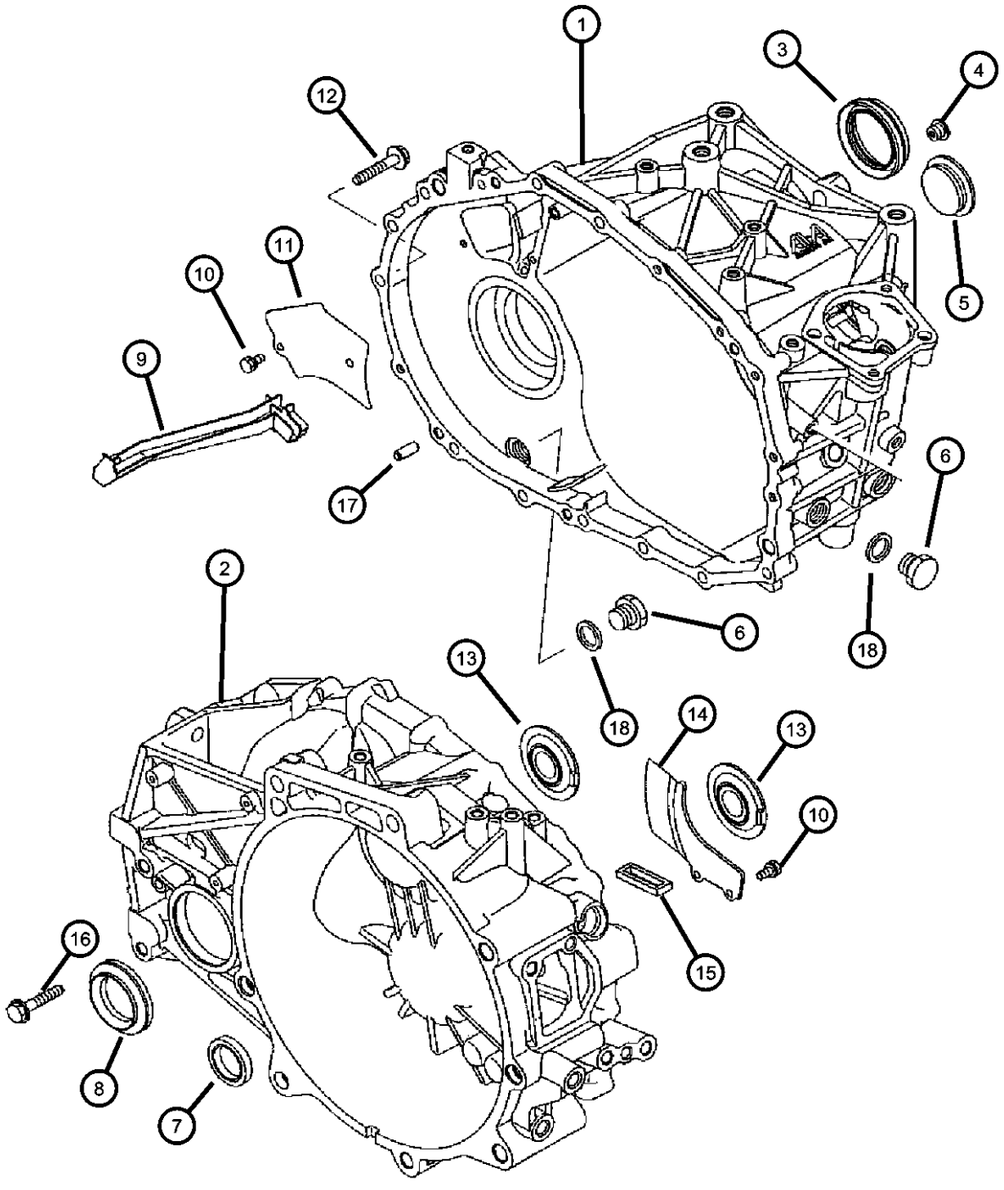

ITEM	PART NUMBER	QTY	LINE	SERIES	BODY	ENGINE	TRANS	TRIM	DESCRIPTION
NOTE:									
Sales Codes:									
[DEF]=6 Speed Manual Transmission - [AISIN / BG6]									
[ECD]=2.0L 4 Cyl. DOHC 16V Turbo Diesel Engine									
1	05273278AC	1							CASE, Transmission sub assembly, (NOT SERVICED)
2	05273278AC	1							CASE, Transaxle sub assembly, (NOT SERVICED)
3	05191357AA	1	U, J			ECD	DEF		SEAL, TransmissionLeft
4	05191360AA	5	J, U			ECD	DEF		PLUG
5	05191361AA	1	J, U			ECD	DEF		PLUG
6	05191362AA	1	J, U			ECD	DEF		PLUG
7	05191358AA	1	J, U			ECD	DEF		SEAL, Transmission, Input Shaft
8	05191358AA	1	J, U			ECD	DEF		SEAL, TransmissionRight
9	05191047AA	1	J, U			ECD	DEF		PIPE, Oil Receiver
10	05191065AA	4	J, U			ECD	DEF		BOLT AND WASHER
11	05191051AA	1	J, U			ECD	DEF		SEPERATOR, Oil
12	05191056AA	18	J, U			ECD	DEF		BOLT, BOLT-FLANGE
13	05191049AA	2	J, U			ECD	DEF		COVER, Output Shaft
14	05191050AA	1	J, U			ECD	DEF		SEPERATOR, Oil
15	05191053AA	1	J, U			ECD	DEF		MAGNET, Transmission
16	05191056AA	18	J, U			ECD	DEF		BOLT, BOLT-FLANGE
17	05191066AA	4	J, U			ECD	DEF		PIN
18	05191062AA	1	J, U			ECD	DEF		GASKET, Transmission Case

COMPASS/PATRIOT (MK)

SERIES	LINE	BODY	ENGINE	TRANSMISSION
H = HIGHLINE L = LOWLINE P = PREMIUM	J = JEEP - 4WD T = JEEP - 2WD	49 = HATCHBACK TYPE #2 74 = SPORT UTILITY 4-DR TYPE #4	ED3 = 2.4L 4 Cyl DOHC 16V Dual VVT Engine	DD7 = 5-Speed Manual T355 Transmission DEF = 6-Speed Manual Aisin BG6 Trans DAV = Continuously Variable Transmission DAW = Cont.Var. w/Off-Rd Crawl Ratio Trans

Input Shaft
Figure BG6-410

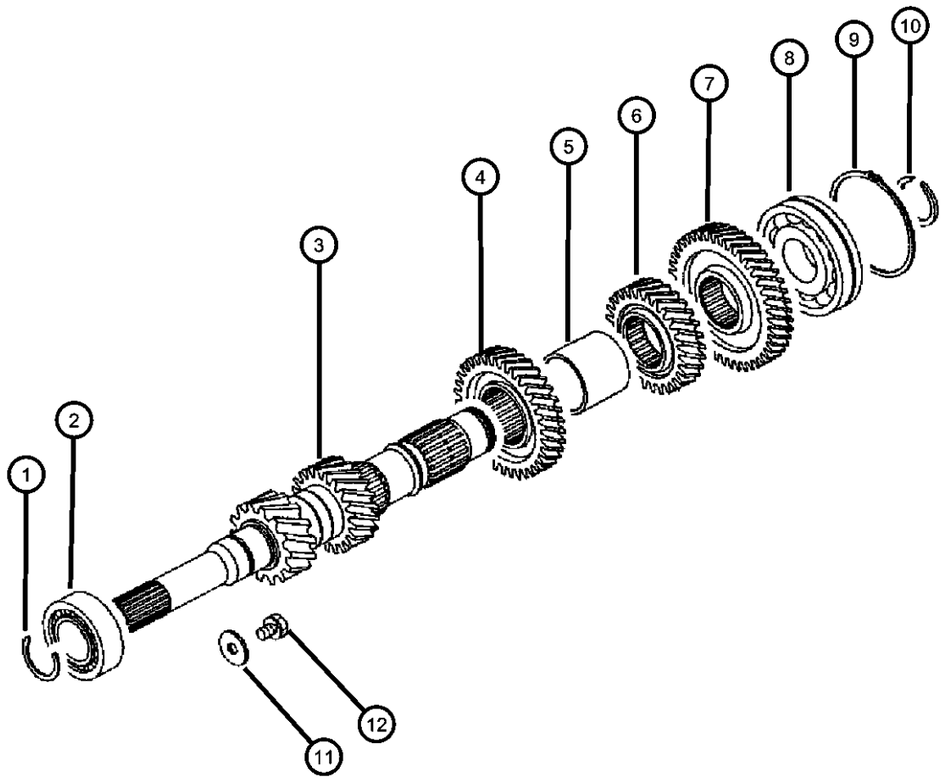

ITEM	PART NUMBER	QTY	LINE	SERIES	BODY	ENGINE	TRANS	TRIM	DESCRIPTION
NOTE:									
Sales Codes:									
[DEF]=6 Speed									
1	05191692AA	1	J, U			ECD	DEF		RING, Snap
2	05191428AA	1	J, U			ECD	DEF		BEARING, Roller
3	05191182AA	1	J, U			ECD	DEF		INPUT SHAFT, Transmission
4	05191131AA	1	J, U			ECD	DEF		GEAR, Fourth
5	05191694AA	1	J, U			ECD	DEF		SPACER, Gear
6	05191130AA	1	J, U			ECD	DEF		GEAR, Third
7	05191132AA	1	J, U			ECD	DEF		GEAR, Sixth
8	05191412AA	1	J, U			ECD	DEF		BEARING, Ball
9	05191063AA	1	J, U			ECD	DEF		SNAP RING
10	05191675AA	1	J, U			ECD	DEF		SNAP RING PACKAGE, Transmission
11	05191052AA	2	J, U			ECD	DEF		PLATE, Transaxle Case Rear
12	68000007AA	2	J, U			ECD	DEF		BOLT AND WASHER

COMPASS/PATRIOT (MK)

SERIES	LINE	BODY	ENGINE	TRANSMISSION
H = HIGHLINE L = LOWLINE P = PREMIUM	J = JEEP - 4WD T = JEEP - 2WD	49 = HATCHBACK TYPE #2 74 = SPORT UTILITY 4-DR TYPE #4	ED3 = 2.4L 4 Cyl DOHC 16V Dual VVT Engine	DD7 = 5-Speed Manual T355 Transmission DEF = 6-Speed Manual Aisin BG6 Trans DAV = Continuously Variable Transmission DAW = Cont.Var. w/Off-Rd Crawl Ratio Trans

AR = use ase required - = Non illustrrated part

Output Shaft / [NO.1]
Figure BG6-420

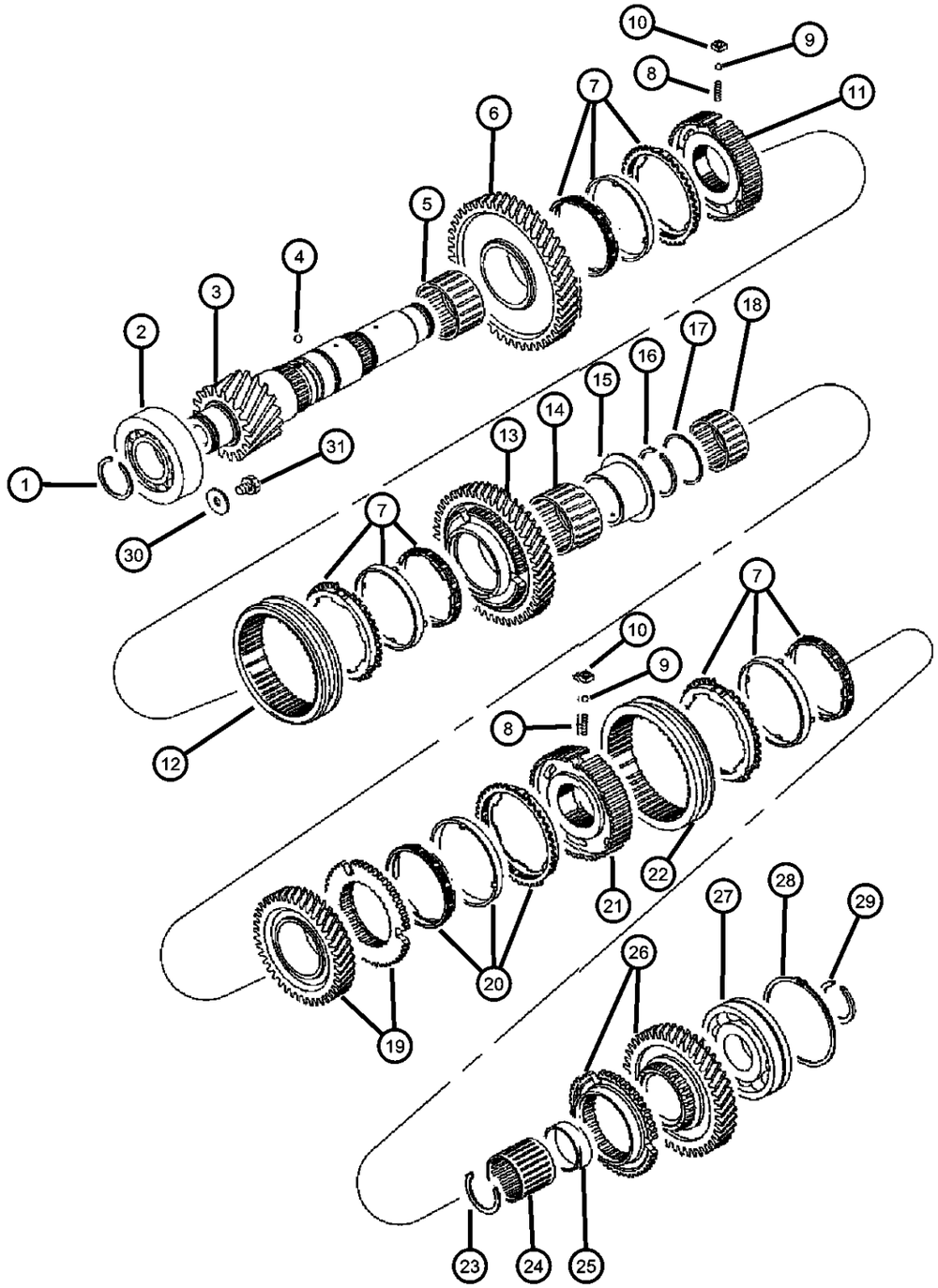

ITEM	PART NUMBER	QTY	LINE	SERIES	BODY	ENGINE	TRANS	TRIM	DESCRIPTION
NOTE: Sales Codes: [DEF]=6 Speed Manual Transmission - [AISIN / BG6] [ECD]=2.0L 4 Cyl. DOHC 16V Turbo Diesel Engine									
1	05191692AA	1	J, U			ECD	DEF		RING, Snap
2	05191432AA	1	J, U			ECD	DEF		BEARING, Roller
3	05191681AA	1	J, U			ECD	DEF		SHAFT, Output
4	05191698AA	2	J, U			ECD	DEF		BALL
5	05191417AA	2	J, U			ECD	DEF		BEARING, Needle
6	05191683AA	1	J, U			ECD	DEF		GEAR, First
7	68000008AA	3	J, U			ECD	DEF		SYNCHRONIZER, Ring set, no. 1, 2, 3 gear
8	05191708AA	9	J, U			ECD	DEF		SPRING, Synchronizer
9	05191714AA	9	J, U			ECD	DEF		BALL
10	05191707AA	9	J, U			ECD	DEF		KEY, Synchronizer
11	05191703AA	1	J, U			ECD	DEF		HUB, Synchronizer
12	05191705AA	1	J, U			ECD	DEF		SLEEVE, Synchronizer
13	05191682AA	1	J, U			ECD	DEF		GEAR, Second
14	05191419AA	1	J, U			ECD	DEF		BEARING, Needle
15	05191685AA	1	J, U			ECD	DEF		RACE, Inner
16	05191678AA	1	J, U			ECD	DEF		SNAP RING PACKAGE, Transmission
17	05191697AA	2	J, U			ECD	DEF		SPACER, Gear
18	05191422AA	2	J, U			ECD	DEF		BEARING, Needle
19	05191136AA	1	J, U			ECD	DEF		GEAR SUB ASSY, Fourth
20	05191700AA	1	J, U			ECD	DEF		RING SET, Synchronizer
21	05191704AA	1	J, U			ECD	DEF		HUB, Synchronizer
22	05191706AA	1	J, U			ECD	DEF		SLEEVE, Synchronizer
23	05191677AA	2	J, U			ECD	DEF		SNAP RING PACKAGE, Transmission
24	05191421AA	1	J, U			ECD	DEF		BEARING, Needle
25	05191696AA	1	J, U			ECD	DEF		SPACER, Gear
26	05191133AA	1	J, U			ECD	DEF		GEAR SUB ASSY, Third
27	05191415AA	1	J, U			ECD	DEF		BEARING, Ball
28	05191064AA	1	J, U			ECD	DEF		SNAP RING

COMPASS/PATRIOT (MK)

SERIES	LINE	BODY	ENGINE	TRANSMISSION
H = HIGHLINE L = LOWLINE P = PREMIUM	J = JEEP - 4WD T = JEEP - 2WD	49 = HATCHBACK TYPE #2 74 = SPORT UTILITY 4-DR TYPE #4	ED3 = 2.4L 4 Cyl DOHC 16V Dual VVT Engine	DD7 = 5-Speed Manual T355 Transmission DEF = 6-Speed Manual Aisin BG6 Trans DAV = Continuously Variable Transmission DAW = Cont.Var. w/Off-Rd Crawl Ratio Trans

AR = use ase required - = Non illustrrated part

Output Shaft / [NO.1]
Figure BG6-420

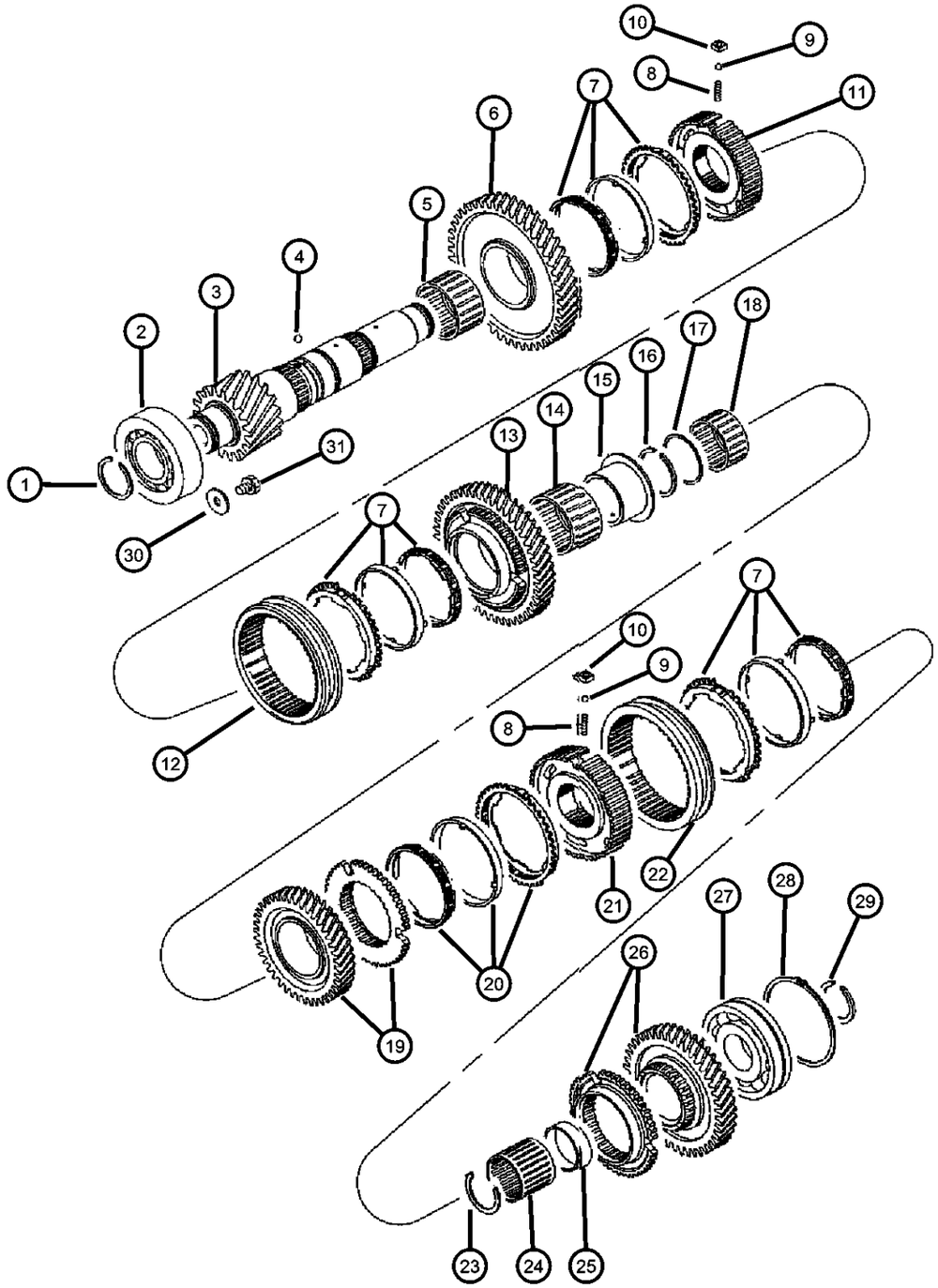

ITEM	PART NUMBER	QTY	LINE	SERIES	BODY	ENGINE	TRANS	TRIM	DESCRIPTION
29	05191676AA	1	J, U			ECD	DEF		SNAP RING PACKAGE, Transmission
30	05191052AA	2	J, U			ECD	DEF		PLATE, Transaxle Case Rear
31	68000007AA	2	J, U			ECD	DEF		BOLT AND WASHER

COMPASS/PATRIOT (MK)

SERIES	LINE	BODY	ENGINE	TRANSMISSION
H = HIGHLINE L = LOWLINE P = PREMIUM	J = JEEP - 4WD T = JEEP - 2WD	49 = HATCHBACK TYPE #2 74 = SPORT UTILITY 4-DR TYPE #4	ED3 = 2.4L 4 Cyl DOHC 16V Dual VVT Engine	DD7 = 5-Speed Manual T355 Transmission DEF = 6-Speed Manual Aisin BG6 Trans DAV = Continuously Variable Transmission DAW = Cont.Var. w/Off-Rd Crawl Ratio Trans

AR = use ase required - = Non illustrrated part

<< RETURN TO GROUP INDEX

Output Shaft / [NO.2]
Figure BG6-430

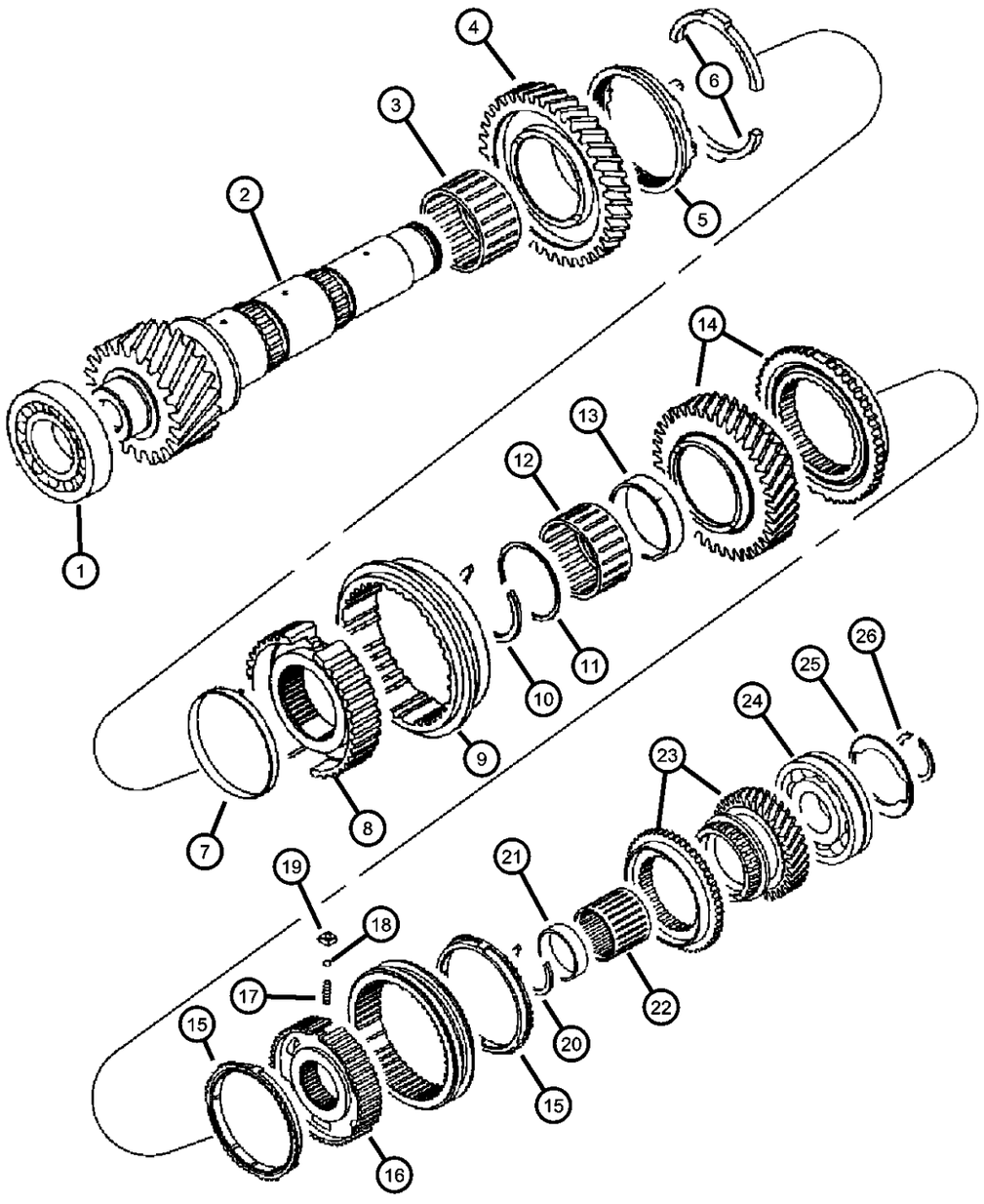

ITEM	PART NUMBER	QTY	LINE	SERIES	BODY	ENGINE	TRANS	TRIM	DESCRIPTION
NOTE:									
Sales Codes:									
[DEF]=6 Speed Manual Transmission - [AISIN / BG6]									
[ECD]=2.0L 4 Cyl. DOHC 16V Turbo Diesel Engine									
1	05191487AA	1	J, U			ECD	DEF		BEARING, Roller
2	05191680AA	1	J, U			ECD	DEF		SHAFT, Output
3	05191417AA	2	J, U			ECD	DEF		BEARING, Needle
4	05191183AA	1	J, U			ECD	DEF		GEAR, Reverse
5	05191709AA	1	J, U			ECD	DEF		RING, Synchronizer
6	05191712AA	2	J, U			ECD	DEF		KEY, Synchronizer
7	05191710AA	1	J, U			ECD	DEF		SPRING, Synchronizer
8	05191702AA	1	J, U			ECD	DEF		HUB, Synchronizer
9	05191701AA	1	J, U			ECD	DEF		SLEEVE, Synchronizer
10	05191660AA	1	J, U			ECD	DEF		SNAP RING PACKAGE, Transmission
11	05191697AA	2	J, U			ECD	DEF		SPACER, Gear
12	05191422AA	2	J, U			ECD	DEF		BEARING, Needle
13	05191695AA	1	J, U			ECD	DEF		SPACER, Gear
14	05191139AA	1	J, U			ECD	DEF		GEAR SUB ASSY, Fifth
15	05191669AA	1	J, U			ECD	DEF		SYNCHRONIZER
16	05191711AA	1	J, U			ECD	DEF		HUB, Synchronizer
17	05191708AA	9	J, U			ECD	DEF		SPRING, Synchronizer
18	05191714AA	9	J, U			ECD	DEF		BALL
19	05191707AA	9	J, U			ECD	DEF		KEY, Synchronizer
20	05191677AA	2	J, U			ECD	DEF		SNAP RING PACKAGE, Transmission
21	05191696AA	1	J, U			ECD	DEF		SPACER, Gear
22	05191426AA	1	J, U			ECD	DEF		BEARING, Needle
23	05191142AA	1	J, U			ECD	DEF		GEAR SUB ASSY, Sixth
24	05191494AA	1	J, U			ECD	DEF		BEARING, Roller
25	05191622AA	1	J, U			ECD	DEF		SHIM KIT, Transmission
26	05191676AA	1	J, U			ECD	DEF		SNAP RING PACKAGE, Transmission

COMPASS/PATRIOT (MK)

SERIES	LINE	BODY	ENGINE	TRANSMISSION
H = HIGHLINE L = LOWLINE P = PREMIUM	J = JEEP - 4WD T = JEEP - 2WD	49 = HATCHBACK TYPE #2 74 = SPORT UTILITY 4-DR TYPE #4	ED3 = 2.4L 4 Cyl DOHC 16V Dual VVT Engine	DD7 = 5-Speed Manual T355 Transmission DEF = 6-Speed Manual Aisin BG6 Trans DAV = Continuously Variable Transmission DAW = Cont.Var. w/Off-Rd Crawl Ratio Trans

Reverse Idler Gear
Figure BG6-440

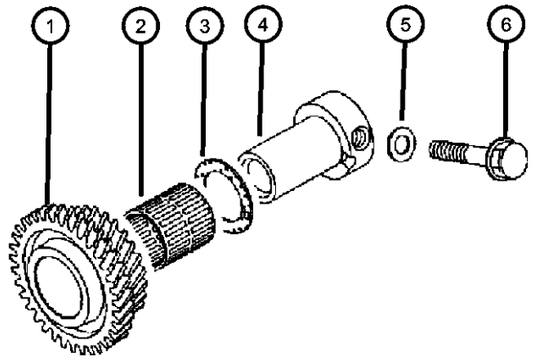

ITEM	PART NUMBER	QTY	LINE	SERIES	BODY	ENGINE	TRANS	TRIM	DESCRIPTION

NOTE:
Sales Codes:
[DEF]=6 Speed Manual Transmission - [AISIN / BG6]
[ECD]=2.0L 4 Cyl. DOHC 16V Turbo Diesel Engine

1	05191687AA	1	J, U			ECD	DEF		GEAR, Reverse Idler
2	05191427AA	1	J, U			ECD	DEF		BEARING, Needle
3	05191688AA	1	J, U			ECD	DEF		THRUST WASHER, Reverse Idler
4	05191686AA	1	J, U			ECD	DEF		SHAFT, SHAFT-REVERSE IDLER GEAR
5	05191691AA	1	J, U			ECD	DEF		GASKET, Gear Housing
6	05191690AA	1	J, U			ECD	DEF		BOLT

COMPASS/PATRIOT (MK)

SERIES	LINE	BODY	ENGINE	TRANSMISSION
H = HIGHLINE L = LOWLINE P = PREMIUM	J = JEEP - 4WD T = JEEP - 2WD	49 = HATCHBACK TYPE #2 74 = SPORT UTILITY 4-DR TYPE #4	ED3 = 2.4L 4 Cyl DOHC 16V Dual VVT Engine	DD7 = 5-Speed Manual T355 Transmission DEF = 6-Speed Manual Aisin BG6 Trans DAV = Continuously Variable Transmission DAW = Cont.Var. w/Off-Rd Crawl Ratio Trans

Differential
Figure BG6-810

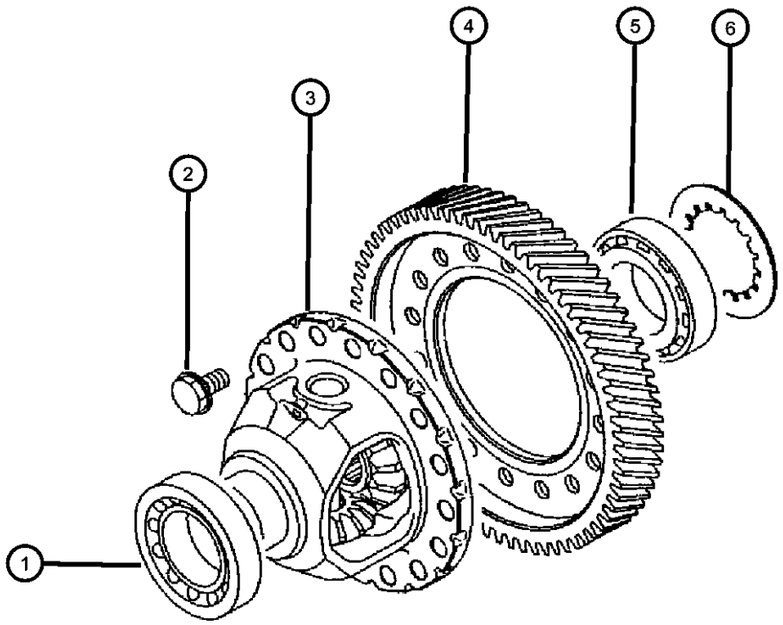

ITEM	PART NUMBER	QTY	LINE	SERIES	BODY	ENGINE	TRANS	TRIM	DESCRIPTION

NOTE:
Sales Codes:
[DEF]=6 Speed Manual Transmission - [AISIN / BG6]
[ECD]=2.0L 4 Cyl. DOHC 16V Turbo Diesel Engine

1	05191497AA	1	J, U			ECD	DEF		BEARING, Roller
2	05191090AA	16	J, U			ECD	DEF		BOLT, Differential
3	68003815AA	1	J, U			ECD	DEF		DIFFERENTIAL, Transaxle
4	05191689AA	1	J, U			ECD	DEF		GEAR, Differential Ring
5	05191500AA	1	J, U			ECD	DEF		BEARING, Roller
6	05191641AA	1	J, U			ECD	DEF		SHIM KIT, Transmission

COMPASS/PATRIOT (MK)

SERIES	LINE	BODY	ENGINE	TRANSMISSION
H = HIGHLINE L = LOWLINE P = PREMIUM	J = JEEP - 4WD T = JEEP - 2WD	49 = HATCHBACK TYPE #2 74 = SPORT UTILITY 4-DR TYPE #4	ED3 = 2.4L 4 Cyl DOHC 16V Dual VVT Engine	DD7 = 5-Speed Manual T355 Transmission DEF = 6-Speed Manual Aisin BG6 Trans DAV = Continuously Variable Transmission DAW = Cont.Var. w/Off-Rd Crawl Ratio Trans

Fork & Rails
Figure BG6-910

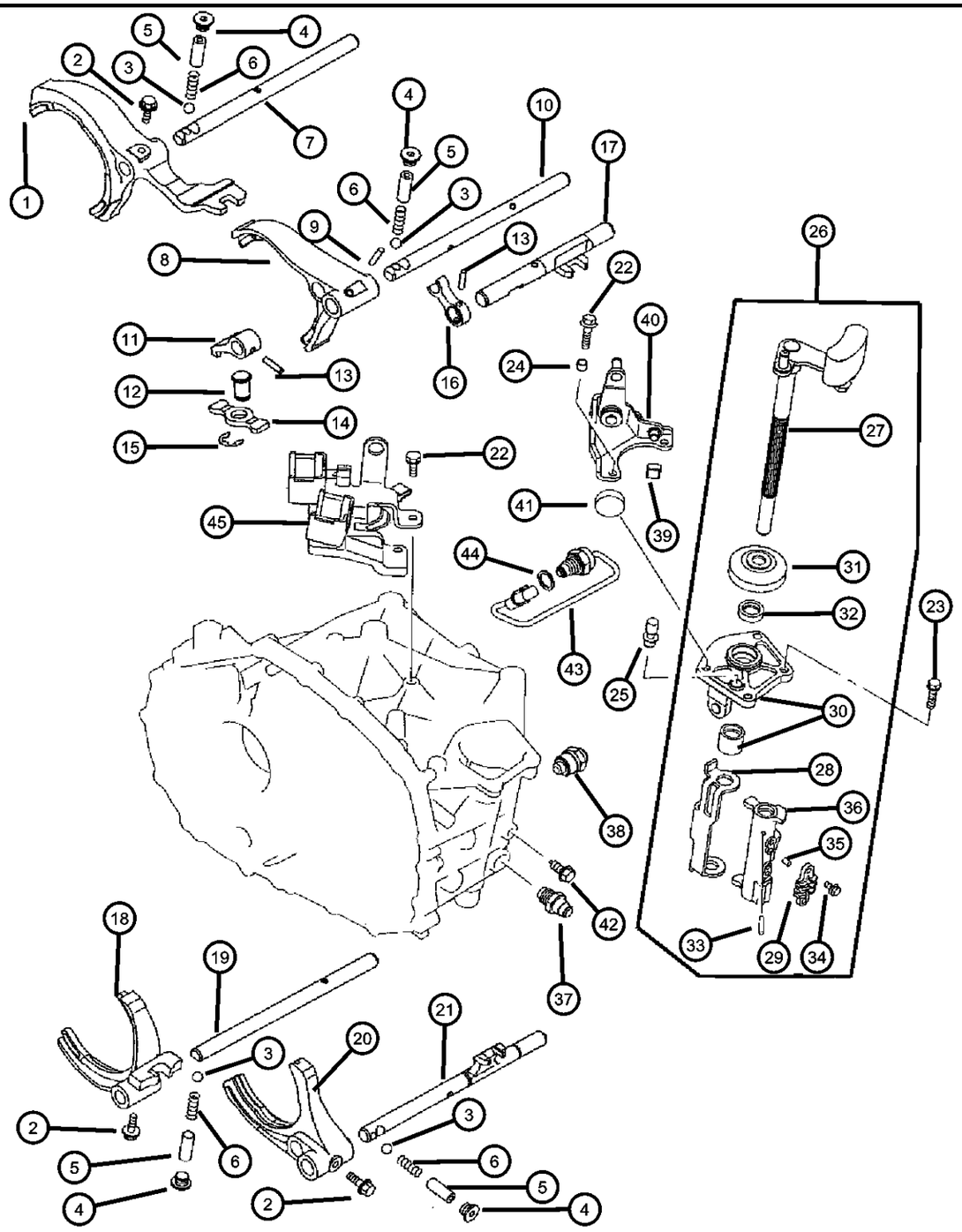

ITEM	PART NUMBER	QTY	LINE	SERIES	BODY	ENGINE	TRANS	TRIM	DESCRIPTION
NOTE:									
Sales Codes:									
[DEF]=6 Speed Manual Transmission - [AISIN / BG6]									
[ECD]=2.0L 4 Cyl. DOHC 16V Turbo Diesel Engine									
1	05191504AA	1	J, U			ECD	DEF		FORK, First and Second
2	05191613AA	3	J, U			ECD	DEF		BOLT, Gearshift Control
3	05191619AA	4	J, U			ECD	DEF		BEARING, Ball
4	05191360AA	5	J, U			ECD	DEF		PLUG
5	68000010AA	4	J, U			ECD	DEF		DETENT, Gearshift, Ball Spring Seat
6	05191620AA	4	J, U			ECD	DEF		SPRING
7	05191538AA	1	J, U			ECD	DEF		SHAFT, Gear Shift Fork, Number 1
8	05191510AA	1	J, U			ECD	DEF		FORK, Third and Fourth
9	05191569AA	1	J, U			ECD	DEF		PIN, Gearshift Lock
10	05191543AA	1	J, U			ECD	DEF		SHAFT, Gear Shift Fork, Number 2
11	05191528AA	1	J, U			ECD	DEF		HEAD, Gear shift
12	05191523AA	1	J, U			ECD	DEF		PIVOT, Fork, Shift arm
13	05191617AA	2	J, U			ECD	DEF		PIN, Spring
14	05191520AA	1	J, U			ECD	DEF		FORK, FORK-SHIFT
15	05191621AA	1	J, U			ECD	DEF		E RING, Shifter
16	68002809AA	1	U, J			ECD	DEF		HEAD, Transmission gearshift no. 3
17	05191546AA	1	J, U			ECD	DEF		SHAFT, Gear Shift Fork, Number 5
18	05191525AA	1	J, U			ECD	DEF		FORK, Fifth and Sixth
19	05191544AA	1	J, U			ECD	DEF		SHAFT, Gear Shift Fork, Number 3
20	05191513AA	1	J, U			ECD	DEF		FORK, Reverse
21	05191545AA	1	J, U			ECD	DEF		SHAFT, Gear Shift Fork, Number 4
22	05191055AA	1	J, U			ECD	DEF		BOLT AND WASHER
23	05191614AA	4	J, U			ECD	DEF		BOLT AND WASHER
24	05191618AA	2	J, U			ECD	DEF		BEARING
25	05191363AA	1	J, U			ECD	DEF		PLUG
26	05191557AA	1	J, U			ECD	DEF		SHIFTER, Transmission, Contains Items 27 to 36
27	05191559AA	1	J, U			ECD	DEF		SHAFT, Shift Lever
28	05191560AA	1	J, U			ECD	DEF		PLATE, Gearshift Shaft Stopper

COMPASS/PATRIOT (MK)

SERIES	LINE	BODY	ENGINE	TRANSMISSION
H = HIGHLINE L = LOWLINE P = PREMIUM	J = JEEP - 4WD T = JEEP - 2WD	49 = HATCHBACK TYPE #2 74 = SPORT UTILITY 4-DR TYPE #4	ED3 = 2.4L 4 Cyl DOHC 16V Dual VVT Engine	DD7 = 5-Speed Manual T355 Transmission DEF = 6-Speed Manual Aisin BG6 Trans DAV = Continuously Variable Transmission DAW = Cont.Var. w/Off-Rd Crawl Ratio Trans

Fork & Rails
Figure BG6-910

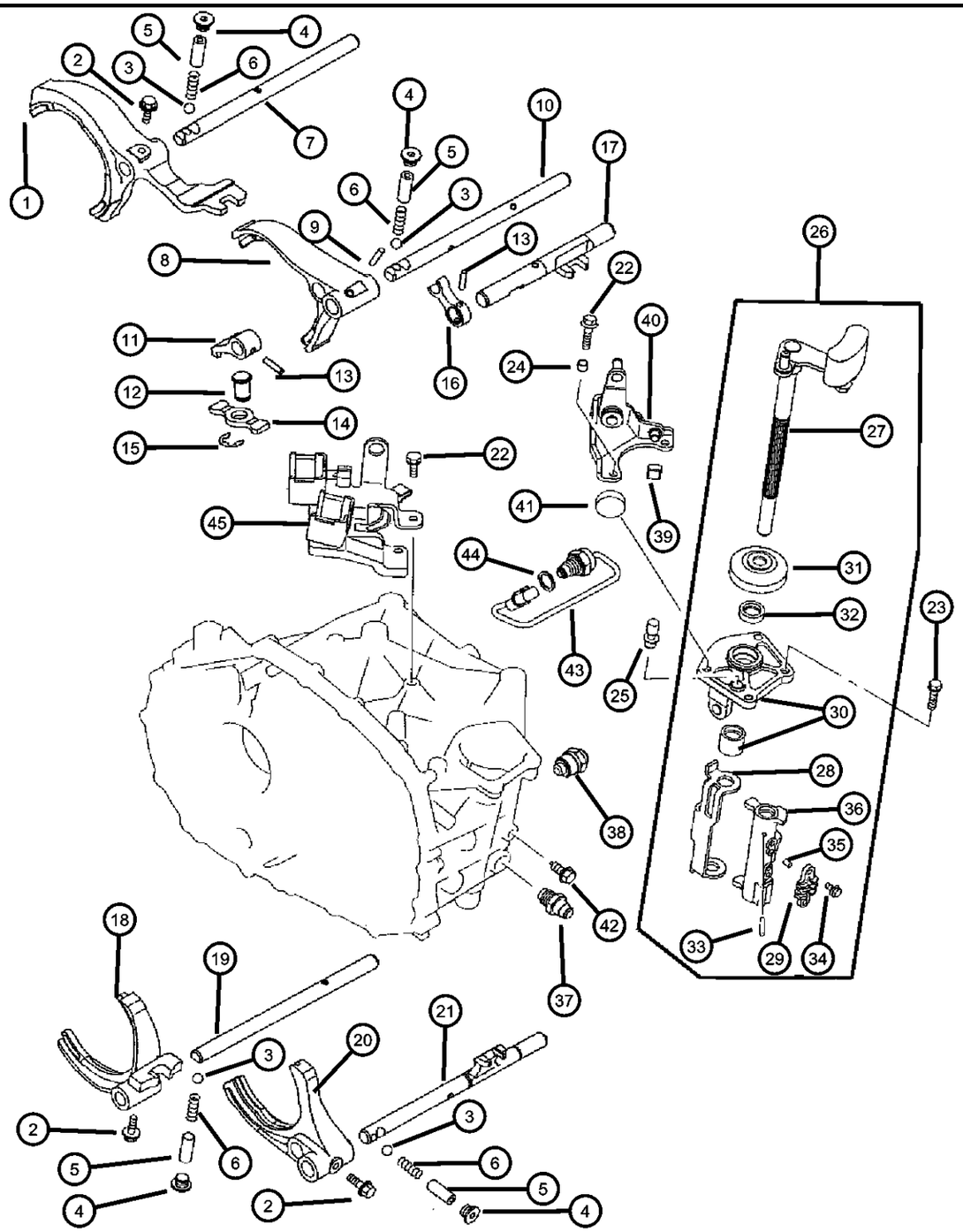

ITEM	PART NUMBER	QTY	LINE	SERIES	BODY	ENGINE	TRANS	TRIM	DESCRIPTION
29	05191561AA	1	J, U			ECD	DEF		PLATE, Guide, Shifter
30	05191562AA	1	J, U			ECD	DEF		COVER, Gearshift, Includes Items 31 and 32
31	05191564AA	1	J, U			ECD	DEF		BOOT, Gearshift
32	05191566AA	1	J, U			ECD	DEF		SEAL, Shift Lever
33	05191569AA	1	J, U			ECD	DEF		PIN, Gearshift Lock
34	05191568AA	1	J, U			ECD	DEF		BOLT, Gearshift Control
35	05191570AA	1	J, U			ECD	DEF		PIN, Straight
36	68003180AA	1	J, U			ECD	DEF		LEVER, Gearshift
37	05191584AA	1	J, U			ECD	DEF		BALL
38	05191585AA	1	J, U			ECD	DEF		BALL, Lock
39	05191586AA	1	J, U			ECD	DEF		COVER, Transaxle Dust
40	05191589AA	1	J, U			ECD	DEF		BELLCRANK, Shifter selector, Assembly, Includes Item # 41
41	05191592AA	1	J, U			ECD	DEF		COVER, Dust, Bellcrank
42	05191615AA	1	J, U			ECD	DEF		PIN, Straight
43	05191045AA	1	J, U			ECD	DEF		SWITCH, Back Up Lamp, Includes Item # 44
44	05191046AA	1	J, U			ECD	DEF		GASKET, Back Up Lamp Switch
45	05191054AA	1	J, U			ECD	DEF		BRACKET, Transmission Control Cable

COMPASS/PATRIOT (MK)

SERIES	LINE	BODY	ENGINE	TRANSMISSION
H = HIGHLINE L = LOWLINE P = PREMIUM	J = JEEP - 4WD T = JEEP - 2WD	49 = HATCHBACK TYPE #2 74 = SPORT UTILITY 4-DR TYPE #4	ED3 = 2.4L 4 Cyl DOHC 16V Dual VVT Engine	DD7 = 5-Speed Manual T355 Transmission DEF = 6-Speed Manual Aisin BG6 Trans DAV = Continuously Variable Transmission DAW = Cont.Var. w/Off-Rd Crawl Ratio Trans

Gearshift Control
Figure BG6-1210

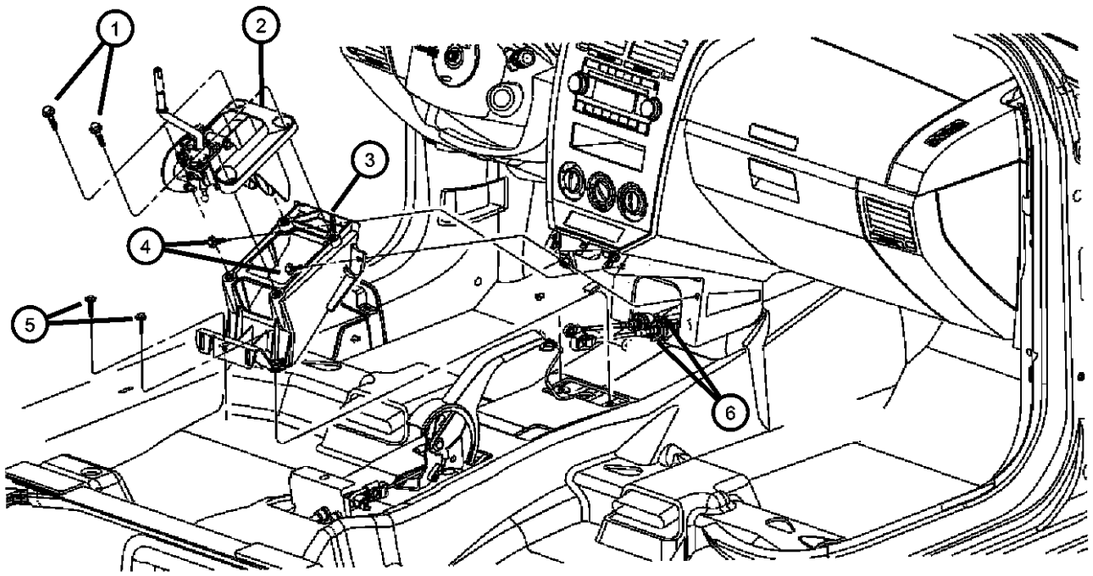

ITEM	PART NUMBER	QTY	LINE	SERIES	BODY	ENGINE	TRANS	TRIM	DESCRIPTION
NOTE:									
Sales Codes:									
[DEF]=6 Speed Manual Transmission - [AISIN / BG6]									
1	06104392AA	4	J, T, U				DD7, DEF		BOLT AND WASHER
2	05106041AA	1	J, T, U			ECD	DEF		SHIFTER, Transmission, Includes Knob and Boot
3	05291763AB	1	J, T, U				DD7, DEF		BRACKET, Gearshift
4	06105099AA	2	J, T, U						SCREW
5	06105099AA	2	J, T, U						SCREW
6	05062132AC	1	J, T, U			ECD	DEF		CABLE, Gear Selector
-7	68018106AA	4	J, T, U				DEF		CLIP, Retainer

COMPASS/PATRIOT (MK)

SERIES	LINE	BODY	ENGINE	TRANSMISSION
H = HIGHLINE L = LOWLINE P = PREMIUM	J = JEEP - 4WD T = JEEP - 2WD	49 = HATCHBACK TYPE #2 74 = SPORT UTILITY 4-DR TYPE #4	ED3 = 2.4L 4 Cyl DOHC 16V Dual VVT Engine	DD7 = 5-Speed Manual T355 Transmission DEF = 6-Speed Manual Aisin BG6 Trans DAV = Continuously Variable Transmission DAW = Cont.Var. w/Off-Rd Crawl Ratio Trans

Shift Knob & Bezel
Figure BG6-1220

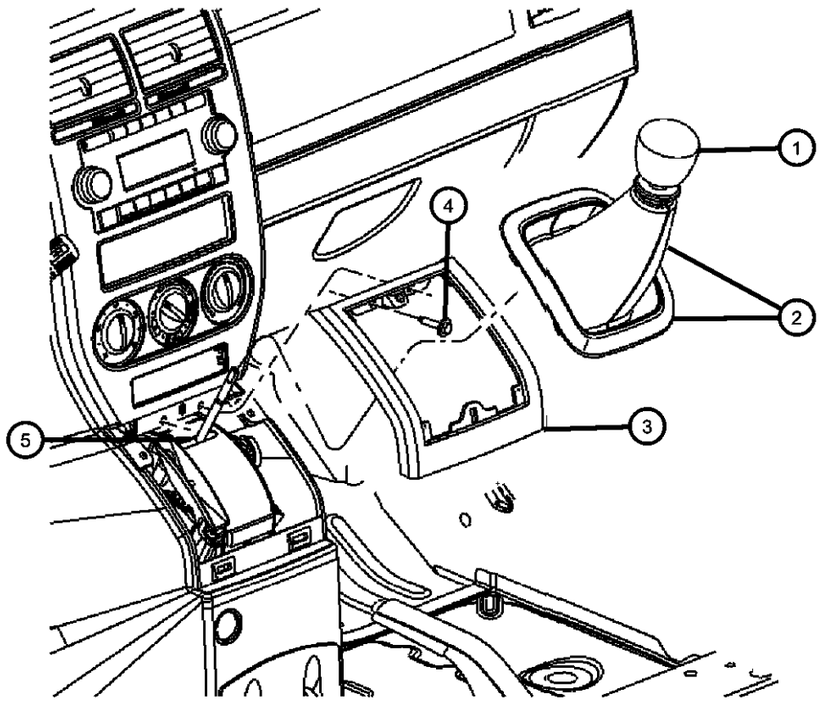

ITEM	PART NUMBER	QTY	LINE	SERIES	BODY	ENGINE	TRANS	TRIM	DESCRIPTION
NOTE:									
Sales Codes:									
[DEF]=6 Speed Manual Transmission - [AISIN / BG6]									
1	05273462AB	1					DEF		KNOB, Gearshift
2	05105708AB	1					DEF		BOOT, Gearshift
3	0YZ99DSFAA	1	J, T, U						BEZEL, Console Shifter
4	06105099AA	2	J, T, U						SCREW
5	05106041AA	1	J, T, U			ECD	DEF		SHIFTER, Transmission, Includes Knob #1 and Boot #2

COMPASS/PATRIOT (MK)

SERIES	LINE	BODY	ENGINE	TRANSMISSION
H = HIGHLINE L = LOWLINE P = PREMIUM	J = JEEP - 4WD T = JEEP - 2WD	49 = HATCHBACK TYPE #2 74 = SPORT UTILITY 4-DR TYPE #4	ED3 = 2.4L 4 Cyl DOHC 16V Dual VVT Engine	DD7 = 5-Speed Manual T355 Transmission DEF = 6-Speed Manual Aisin BG6 Trans DAV = Continuously Variable Transmission DAW = Cont.Var. w/Off-Rd Crawl Ratio Trans

Cable To Transaxle
Figure BG6-1230

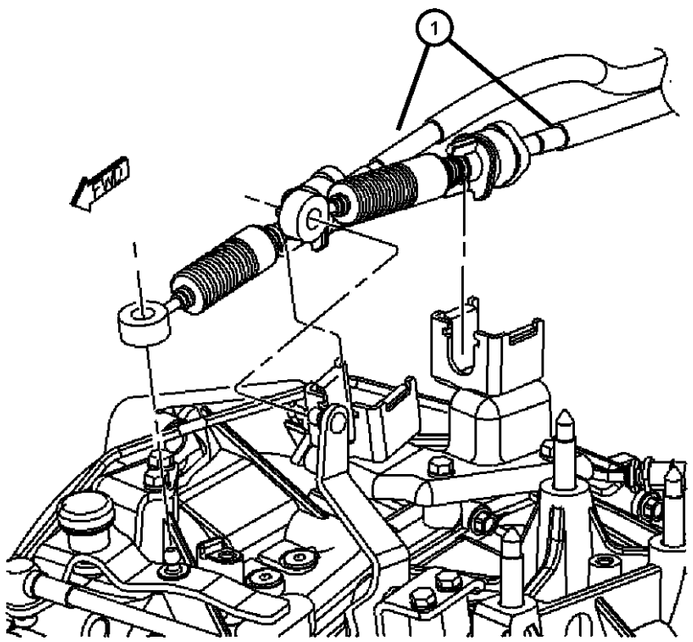

ITEM	PART NUMBER	QTY	LINE	SERIES	BODY	ENGINE	TRANS	TRIM	DESCRIPTION

NOTE:
Sales Codes:
[DEF]=5 Speed Manual Transmission - [AISIN / BG6]
[ECD]=2.0L 4 Cyl. DOHC 16 V Diesel Engine

1	05062125AB	1	J, T, U				DEF		CABLE, Gear Selector
-2	68018106AA	4	J, T, U				DEF		CLIP, Retainer

COMPASS/PATRIOT (MK)

SERIES	LINE	BODY	ENGINE	TRANSMISSION
H = HIGHLINE L = LOWLINE P = PREMIUM	J = JEEP - 4WD T = JEEP - 2WD	49 = HATCHBACK TYPE #2 74 = SPORT UTILITY 4-DR TYPE #4	ED3 = 2.4L 4 Cyl DOHC 16V Dual VVT Engine	DD7 = 5-Speed Manual T355 Transmission DEF = 6-Speed Manual Aisin BG6 Trans DAV = Continuously Variable Transmission DAW = Cont.Var. w/Off-Rd Crawl Ratio Trans

Group - T355

NVG Manual Transaxle 5 Speed

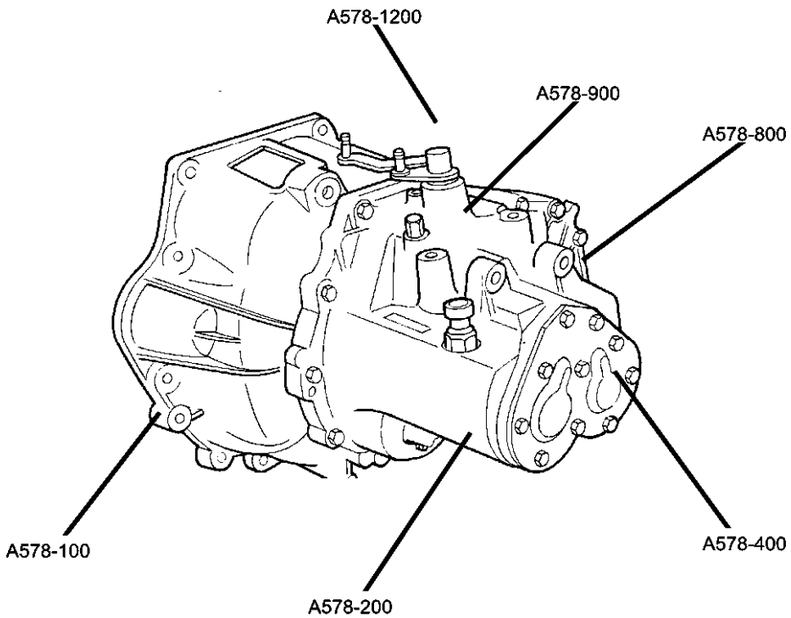

T355-100 Transaxle Assembly 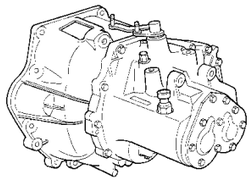	**T355-1200** Gearshift Controls 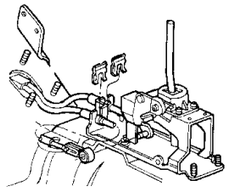	**T355-200** Case and Extension 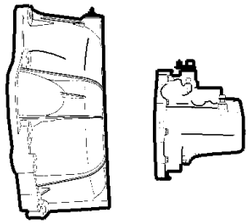	**T355-400** Gear Train 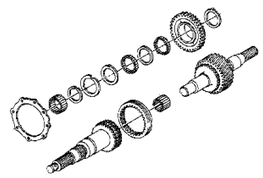
T355-800 Differential 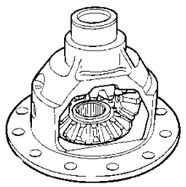	**T355-900** Fork and Rails 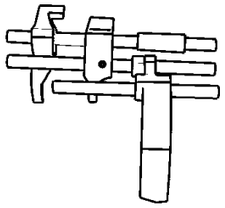		

Group - T355 NVG Manual Transaxle 5 Speed

Illustration Title — Group-Fig. No.

Transaxle Assembly
Transaxle Assembly ..... Fig. T355 - 110

Case and Extension
Case, Transaxle & Related Parts ..... Fig. T355 - 210

Gear Train
Geartrain ..... Fig. T355 - 410

Differential
Differential ..... Fig. T355 - 810

Fork and Rails
Fork & Rails ..... Fig. T355 - 910

Gearshift Controls
Gearshift Control ..... Fig. T355 - 1210
Shift Knob & Bezel ..... Fig. T355 - 1220
Cable To Transaxle ..... Fig. T355 - 1230

Transaxle Assembly
Figure T355-110

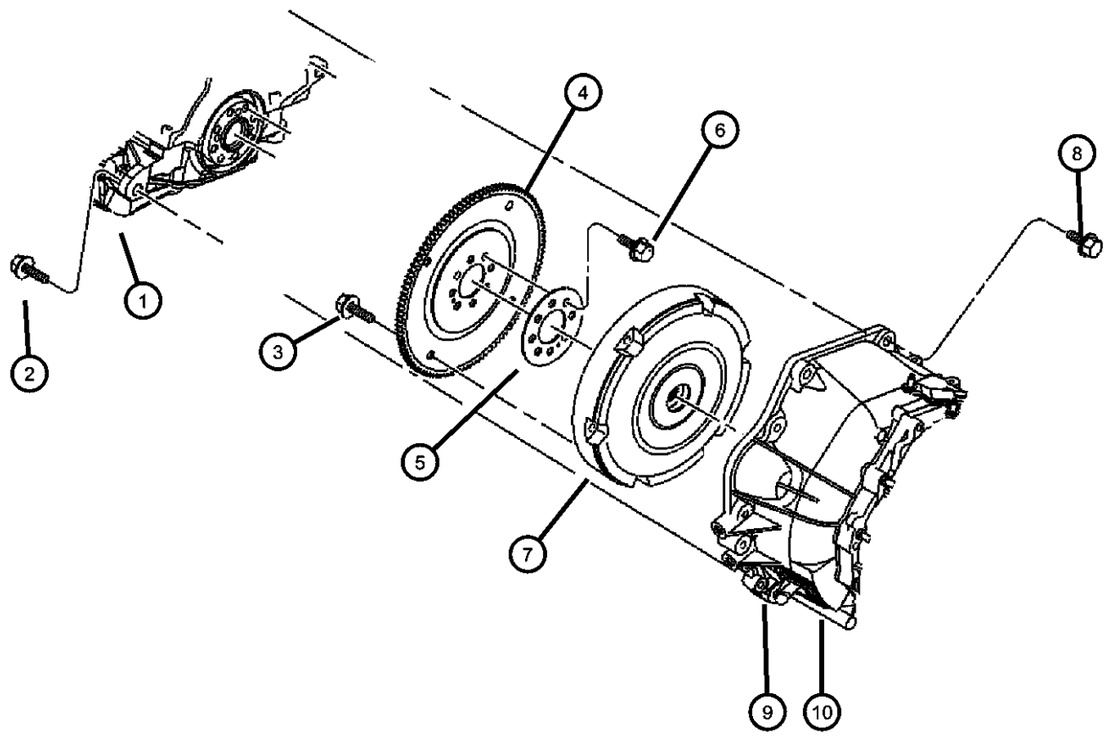

ITEM	PART NUMBER	QTY	LINE	SERIES	BODY	ENGINE	TRANS	TRIM	DESCRIPTION
									NOTE: Sales Codes: [DD7]=5 Speed Manual Transmission - [T355] [ED3]=2.4L 4 Cyl. DOHC 16V [VVT] Engine
1	68018106AA	4							ENGINE, Complete, See Engine Group, (NOT SERVICED)
2	MF140467	6					DD7		BOLT
3	06504383	6	J, T, U			ED3	DD7		BOLT, Hex Head, M10x1.50 x 13.20
4	04736238AA	1					DAV, DD7		PLATE, Torque Converter Drive
5	04736477AA	1					DAV, DD7		BACKING PLATE
6	05189932AA	7	J, T, U			ED3			BOLT PACKAGE, Driveplate To Crankshaft
7	05062150AB	1				ED3	DD7		CLUTCH, Modular
8	MF140467	6					DD7		BOLT
9	05190320AB	1	T			ED3	DD7		TRANSAXLE
	05013457AA								Mopar Automatic Transmission Fluid Quart
	05013458AA								Mopar Automatic Transmission Fluid Gallon
10	05273430AB	1	J, U			ED3	DD7		TRANSMISSION, 5 speed, 4wd
-11	05106051AA	1	T			ED3	DD7		REINFORCEMENT

COMPASS/PATRIOT (MK)

SERIES	LINE	BODY	ENGINE	TRANSMISSION
H = HIGHLINE L = LOWLINE P = PREMIUM	J = JEEP - 4WD T = JEEP - 2WD	49 = HATCHBACK TYPE #2 74 = SPORT UTILITY 4-DR TYPE #4	ED3 = 2.4L 4 Cyl DOHC 16V Dual VVT Engine	DD7 = 5-Speed Manual T355 Transmission DEF = 6-Speed Manual Aisin BG6 Trans DAV = Continuously Variable Transmission DAW = Cont.Var. w/Off-Rd Crawl Ratio Trans

Case, Transaxle & Related Parts
Figure T355-210

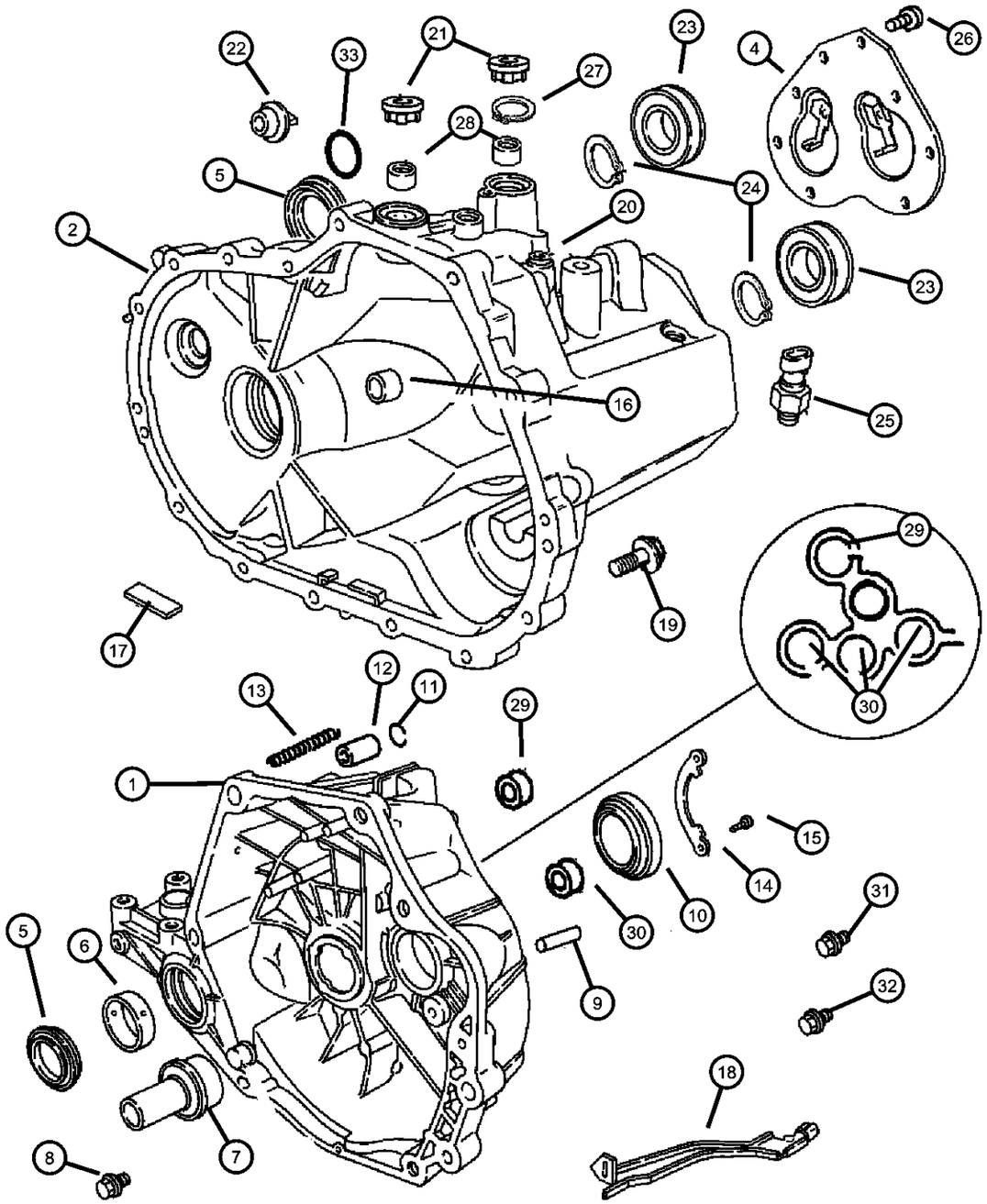

ITEM	PART NUMBER	QTY	LINE	SERIES	BODY	ENGINE	TRANS	TRIM	DESCRIPTION
NOTE:									
Sales Codes									
[DD7]=5 Speed Manual Transmission - [T355]									
1									HOUSING ASSEMBLY, Clutch & differential, Transfer case
	05183430AB	1	J, U			ED3	DD7		
	05189988AA	1	T			ED3	DD7		
2	05191000AA	1	J, T, U			ED3			CASE, Transmission
-3									STUD, M12x1.75/M10x1.25x94.5
	04761085	1	J, U			ED3	DD7		
		1	T			ED3	DD7		
4									PLATE, Transaxle Case Rear
	05189984AA	1	T			ED3	DD7		
		1	J, U			ED3	DD7		
5									SEAL, Axle Drive Shaft
	05189989AA	1	J, U			ED3	DD7		
		1	T			ED3	DD7		
6									BEARING CUP, Differential
	04567022	1	J, U			ED3	DD7		
		1	T			ED3	DD7		
7									BEARING, Input Shaft
	68001749AA	1	T			ED3	DD7		
		1	J, U			ED3	DD7		
8									PLUG, Oil Fill
	04348325	2	T			ED3	DD7		Drain & Fill
		2	J, U			ED3	DD7		Drain & Fill
9									PIN, Locating
	04761099	1	J, U			ED3	DD7		
		2	T			ED3	DD7		
10									BEARING, Input Shaft
	05013634AA	2	J, U			ED3	DD7		Rear Input Shaft Bearing
		2	T			ED3	DD7		Rear Input Shaft Bearing
11									SNAP RING
	04761096	1	J, U			ED3	DD7		

COMPASS/PATRIOT (MK)

SERIES	LINE	BODY	ENGINE	TRANSMISSION
H = HIGHLINE	J = JEEP - 4WD	49 = HATCHBACK TYPE #2	ED3 = 2.4L 4 Cyl DOHC 16V Dual VVT Engine	DD7 = 5-Speed Manual T355 Transmission
L = LOWLINE	T = JEEP - 2WD	74 = SPORT UTILITY 4-DR TYPE #4		DEF = 6-Speed Manual Aisin BG6 Trans
P = PREMIUM				DAV = Continuously Variable Transmission
				DAW = Cont.Var. w/Off-Rd Crawl Ratio Trans

AR = use ase required - = Non illustrrated part

Case, Transaxle & Related Parts
Figure T355-210

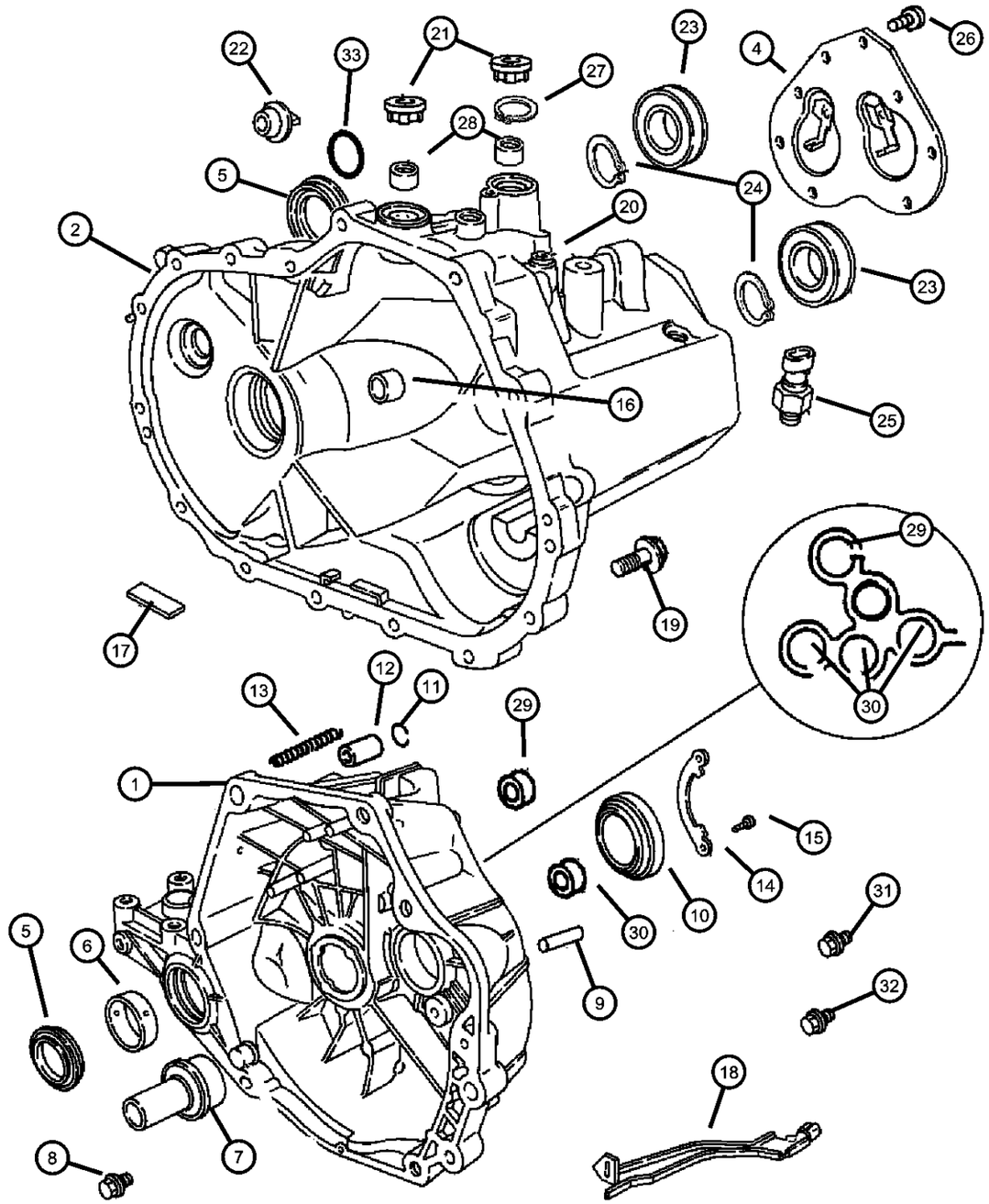

ITEM	PART NUMBER	QTY	LINE	SERIES	BODY	ENGINE	TRANS	TRIM	DESCRIPTION
		1	T			ED3	DD7		
12									DETENT, Shift Rail
	05189998AB	1	T			ED3	DD7		
		1	J, U			ED3	DD7		
13									SPRING, Select Detent
	68001762AA	1	T			ED3	DD7		
		1	J, U			ED3	DD7		
14									RETAINER, Transmission Output Shaft Bearing
	04761097	1	J, U			ED3	DD7		
		1	T			ED3	DD7		
15									BOLT, Output Shaft Bearing
	04761098	1	J, U			ED3	DD7		
		2	T			ED3	DD7		
16									BUSHING, Shift Rail
	04761076	2	J, U			ED3	DD7		
		2	T			ED3	DD7		
17									MAGNET, Transmission
	04761078AB	1	J, U			ED3	DD7		
		1	T			ED3	DD7		
18									TROUGH, Lubrication
	04761087	1	T			ED3	DD7		
		1	J, U			ED3	DD7		
19									BOLT AND CONED WASHER, Hex Head, M8x45x17
	06100299	16	J, U			ED3	DD7		
		16	T			ED3	DD7		
20									VENT, Cap, Jiggle
	05189847AA	1	J, U			ED3	DD7		
		1	T			ED3	DD7		
21									SEAL, Shift Lever
	04761077	2	J, U			ED3	DD7		
		2	T			ED3	DD7		

COMPASS/PATRIOT (MK)

SERIES	LINE	BODY	ENGINE	TRANSMISSION
H = HIGHLINE L = LOWLINE P = PREMIUM	J = JEEP - 4WD T = JEEP - 2WD	49 = HATCHBACK TYPE #2 74 = SPORT UTILITY 4-DR TYPE #4	ED3 = 2.4L 4 Cyl DOHC 16V Dual VVT Engine	DD7 = 5-Speed Manual T355 Transmission DEF = 6-Speed Manual Aisin BG6 Trans DAV = Continuously Variable Transmission DAW = Cont.Var. w/Off-Rd Crawl Ratio Trans

AR = use ase required - = Non illustrrated part

Case, Transaxle & Related Parts
Figure T355-210

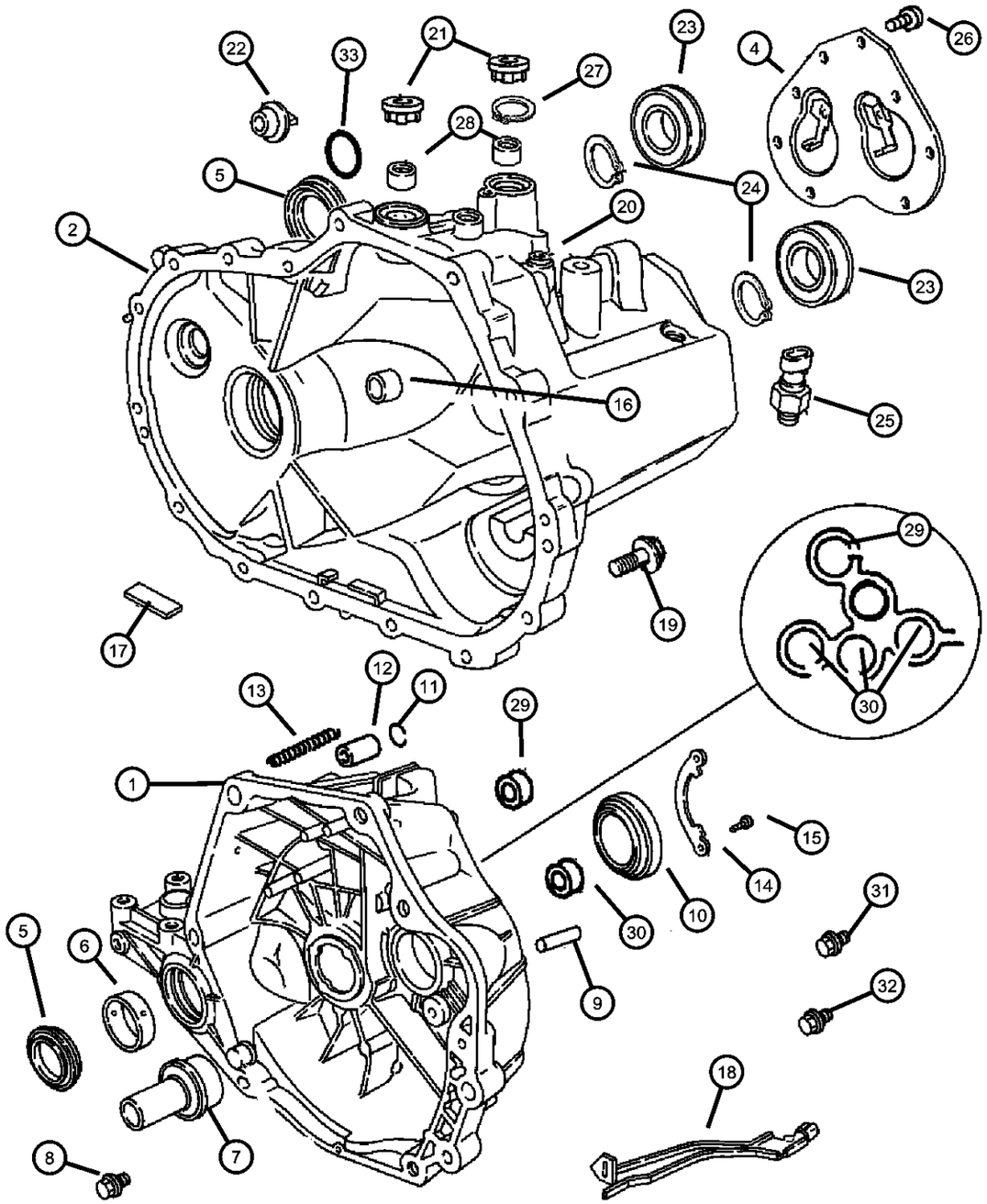

ITEM	PART NUMBER	QTY	LINE	SERIES	BODY	ENGINE	TRANS	TRIM	DESCRIPTION
22									PLUG, Oil Fill
	04348325	2	J, U			ED3	DD7		
		2	T			ED3	DD7		
23									BEARING, Input Shaft
	05013634AA	2	T			ED3	DD7		Rear Counter Shaft Bearing
		2	J, U			ED3	DD7		Rear Counter Shaft Bearing
24									SNAP RING
	04761096	1	J, U			ED3	DD7		
		1	T			ED3	DD7		
25									SWITCH, Back Up Lamp
	04864775	1	T			ED3	DD7		
	05163420AB	1	J, U			ED3	DD7		
26									BOLT, Case Plate
	04761082	9	J, U			ED3	DD7		
		9	T			ED3	DD7		
27									RETAINER, Shaft
	04762606	3	T			ED3	DD7		
		3	J, U			ED3	DD7		
28									BUSHING, Crossover Shaft
	04762602	1	J, U			ED3	DD7		
		1	T			ED3	DD7		
29									BUSHING, Shift Rail
	04761076	2	J, U			ED3	DD7		[15MM I.D.]
		2	T			ED3	DD7		[15MM I.D.]
30									BUSHING, Shift Rail
	04762605	1	U, J			ED3	DD7		
		1	T			ED3	DD7		
31	06102258AA	1				ED3			PLUG, Access Hole
32									PLUG, Transmission Drain
	04797323	1	J, U			ED3	DD7		
		1	T			ED3	DD7		
33		1							SHIM, See Differential Illustration, (NOT SERVICED)

COMPASS/PATRIOT (MK)

SERIES	LINE	BODY	ENGINE	TRANSMISSION
H = HIGHLINE	J = JEEP - 4WD	49 = HATCHBACK TYPE #2	ED3 = 2.4L 4 Cyl DOHC 16V Dual VVT Engine	DD7 = 5-Speed Manual T355 Transmission
L = LOWLINE	T = JEEP - 2WD	74 = SPORT UTILITY 4-DR TYPE #4		DEF = 6-Speed Manual Aisin BG6 Trans
P = PREMIUM				DAV = Continuously Variable Transmission
				DAW = Cont.Var. w/Off-Rd Crawl Ratio Trans

AR = use ase required - = Non illustrrated part

Geartrain
Figure T355-410

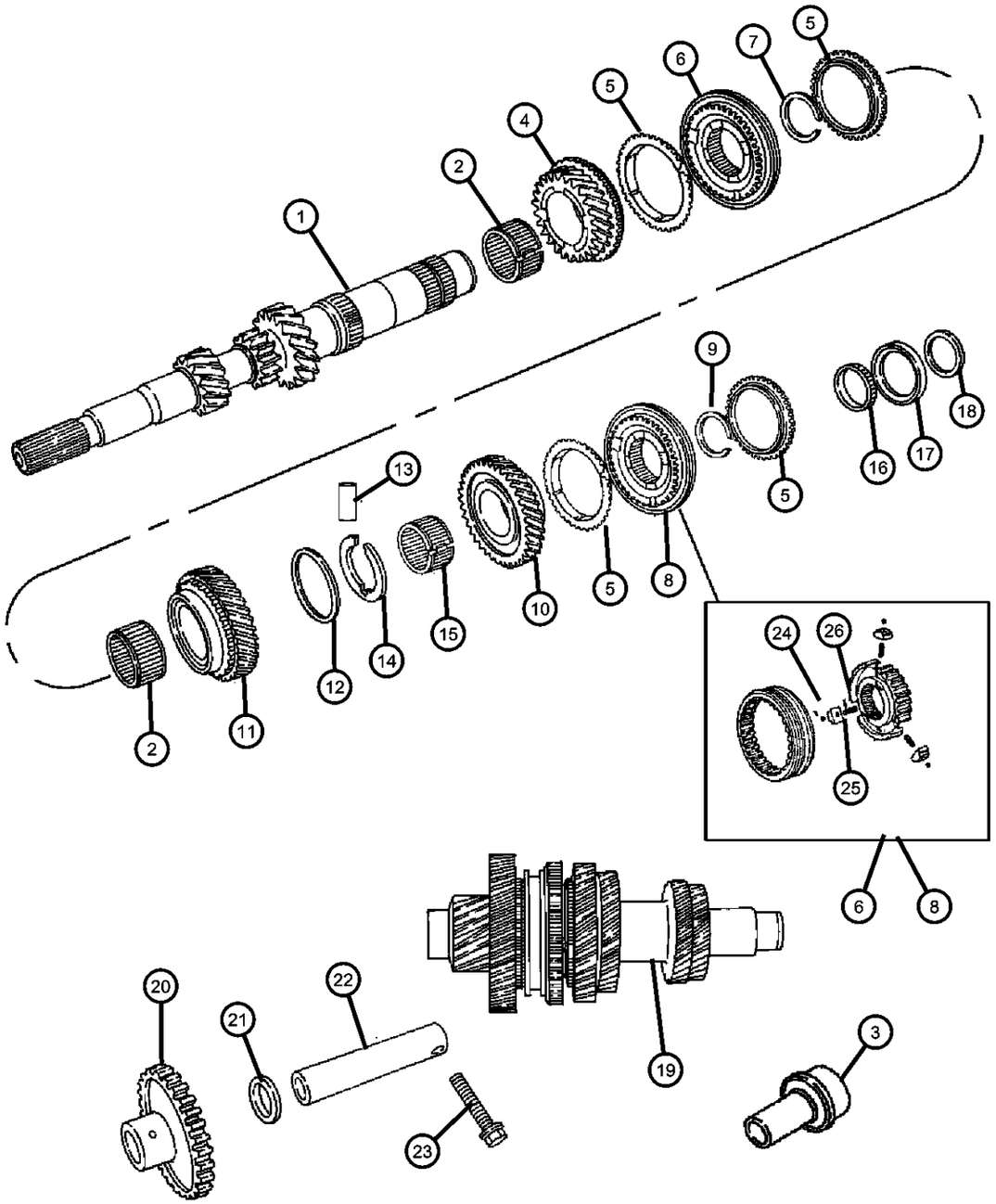

ITEM	PART NUMBER	QTY	LINE	SERIES	BODY	ENGINE	TRANS	TRIM	DESCRIPTION
NOTE:									
Sales Codes									
[DD7]=5 Speed Manual Transmission - [T355]									
1									INPUT SHAFT PACKAGE, Transaxle
	05191005AA	1	T			ED3	DD7		
		1	J, U			ED3	DD7		
2									NEEDLE BEARING
	04762612	1	J, U			ED3	DD7		
		1	T			ED3	DD7		
3									BEARING, Input Shaft
	05013634AA	2	J, U			ED3	DD7		
		2	T			ED3	DD7		
4									GEAR, Third
	05191010AB	1	J, U			ED3	DD7		
		1	T			ED3	DD7		
5									RING
	05191014AA	2	T			ED3	DD7		
		2	J, U			ED3	DD7		
6									SYNCHRONIZER, Third and Fourth
	05191011AA	1	J, U			ED3	DD7		
		1	T			ED3	DD7		
7									RING
	05069148AA	1	T			ED3	DD7		
		1	J, U			ED3	DD7		
8	05191017AA	1	J, T, U			ED3			SYNCHRONIZER, Fifth
9									RING
	05069148AA	1	J, U			ED3	DD7		
		1	T			ED3	DD7		
10									GEAR, Fifth
	05191016AA	1	J, U			ED3	DD7		
		1	T			ED3	DD7		
11									GEAR, Fourth

COMPASS/PATRIOT (MK)

SERIES	LINE	BODY	ENGINE	TRANSMISSION
H = HIGHLINE L = LOWLINE P = PREMIUM	J = JEEP - 4WD T = JEEP - 2WD	49 = HATCHBACK TYPE #2 74 = SPORT UTILITY 4-DR TYPE #4	ED3 = 2.4L 4 Cyl DOHC 16V Dual VVT Engine	DD7 = 5-Speed Manual T355 Transmission DEF = 6-Speed Manual Aisin BG6 Trans DAV = Continuously Variable Transmission DAW = Cont.Var. w/Off-Rd Crawl Ratio Trans

Geartrain
Figure T355-410

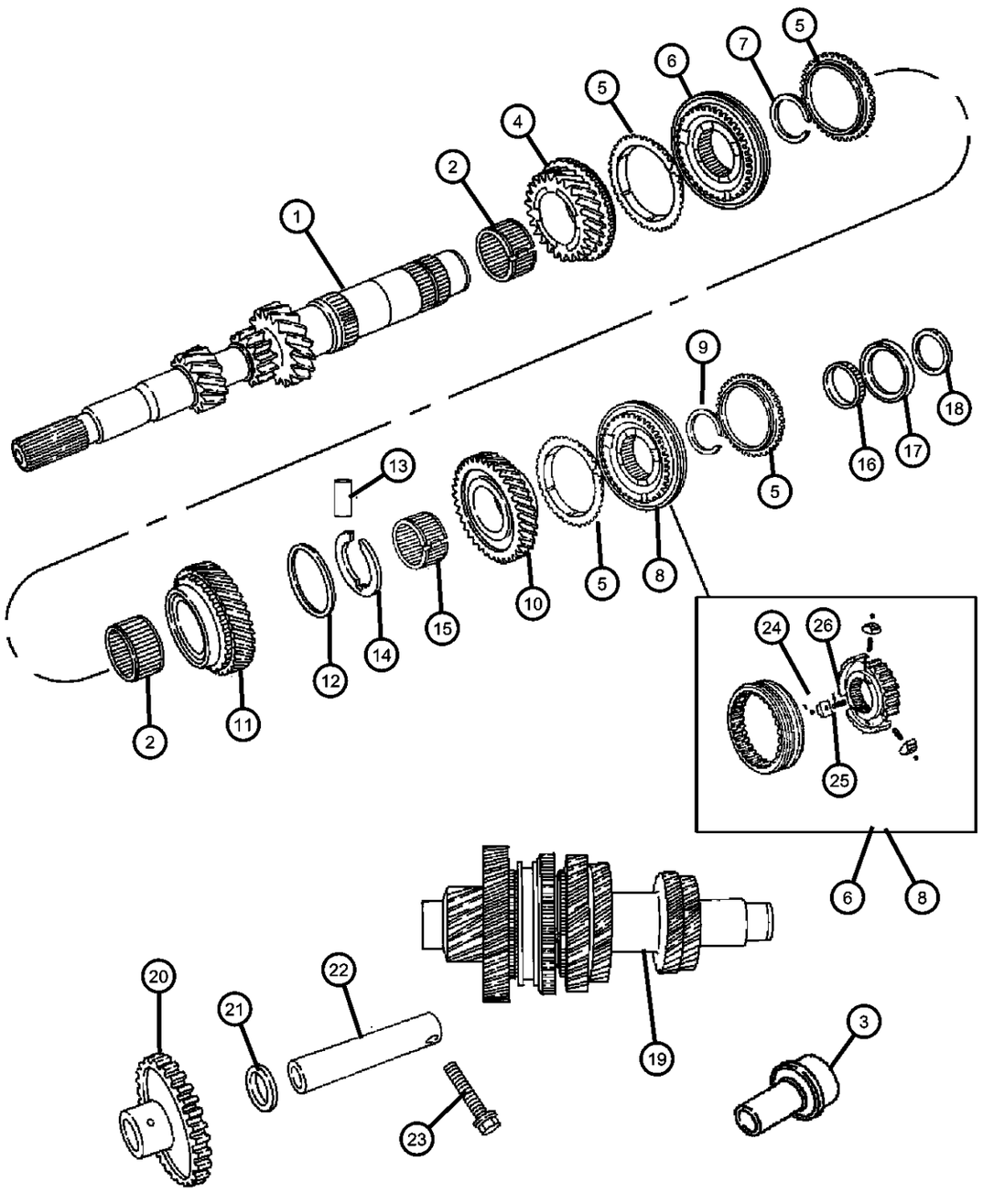

ITEM	PART NUMBER	QTY	LINE	SERIES	BODY	ENGINE	TRANS	TRIM	DESCRIPTION
	05191015AB	1	J, U			ED3	DD7		
		1	T			ED3	DD7		
12									RING, 4th Gear
	04761138	1	T			ED3	DD7		
		1	J, U			ED3	DD7		
13									PIN, Mainshaft
	04761140	1	J, U			ED3	DD7		
		1	T			ED3	DD7		
14									WASHER, Fourth Gear
	04761137	2	J, U			ED3	DD7		
		2	T			ED3	DD7		
15									NEEDLE BEARING
	04762612	1	J, U			ED3	DD7		
		1	T			ED3	DD7		
16									NEEDLE BEARING, Reverse Gear
	05069154AA	1	J, U			ED3	DD7		
		1	T			ED3	DD7		
17									BEARING CONE, Reverse Brake
	05102313AA	1	J, U			ED3	DD7		
		1	T			ED3	DD7		
18									SPACER, Reverse Idler
	04761127	1	J, U			ED3	DD7		
		1	T			ED3	DD7		
19									OUTPUT SHAFT, Transaxle
	05191018AA	1	J, U			ED3	DD7		
		1	T			ED3	DD7		
20									GEAR, Reverse Idler
	04886482AA	1	J, U			ED3	DD7		
		1	T			ED3	DD7		
21									SPACER, Reverse Idler
	04761127	1	J, U			ED3	DD7		
		1	T			ED3	DD7		

COMPASS/PATRIOT (MK)

SERIES	LINE	BODY	ENGINE	TRANSMISSION
H = HIGHLINE L = LOWLINE P = PREMIUM	J = JEEP - 4WD T = JEEP - 2WD	49 = HATCHBACK TYPE #2 74 = SPORT UTILITY 4-DR TYPE #4	ED3 = 2.4L 4 Cyl DOHC 16V Dual VVT Engine	DD7 = 5-Speed Manual T355 Transmission DEF = 6-Speed Manual Aisin BG6 Trans DAV = Continuously Variable Transmission DAW = Cont.Var. w/Off-Rd Crawl Ratio Trans

AR = use ase required - = Non illustrrated part

Geartrain
Figure T355-410

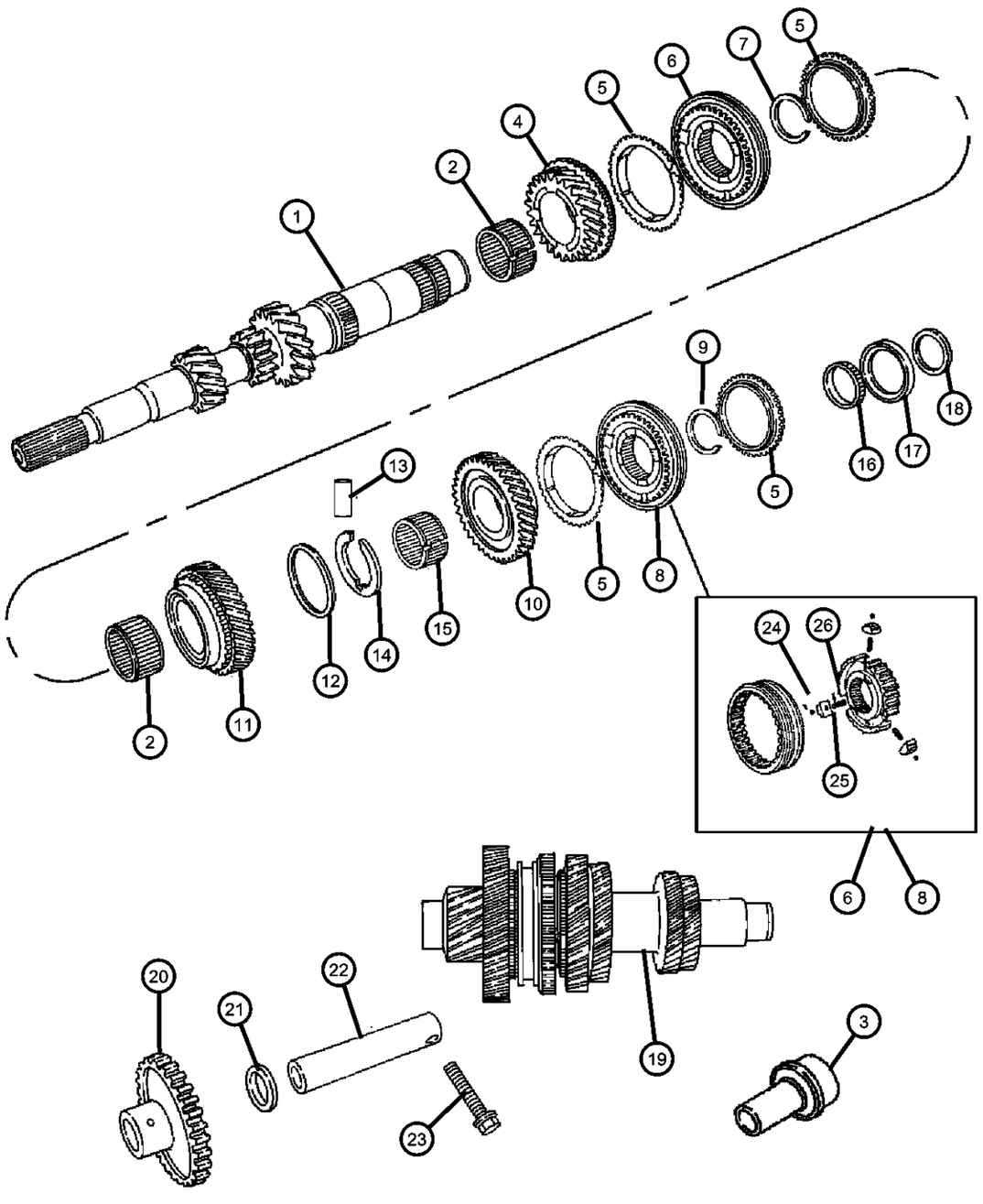

ITEM	PART NUMBER	QTY	LINE	SERIES	BODY	ENGINE	TRANS	TRIM	DESCRIPTION
22									IDLER SHAFT, Transmission
	04761126	1	J, U			ED3	DD7		
		1	T			ED3	DD7		
23									BOLT AND CONED WASHER, Hex Head, M8x45x17
	06100299	16	J, U			ED3	DD7		
		16	T			ED3	DD7		
24		16							BALL, Pivot, Serviced in Assembly, (NOT SERVICED)
25		16							KEY, Synchronizer, Serviced in Assembly, (NOT SERVICED)
26		16							SPRING, Synchronizer, Serviced in Assembly, (NOT SERVICED)

COMPASS/PATRIOT (MK)

SERIES	LINE	BODY	ENGINE	TRANSMISSION
H = HIGHLINE L = LOWLINE P = PREMIUM	J = JEEP - 4WD T = JEEP - 2WD	49 = HATCHBACK TYPE #2 74 = SPORT UTILITY 4-DR TYPE #4	ED3 = 2.4L 4 Cyl DOHC 16V Dual VVT Engine	DD7 = 5-Speed Manual T355 Transmission DEF = 6-Speed Manual Aisin BG6 Trans DAV = Continuously Variable Transmission DAW = Cont.Var. w/Off-Rd Crawl Ratio Trans

AR = use ase required - = Non illustrrated part

Differential
Figure T355-810

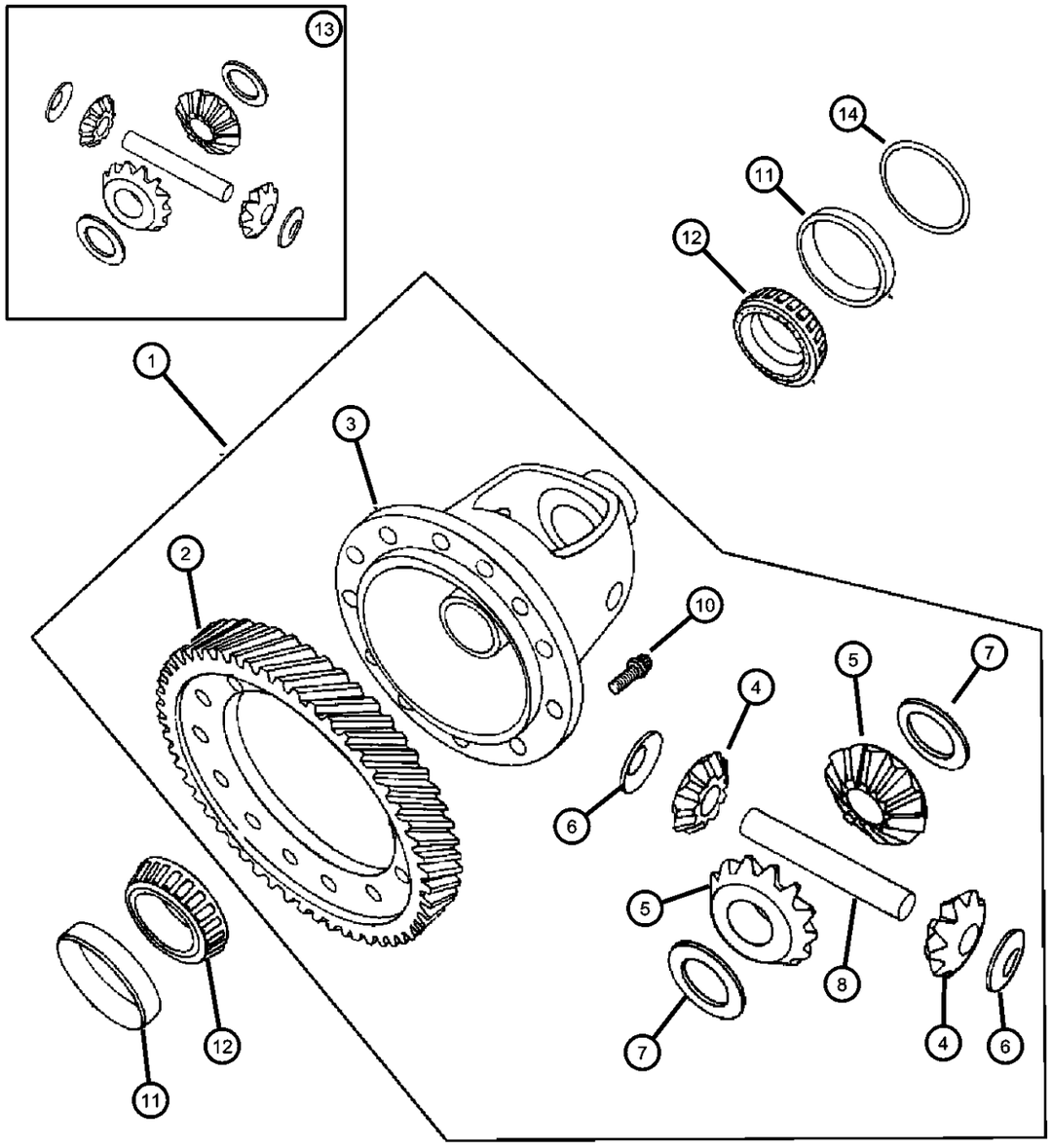

ITEM	PART NUMBER	QTY	LINE	SERIES	BODY	ENGINE	TRANS	TRIM	DESCRIPTION
NOTE:									
Sales Codes									
[DD7]=5 Speed Manual Transmission - [T355]									
1									DIFFERENTIAL, Transaxle
	05191026AA	1	T			ED3	DD7		
	05193430AB	1	J, U			ED3	DD7		
2									GEAR, Differential Ring
	05191029AA	1	T			ED3	DD7		
		1	J, U			ED3	DD7		
3									CASE, Differential
	05191027AA	1	T			ED3	DD7		
	05193301AB	1	J, U			ED3	DD7		
4	05193301AB	1							PINION, Differential, Serviced With [#1 Or #13] Only, (NOT SERVICED)
5	05193301AB	1							GEAR, Differential Side, Serviced With [#1 Or #13] Only, (NOT SERVICED)
6									WASHER, Pinion Gear
	05191033AA	2	J, U			ED3	DD7		
		2	T			ED3	DD7		
7									WASHER PACKAGE, Side Gear Thrust
	04504568	1	J, U			ED3	DD7		
		1	T			ED3	DD7		
8									SHAFT, Pinion Gear
	05191032AA	1	J, U			ED3	DD7		
		1	T			ED3	DD7		
-9									BRACKET, Differential Pinion Shaft
	05134957AA	2	J, U			ED3	DD7		
		2	T			ED3	DD7		
10									SCREW, Special Shouldered, M10x1x29
	06502034	12	J, U			ED3	DD7		
		12	T			ED3	DD7		
11									BEARING CUP, Differential

COMPASS/PATRIOT (MK)

SERIES	LINE	BODY	ENGINE	TRANSMISSION
H = HIGHLINE L = LOWLINE P = PREMIUM	J = JEEP - 4WD T = JEEP - 2WD	49 = HATCHBACK TYPE #2 74 = SPORT UTILITY 4-DR TYPE #4	ED3 = 2.4L 4 Cyl DOHC 16V Dual VVT Engine	DD7 = 5-Speed Manual T355 Transmission DEF = 6-Speed Manual Aisin BG6 Trans DAV = Continuously Variable Transmission DAW = Cont.Var. w/Off-Rd Crawl Ratio Trans

Differential
Figure T355-810

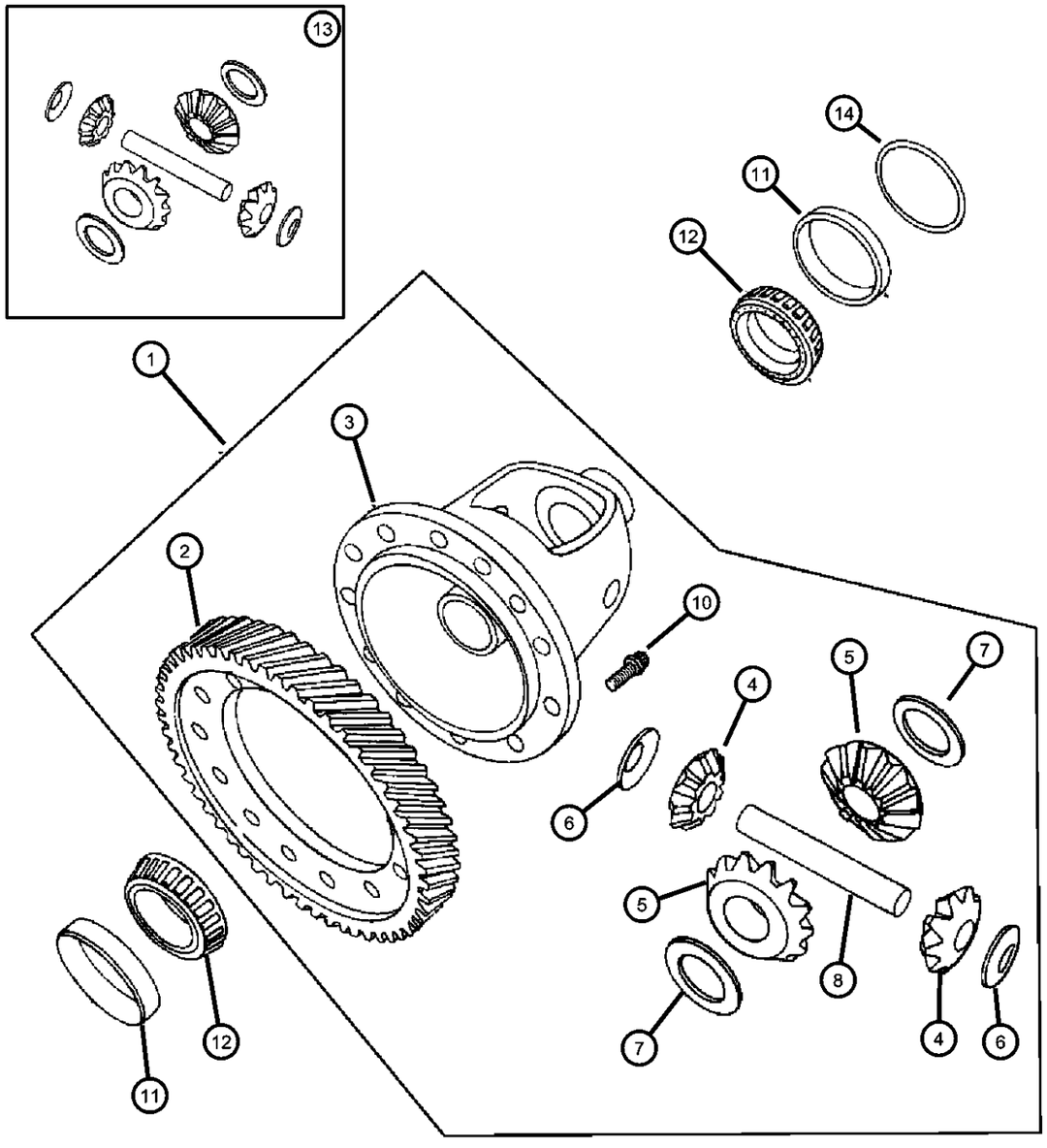

ITEM	PART NUMBER	QTY	LINE	SERIES	BODY	ENGINE	TRANS	TRIM	DESCRIPTION
	04567022	1	T			ED3	DD7		
		1	J, U			ED3	DD7		
12									BEARING CONE, Differential
	04567025AB	2	T			ED3	DD7		
		2	J, U			ED3	DD7		
13									GEAR PACKAGE, Differential
	05191034AA	1	T			ED3	DD7		
		1	J, U			ED3	DD7		
14									SHIM, Final Drive, .50mm
	05222345	1	T			ED3	DD7		
	68005000AA	1	J, U			ED3	DD7		
-15									SHIM, Final Drive, .54mm
	05222346	1	T			ED3	DD7		
	68005400AA	1	J, U			ED3	DD7		
-16									SHIM, Final Drive, .58mm
	05222347	1	T			ED3	DD7		
	68005800AA	1	J, U			ED3	DD7		
-17									SHIM, Final Drive, .62mm
	05222348	1	T			ED3	DD7		
	68006200AA	1	J, U			ED3	DD7		
-18									SHIM, Final Drive, .66mm
	05222349	1	T			ED3	DD7		
	68006600AA	1	J, U			ED3	DD7		
-19									SHIM, Final Drive, .70mm
	05222350	1	T			ED3	DD7		
	68007000AA	1	J, U			ED3	DD7		
-20									SHIM, Final Drive, .74mm
	05222351	1	T			ED3	DD7		
	68007400AA	1	J, U			ED3	DD7		
-21									SHIM, Final Drive, .78mm
	05222352	1	T			ED3	DD7		
	68007800AA	1	J, U			ED3	DD7		

COMPASS/PATRIOT (MK)

SERIES	LINE	BODY	ENGINE	TRANSMISSION
H = HIGHLINE L = LOWLINE P = PREMIUM	J = JEEP - 4WD T = JEEP - 2WD	49 = HATCHBACK TYPE #2 74 = SPORT UTILITY 4-DR TYPE #4	ED3 = 2.4L 4 Cyl DOHC 16V Dual VVT Engine	DD7 = 5-Speed Manual T355 Transmission DEF = 6-Speed Manual Aisin BG6 Trans DAV = Continuously Variable Transmission DAW = Cont.Var. w/Off-Rd Crawl Ratio Trans

AR = use ase required - = Non illustrrated part

Differential
Figure T355-810

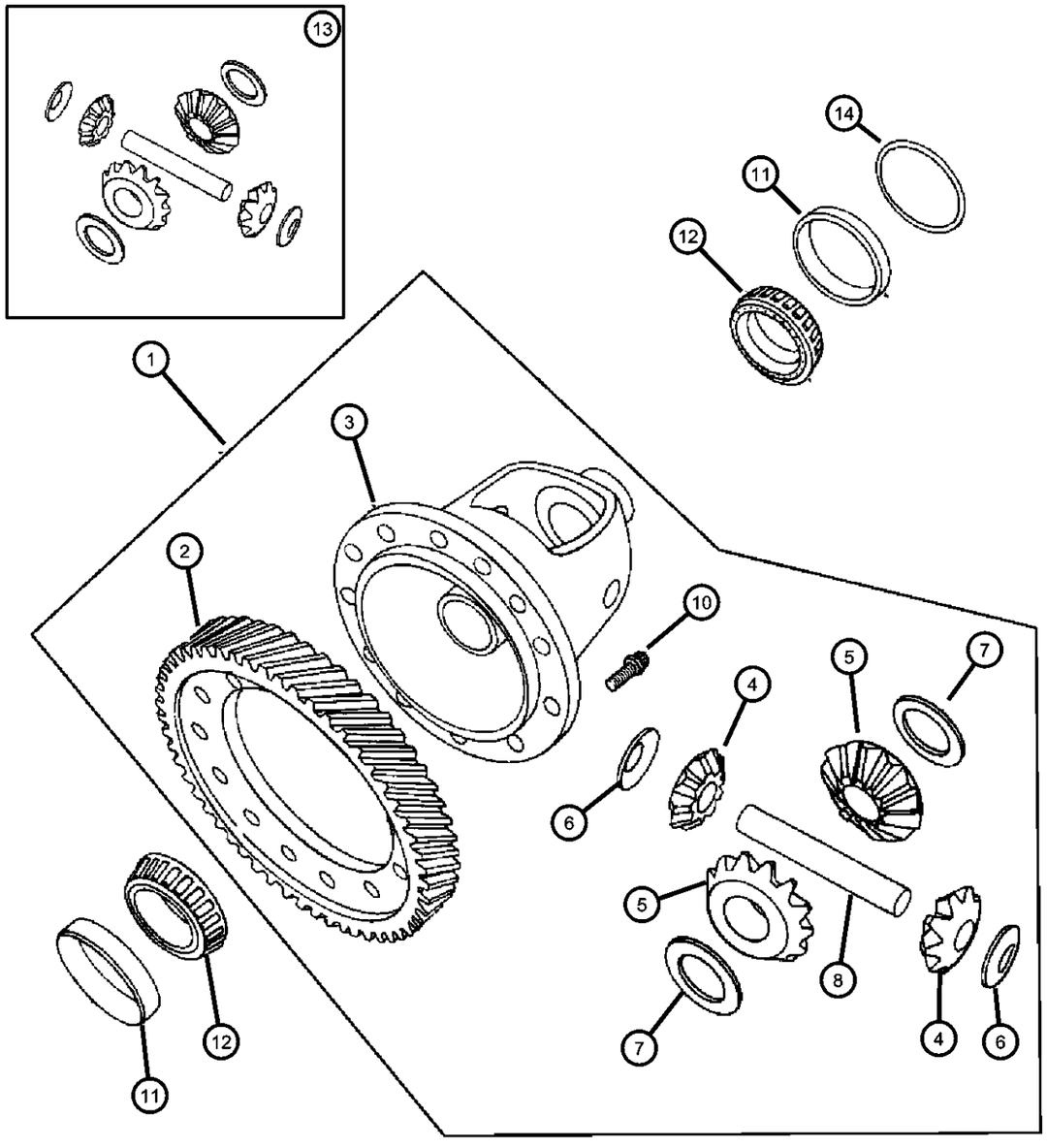

ITEM	PART NUMBER	QTY	LINE	SERIES	BODY	ENGINE	TRANS	TRIM	DESCRIPTION
-22									SHIM, Final Drive, .82mm
	05222353	1	T			ED3	DD7		
	68008200AA	1	J, U			ED3	DD7		
-23									SHIM, Final Drive, .86mm
	05222354	1	T			ED3	DD7		
	68008600AA	1	J, U			ED3	DD7		
-24									SHIM, Final Drive, .90mm
	05222355	1	T			ED3	DD7		
	68009000AA	1	J, U			ED3	DD7		
-25									SHIM, Final Drive, .94mm
	05222356	1	T			ED3	DD7		
	68009400AA	1	J, U			ED3	DD7		
-26									SHIM, Final Drive, .98mm
	05222357	1	T			ED3	DD7		
	68009800AA	1	J, U			ED3	DD7		
-27									SHIM, Final Drive, 1.02mm
	05222358	1	T			ED3	DD7		
	68001020AA	1	J, U			ED3	DD7		
-28									SHIM, Final Drive, 1.06mm
	05222359	1	T			ED3	DD7		
	68001060AA	1	J, U			ED3	DD7		
-29	05222360	1	T			ED3	DD7		SPACER, Final Drive, 1.10mm
-30	68001101AA	1	J, U			ED3	DD7		SHIM, Final drive, 1.10mm
-31	05222361	1	T			ED3	DD7		SPACER, Final Drive, 1.14mm
-32	68001149AA	1	J, U			ED3	DD7		SHIM, Final drive, 1.14mm
-33									SHIM, Final Drive, 1.18mm
	05222362	1	T			ED3	DD7		
	68011800AA	1	J, U			ED3	DD7		
-34									SHIM, Final Drive, 1.22mm
	05222363	1	T			ED3	DD7		
	68012200AA	1	J, U			ED3	DD7		
-35									SHIM, Final Drive, 1.26mm

COMPASS/PATRIOT (MK)

SERIES	LINE	BODY	ENGINE	TRANSMISSION
H = HIGHLINE L = LOWLINE P = PREMIUM	J = JEEP - 4WD T = JEEP - 2WD	49 = HATCHBACK TYPE #2 74 = SPORT UTILITY 4-DR TYPE #4	ED3 = 2.4L 4 Cyl DOHC 16V Dual VVT Engine	DD7 = 5-Speed Manual T355 Transmission DEF = 6-Speed Manual Aisin BG6 Trans DAV = Continuously Variable Transmission DAW = Cont.Var. w/Off-Rd Crawl Ratio Trans

AR = use ase required - = Non illustrrated part

Differential
Figure T355-810

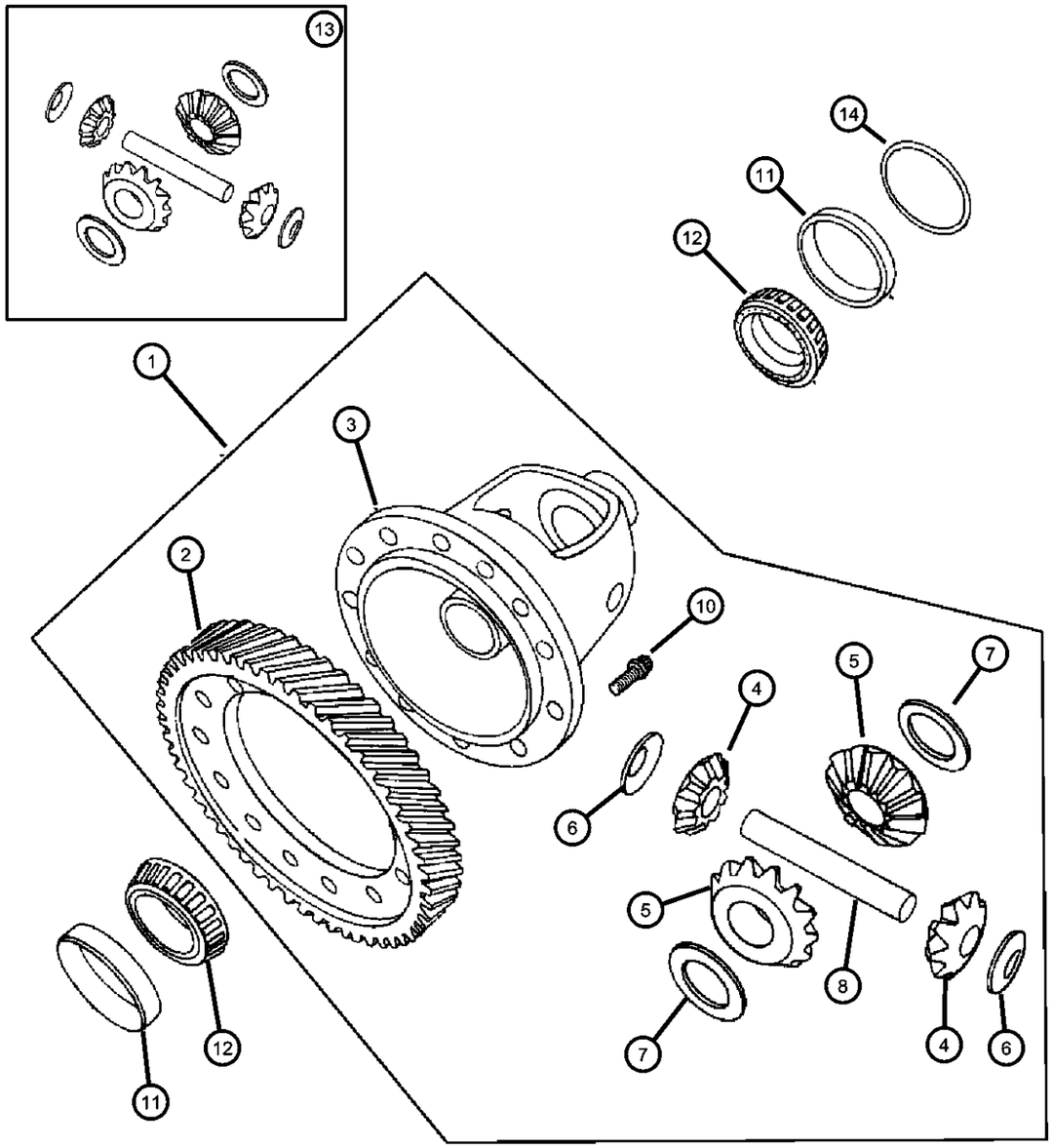

ITEM	PART NUMBER	QTY	LINE	SERIES	BODY	ENGINE	TRANS	TRIM	DESCRIPTION
	05222364	1	T			ED3	DD7		
	68012600AA	1	J, U			ED3	DD7		
-36									SHIM, Final Drive, 1.30mm
	05222365	1	T			ED3	DD7		
	68013000AA	1	J, U			ED3	DD7		
-37									SHIM, Final Drive, 1.34mm
	05222366	1	T			ED3	DD7		
	68013400AA	1	J, U			ED3	DD7		
-38									SHIM, Final Drive, 1.38mm
	05222367	1	T			ED3	DD7		
	68013800AA	1	J, U			ED3	DD7		
-39									SHIM, Final Drive, 1.46mm
	05222369	1	T			ED3	DD7		
	68014600AA	1	J, U			ED3	DD7		
-40	05222370	1	T			ED3	DD7		SPACER, Final Drive, 1.50mm
-41	68015000AA	1	J, U			ED3	DD7		SHIM, Final drive, 1.50mm
-42	05222371	1	T			ED3	DD7		SPACER, Final Drive, 1.54mm
-43	68015400AA	1	J, U			ED3	DD7		SHIM, Final drive, 1.54mm
-44	05222372	1	T			ED3	DD7		SPACER, Final Drive, 1.58mm
-45	68015800AA	1	J, U			ED3	DD7		SHIM, Final drive, 1.58mm

COMPASS/PATRIOT (MK)

SERIES	LINE	BODY	ENGINE	TRANSMISSION
H = HIGHLINE L = LOWLINE P = PREMIUM	J = JEEP - 4WD T = JEEP - 2WD	49 = HATCHBACK TYPE #2 74 = SPORT UTILITY 4-DR TYPE #4	ED3 = 2.4L 4 Cyl DOHC 16V Dual VVT Engine	DD7 = 5-Speed Manual T355 Transmission DEF = 6-Speed Manual Aisin BG6 Trans DAV = Continuously Variable Transmission DAW = Cont.Var. w/Off-Rd Crawl Ratio Trans

AR = use ase required - = Non illustrrated part

Fork & Rails
Figure T355-910

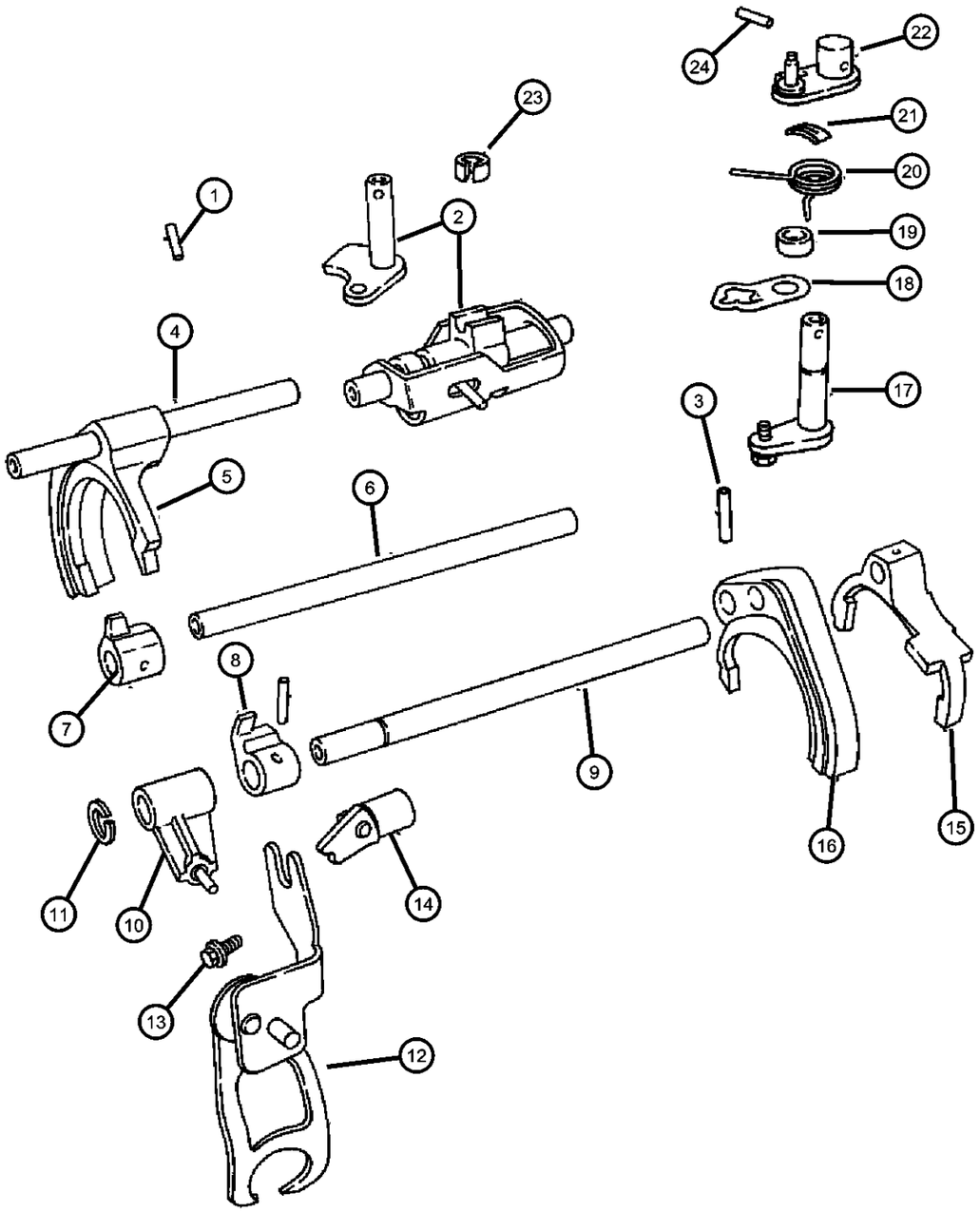

ITEM	PART NUMBER	QTY	LINE	SERIES	BODY	ENGINE	TRANS	TRIM	DESCRIPTION
NOTE:									
Sales Codes									
[DD7]=5 Speed Manual Transmission - [T355]									
1									PIN, Shift Shaft
	04778249	1	J, U			ED3	DD7		
		1	T			ED3	DD7		
2									BLOCKER, Shift
	05191019AA	1	J, U			ED3	DD7		
		1	T			ED3	DD7		
3									PIN, Roll
	05010082AB	1	T			ED3	DD7		
	05160355AB	1	J, U			ED3	DD7		
4									RAIL, First and Second Shift
	04761176	1	J, U			ED3	DD7		Includes: Fork, Rail & Pin
		1	T			ED3	DD7		Includes: Fork, Rail & Pin
5									FORK, Transmission
	04796649AB	1	T			ED3	DD7		
		1	J, U			ED3	DD7		
6									RAIL, First and Second Shift
	04761176	1	J, U			ED3	DD7		[3Rd] & [4Th] Shift
		1	T			ED3	DD7		[3Rd] & [4Th] Shift
7									LUG, Third and Fourth Shift
	04761179	1	J, U			ED3	DD7		
		1	T			ED3	DD7		
8									LUG, Fifth and Reverse
	04761181	1	J, U			ED3	DD7		
		1	T			ED3	DD7		
9									RAIL, Fifth and Reverse Shift
	05191022AA	1	J, U			ED3	DD7		
		1	T			ED3	DD7		
10									ARM, Reverse Lever
	04761182	1	J, U			ED3	DD7		
		1	T			ED3	DD7		

COMPASS/PATRIOT (MK)

SERIES	LINE	BODY	ENGINE	TRANSMISSION
H = HIGHLINE L = LOWLINE P = PREMIUM	J = JEEP - 4WD T = JEEP - 2WD	49 = HATCHBACK TYPE #2 74 = SPORT UTILITY 4-DR TYPE #4	ED3 = 2.4L 4 Cyl DOHC 16V Dual VVT Engine	DD7 = 5-Speed Manual T355 Transmission DEF = 6-Speed Manual Aisin BG6 Trans DAV = Continuously Variable Transmission DAW = Cont.Var. w/Off-Rd Crawl Ratio Trans

AR = use ase required - = Non illustrrated part

Fork & Rails
Figure T355-910

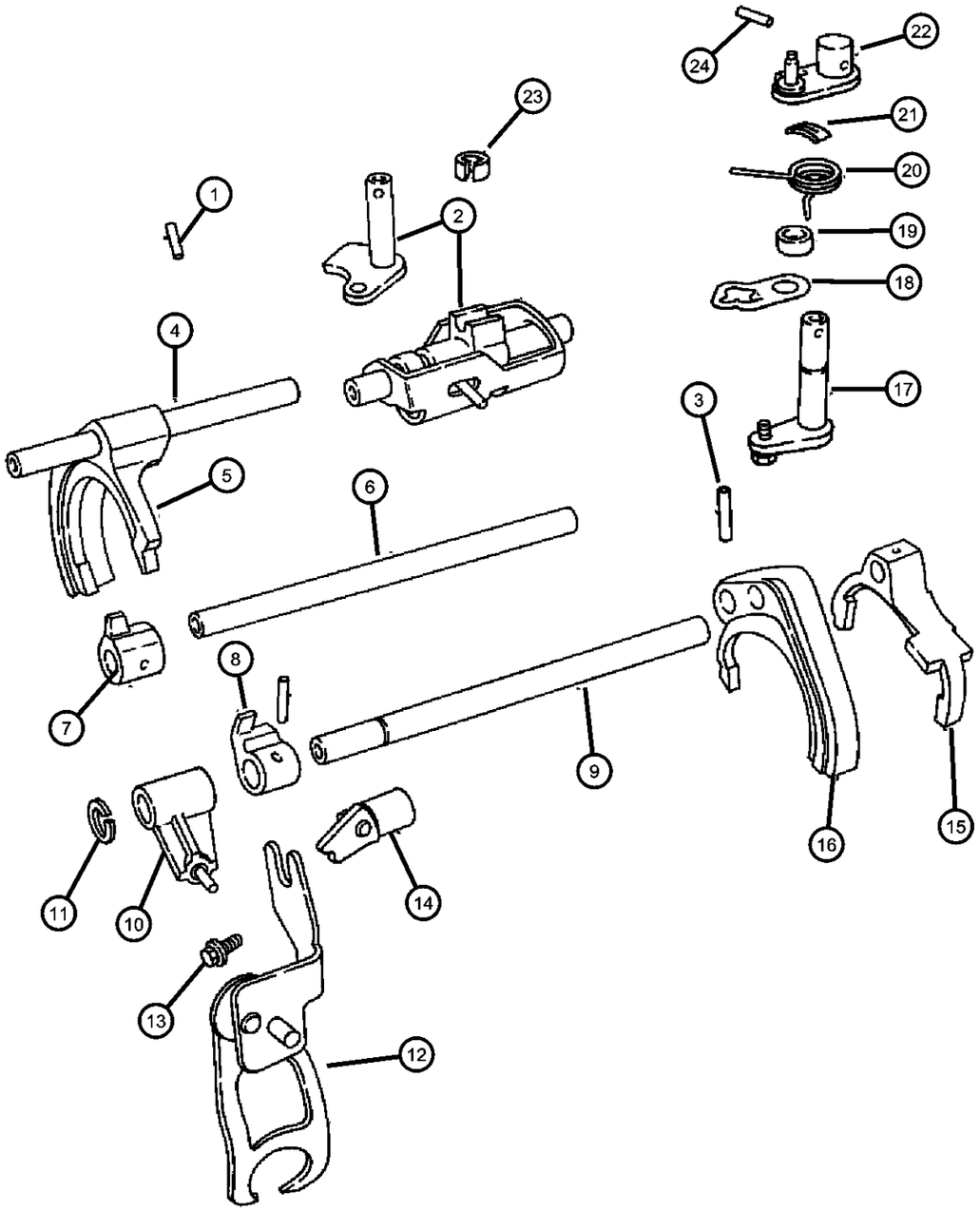

ITEM	PART NUMBER	QTY	LINE	SERIES	BODY	ENGINE	TRANS	TRIM	DESCRIPTION
11									SNAP RING
	06501862	1	J, U			ED3	DD7		
		1	T			ED3	DD7		
12									BRACKET, Reverse Shift Rod
	04761152	1	J, U			ED3	DD7		
		1	T			ED3	DD7		
13									SCREW, Reverse Bracket
	04761153	2	J, U			ED3	DD7		
		2	T			ED3	DD7		
14									CAM, Reverse Block
	04761154	1	J, U			ED3	DD7		
		1	T			ED3	DD7		
15									FORK, Fifth and Reverse
	05191024AA	1	J, U			ED3	DD7		
		1	T			ED3	DD7		
16									LUG, Third and Fourth Shift
	04761179	1	J, U			ED3	DD7		Includes:[3-4] Fork
		1	T			ED3	DD7		Includes:[3-4] Fork
17									LEVER, Crossover
	04761147	1	J, U			ED3	DD7		
		1	T			ED3	DD7		
18									PLATE, Crossover Stop
	04761148	1	J, U			ED3	DD7		
		1	T			ED3	DD7		
19									SPACER, Inner Crossover Lever
	04761151	1	J, U			ED3	DD7		
		1	T			ED3	DD7		
20									SPRING, Crossover Lever
	04761149	1	J, U			ED3	DD7		
		1	T			ED3	DD7		
21									RETAINER, Spring
	04761150	1	J, U			ED3	DD7		

COMPASS/PATRIOT (MK)

SERIES	LINE	BODY	ENGINE	TRANSMISSION
H = HIGHLINE L = LOWLINE P = PREMIUM	J = JEEP - 4WD T = JEEP - 2WD	49 = HATCHBACK TYPE #2 74 = SPORT UTILITY 4-DR TYPE #4	ED3 = 2.4L 4 Cyl DOHC 16V Dual VVT Engine	DD7 = 5-Speed Manual T355 Transmission DEF = 6-Speed Manual Aisin BG6 Trans DAV = Continuously Variable Transmission DAW = Cont.Var. w/Off-Rd Crawl Ratio Trans

Fork & Rails
Figure T355-910

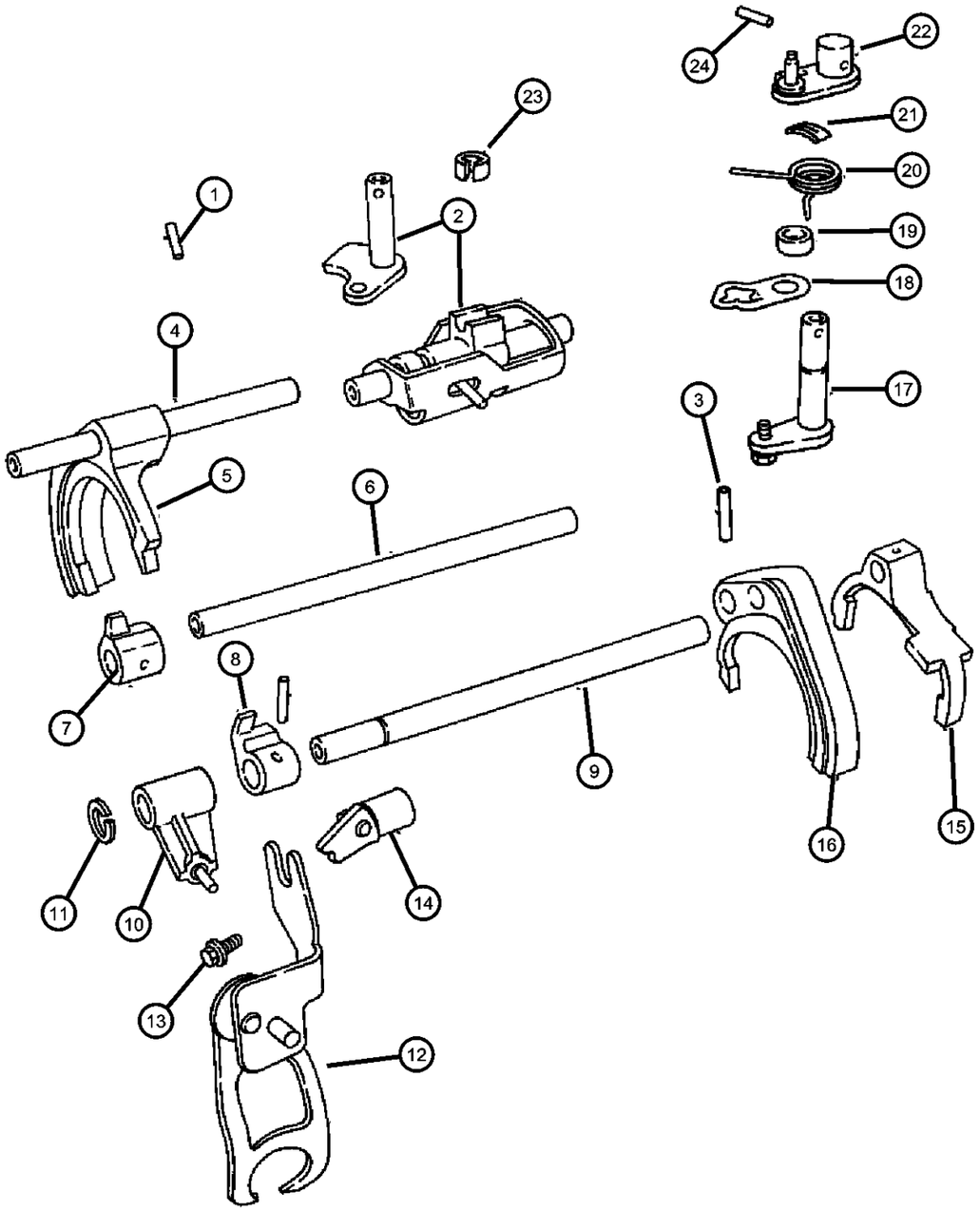

ITEM	PART NUMBER	QTY	LINE	SERIES	BODY	ENGINE	TRANS	TRIM	DESCRIPTION
		1	T			ED3	DD7		
22									LEVER, Crossover
	05189983AA	1	J, U			ED3	DD7		
		1	T			ED3	DD7		
23									CLIP, Detent Shaft
	04761158	2	J, U			ED3	DD7		
		2	T			ED3	DD7		
24									PIN, Shift Shaft
	04778249	1	J, U			ED3	DD7		
		1	T			ED3	DD7		

COMPASS/PATRIOT (MK)

SERIES	LINE	BODY	ENGINE	TRANSMISSION
H = HIGHLINE L = LOWLINE P = PREMIUM	J = JEEP - 4WD T = JEEP - 2WD	49 = HATCHBACK TYPE #2 74 = SPORT UTILITY 4-DR TYPE #4	ED3 = 2.4L 4 Cyl DOHC 16V Dual VVT Engine	DD7 = 5-Speed Manual T355 Transmission DEF = 6-Speed Manual Aisin BG6 Trans DAV = Continuously Variable Transmission DAW = Cont.Var. w/Off-Rd Crawl Ratio Trans

Gearshift Control
Figure T355-1210

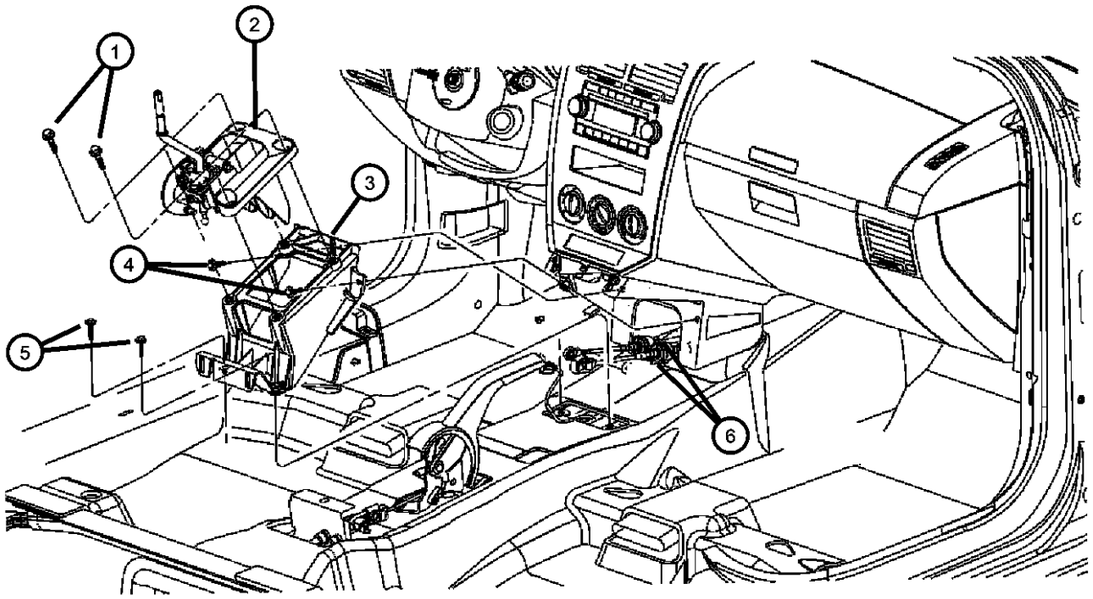

ITEM	PART NUMBER	QTY	LINE	SERIES	BODY	ENGINE	TRANS	TRIM	DESCRIPTION
NOTE:									
Sales Codes:									
[DD7]=5 Speed Manual Transmission - [T355]									
1	06104392AA	4	J, T, U				DD7, DEF		BOLT AND WASHER
2	05106040AA	1	J, T, U			ED3	DD7		SHIFTER, Transmission
3	05291763AB	1	J, T, U				DD7, DEF		BRACKET, Gearshift
4	06105099AA	2	J, T, U						SCREW
5	06105099AA	2	J, T, U						SCREW
6	05062056AC	1	J, T, U				DD7		CABLE, Gearshift Control
-7	68018106AA	4	J, T, U				DD7		CLIP, Retainer

COMPASS/PATRIOT (MK)

SERIES	LINE	BODY	ENGINE	TRANSMISSION
H = HIGHLINE L = LOWLINE P = PREMIUM	J = JEEP - 4WD T = JEEP - 2WD	49 = HATCHBACK TYPE #2 74 = SPORT UTILITY 4-DR TYPE #4	ED3 = 2.4L 4 Cyl DOHC 16V Dual VVT Engine	DD7 = 5-Speed Manual T355 Transmission DEF = 6-Speed Manual Aisin BG6 Trans DAV = Continuously Variable Transmission DAW = Cont.Var. w/Off-Rd Crawl Ratio Trans

AR = use ase required - = Non illustrrated part

Shift Knob & Bezel
Figure T355-1220

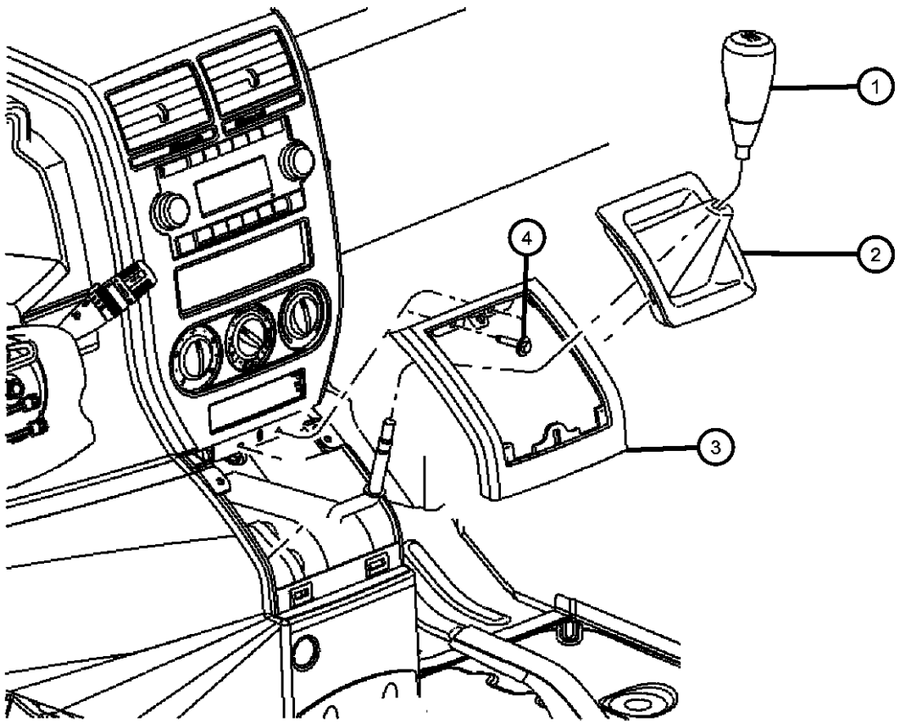

ITEM	PART NUMBER	QTY	LINE	SERIES	BODY	ENGINE	TRANS	TRIM	DESCRIPTION
1	05273342AB	1					DD7		KNOB, Gearshift
2	05273434AB	1					DD7		BOOT, Gearshift
3	0YZ99DSFAA	1	J, T, U				DD7, DEF		BEZEL, Console Shifter
4	06105099AA	2	J, T, U						SCREW

COMPASS/PATRIOT (MK)

SERIES	LINE	BODY	ENGINE	TRANSMISSION
H = HIGHLINE L = LOWLINE P = PREMIUM	J = JEEP - 4WD T = JEEP - 2WD	49 = HATCHBACK TYPE #2 74 = SPORT UTILITY 4-DR TYPE #4	ED3 = 2.4L 4 Cyl DOHC 16V Dual VVT Engine	DD7 = 5-Speed Manual T355 Transmission DEF = 6-Speed Manual Aisin BG6 Trans DAV = Continuously Variable Transmission DAW = Cont.Var. w/Off-Rd Crawl Ratio Trans

Cable To Transaxle
Figure T355-1230

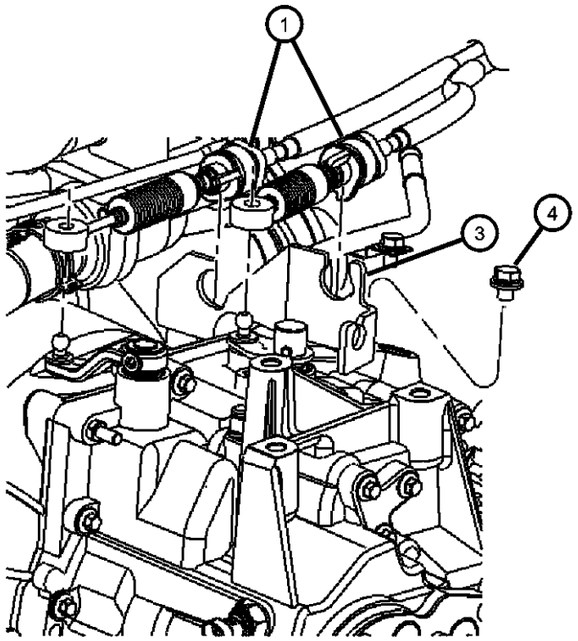

ITEM	PART NUMBER	QTY	LINE	SERIES	BODY	ENGINE	TRANS	TRIM	DESCRIPTION
NOTE:									
Sales Codes:									
[DD7]=5 Speed Manual Transmission - [T355]									
1	05062056AC	1	J, T, U				DD7		CABLE, Gearshift Control
-2	68018106AA	4	J, T, U				DD7		CLIP, Retainer
3									BRACKET, Transmission Control Cable
	05189848AA	1	J, U			ED3	DD7		
		1	T			ED3	DD7		
4									BOLT
	05189849AA	1	J, U			ED3	DD7		
		3	T			ED3	DD7		

COMPASS/PATRIOT (MK)

SERIES	LINE	BODY	ENGINE	TRANSMISSION
H = HIGHLINE L = LOWLINE P = PREMIUM	J = JEEP - 4WD T = JEEP - 2WD	49 = HATCHBACK TYPE #2 74 = SPORT UTILITY 4-DR TYPE #4	ED3 = 2.4L 4 Cyl DOHC 16V Dual VVT Engine	DD7 = 5-Speed Manual T355 Transmission DEF = 6-Speed Manual Aisin BG6 Trans DAV = Continuously Variable Transmission DAW = Cont.Var. w/Off-Rd Crawl Ratio Trans

Group - 88

Power Transfer Unit AWD

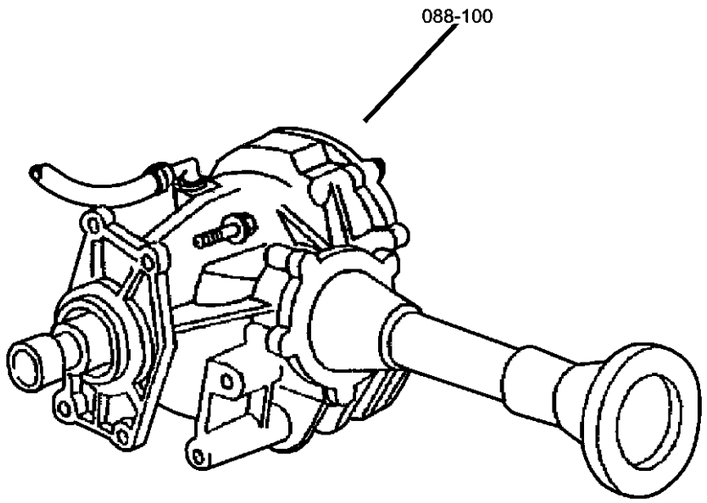

088-100 Power Transfer Assembly and Mounting 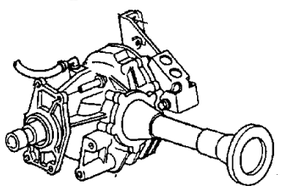			

Group - 88 Power Transfer Unit AWD

Illustration Title — Group-Fig. No.

Power Transfer Assembly and Mounting

Power Transfer Unit ..... Fig. 88 - 110

Power Transfer Unit
Figure 88-110

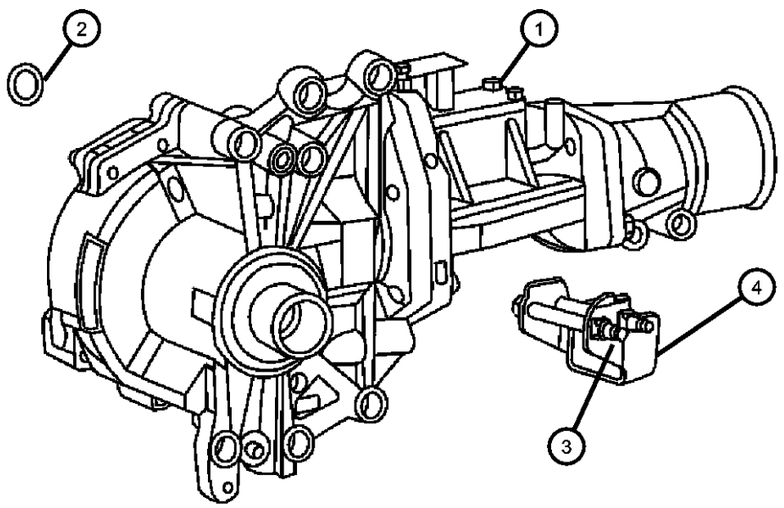

ITEM	PART NUMBER	QTY	LINE	SERIES	BODY	ENGINE	TRANS	TRIM	DESCRIPTION
1	3200A067	1							POWER TRANSFER UNIT, See Note:
2	05105704AA	1							SEAL, Transfer Case
3	06105073AA	2							SCREW
4	05273367AA	1							DAMPER, Transfer Case
-5	68005250AA	1							EXTENSION HOUSING, PTU
-6	68005258AA	1							GUARD, GUARD-DUST SEAL
-7	68005260AA	1							SEAL, Extension
-8	68005261AA	1							O-RING, Extension
-9	68005263AA	1							SEAL, HALFSHAFT
-10	68005264AA	1							PLUG, Oil Fill
-11	68005265AA	1							PLUG, Oil Drain
-12	68005267AA	1							SEAL, Transfer Case

COMPASS/PATRIOT (MK)

SERIES	LINE	BODY	ENGINE	TRANSMISSION
H = HIGHLINE L = LOWLINE P = PREMIUM	J = JEEP - 4WD T = JEEP - 2WD	49 = HATCHBACK TYPE #2 74 = SPORT UTILITY 4-DR TYPE #4	ED3 = 2.4L 4 Cyl DOHC 16V Dual VVT Engine	DD7 = 5-Speed Manual T355 Transmission DEF = 6-Speed Manual Aisin BG6 Trans DAV = Continuously Variable Transmission DAW = Cont.Var. w/Off-Rd Crawl Ratio Trans

Group - 22

Wheels, Covers and Jacks

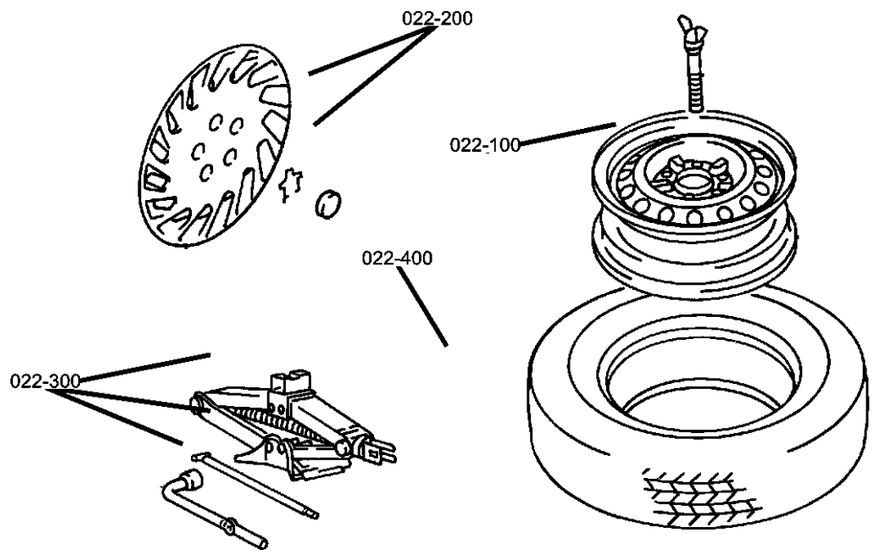

022-100 Wheels and Hardware	022-200 Wheel Covers and Center Caps	022-300 Jack Stowage	
	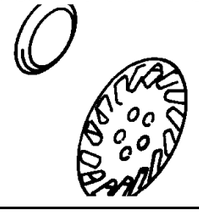	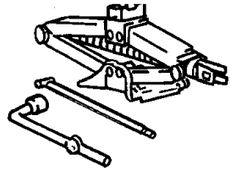	

Group - 22 Wheels, Covers and Jacks

Illustration Title — Group-Fig. No.

Wheels and Hardware
Wheels and Hardware ..... Fig. 22 - 110

Wheel Covers and Center Caps
Caps ..... Fig. 22 - 210

Jack Stowage
Jack Stowage and Spare Tire ..... Fig. 22 - 310

Wheels and Hardware
Figure 22-110

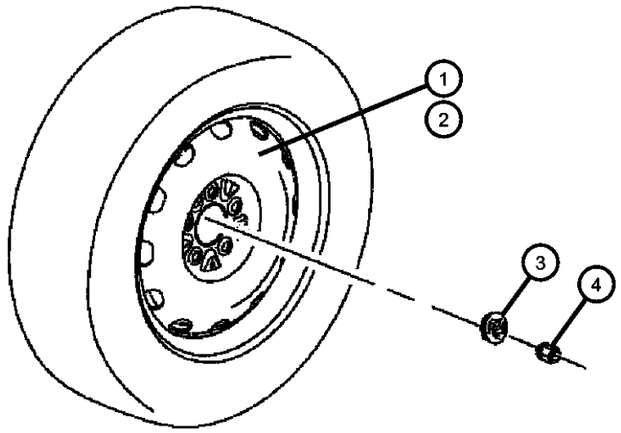

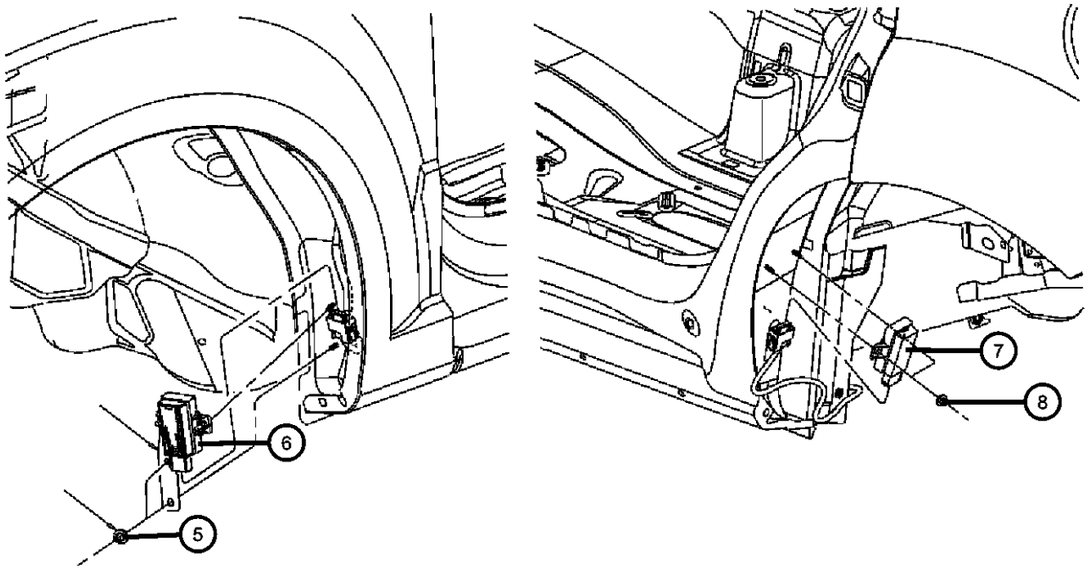

ITEM	PART NUMBER	QTY	LINE	SERIES	BODY	ENGINE	TRANS	TRIM	DESCRIPTION
NOTE: Sales Codes: [TBB] = Full Size Spare Tire [TBC] = Compact Spare Tire [WFS] = 17X6.5 Aluminum Sparkle Silver Wheel [WPP] = 18X8.0 Aluminum Chrome Clad Wheel [WPW] = 18X7.0 Aluminum Wheel [X88] = Tire and Wheel Parts Module									
1									WHEEL, Steel
	05105032AA	1							[TBB+X88]
	05105078AA	1	J, T, U		74				[WDJ+TBB]
	05105079AA	1							[TBC+X88]
	0YX87S4AAA	4	J, T, U		49, 74				[WDJ]
2									WHEEL, Aluminum
	05105473AA	4							[WPP+X88]
	0YX88MA8AB	4	J, T, U		49, 74				[WFJ]
	1AR01PAKAA	4							[WPW+X88]
	1CT67PAKAA	4							[WFS+X88]
3									CAP, Wheel Center
	5HT59MA8AB	4	J, T, U		49, 74				[WFJ]
	5HT59PAKAB	4	J, T, U		49, 74				[WFS]
	52090402AA	4							[WPW]
	5HT59SZ0AB	4	J, T, U		49, 74				[WPP]
4	06502738	20							NUT, Wheel, M12x1.5
5	06104911AA	2							NUT, Hex, Trigger Module to Body Side Aperature
6	05033334AA	1							MODULE, Tire PressureFront Left
7	56053034AC	2	J, T, U		49, 74				MODULE, Low Tire Pressure Warning
8	06104911AA	4							NUT, Hex, Trigger Module to Wheel House Center
-9	05056245AA	1	J, T, U		49, 74				LABEL, Tire Pressure
-10	56053030AB	4							SENSOR, Tire Pressure, Valve stem, See Sensors Group 008
-11									HARDWARE KIT, Mounting, See Sensors Group 008

COMPASS/PATRIOT (MK)

SERIES	LINE	BODY	ENGINE	TRANSMISSION
H = HIGHLINE L = LOWLINE P = PREMIUM	J = JEEP - 4WD T = JEEP - 2WD	49 = HATCHBACK TYPE #2 74 = SPORT UTILITY 4-DR TYPE #4	ED3 = 2.4L 4 Cyl DOHC 16V Dual VVT Engine	DD7 = 5-Speed Manual T355 Transmission DEF = 6-Speed Manual Aisin BG6 Trans DAV = Continuously Variable Transmission DAW = Cont.Var. w/Off-Rd Crawl Ratio Trans

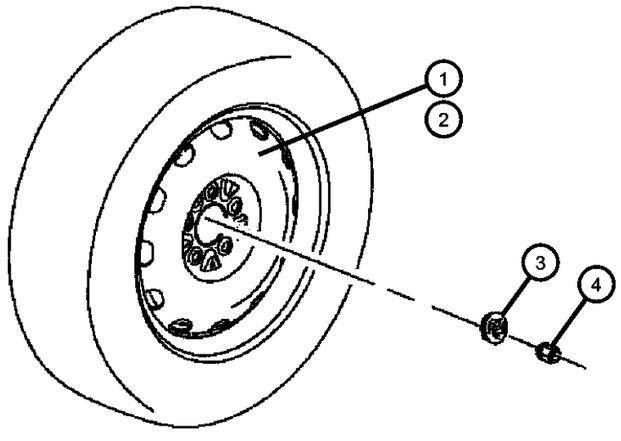

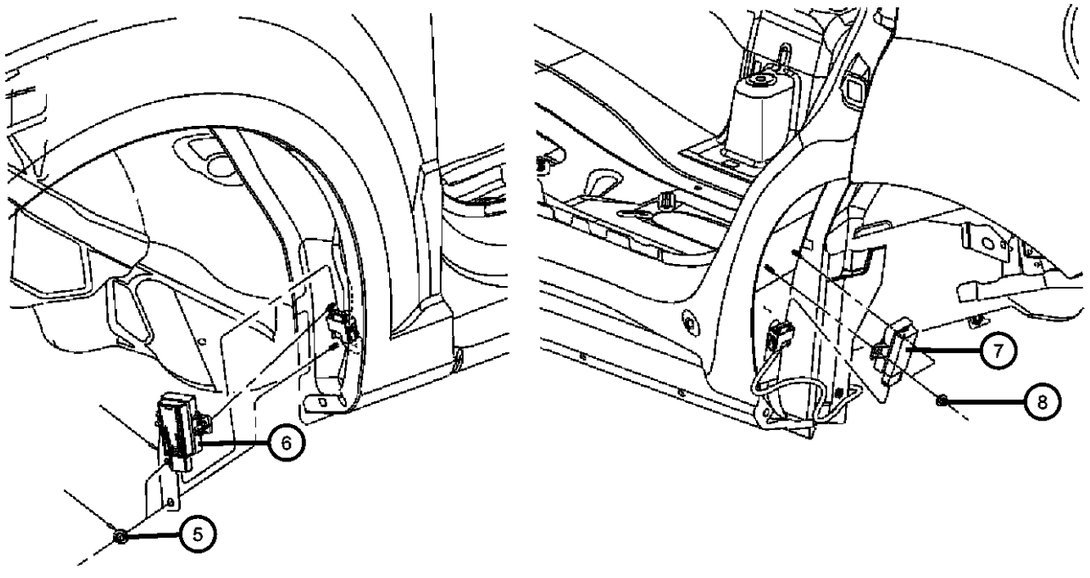

ITEM	PART NUMBER	QTY	LINE	SERIES	BODY	ENGINE	TRANS	TRIM	DESCRIPTION
	68001743AA	4	J, T, U		49, 74				Contains: 1-S120120001 Nut TPM Retaining,1-S122990001 Washer,Seal ,1-S122140001 Cap,Valve Stem,Black,Euro,1-S120121001,Cap,Valve Stem,Grey,Domestic,1-S122988001,Seal,TPM to Wheel 1-S122914 Valve Core
	68001744AA	4	J, T, U		49, 74				Contains: 1-S122914001,Valve Core,TPM,1-S120121001,Cap,Valve Stem,Grey,Domes-tic,1-S122140001,Cap,Valve Stem,Black,Euro
-12	68001698AA	4	J, T, U		49, 74				SENSOR PACKAGE, Tire Pressure, See Sensors Group 008, Contains: Sensor,Nut,1-Grey Cap,1-Black Cap,1-Valve Stem
-13	68024258AA	4	J, T, U		49, 74				CAP KIT, Valve Stem, Grey, [TBH] Contains: Cap,Valve Stem,Grey,Qty.5
-14	68024257AA	4	J, T, U		49, 74				CAP KIT, Valve Stem, Black, BUX, [TVG] Contains: Cap,Valve Stem,Black,Qty.5
-15	05105834AA	1	J, T, U		49, 74				LOCK SET, Wheel

COMPASS/PATRIOT (MK)

SERIES	LINE	BODY	ENGINE	TRANSMISSION
H = HIGHLINE L = LOWLINE P = PREMIUM	J = JEEP - 4WD T = JEEP - 2WD	49 = HATCHBACK TYPE #2 74 = SPORT UTILITY 4-DR TYPE #4	ED3 = 2.4L 4 Cyl DOHC 16V Dual VVT Engine	DD7 = 5-Speed Manual T355 Transmission DEF = 6-Speed Manual Aisin BG6 Trans DAV = Continuously Variable Transmission DAW = Cont.Var. w/Off-Rd Crawl Ratio Trans

Caps
Figure 22-210

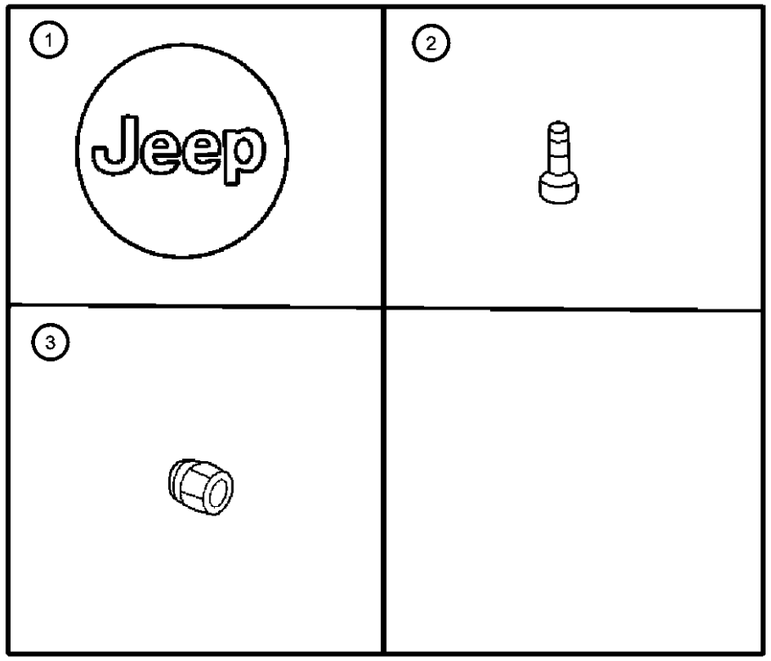

ITEM	PART NUMBER	QTY	LINE	SERIES	BODY	ENGINE	TRANS	TRIM	DESCRIPTION
NOTE: Sales Codes: [WDJ] = 16x6.5 Styled Steel Wheel [WFS] = 17X6.5 Aluminum Sparkle Silver Wheel [WPP] = 18X8.0 Aluminum Chrome Clad Wheel [WPW] = 18X7.0 Aluminum Wheel [XGM] = Tire Pressure Monitoring Display [X88] = Tire and Wheel Parts Module									
1									CAP, Wheel Center
	0YX93S4AAA	4	J, T, U		49, 74				[WDJ]
	52090401AA	4							[WPP]
	52090402AA	4							[WPW]
	5HT59MA8AB	4	J, T, U		49, 74				[WFJ]
	5HT59PAKAB	4	J, T, U		49, 74				[WFS]
2	02073355	1							STEM, Wheel Valve
3	06502738	20							NUT, Wheel, M12x1.5
-4	68001696AA	4	J, T, U		49, 74				SENSOR PACKAGE, Tire Pressure, See Electrical Group 008, Contains: 1-Gray Cap, 1-Black Cap, 1- Valve Stem,Sensor & Nut

COMPASS/PATRIOT (MK)

SERIES	LINE	BODY	ENGINE	TRANSMISSION
H = HIGHLINE L = LOWLINE P = PREMIUM	J = JEEP - 4WD T = JEEP - 2WD	49 = HATCHBACK TYPE #2 74 = SPORT UTILITY 4-DR TYPE #4	ED3 = 2.4L 4 Cyl DOHC 16V Dual VVT Engine	DD7 = 5-Speed Manual T355 Transmission DEF = 6-Speed Manual Aisin BG6 Trans DAV = Continuously Variable Transmission DAW = Cont.Var. w/Off-Rd Crawl Ratio Trans

Jack Stowage and Spare Tire
Figure 22-310

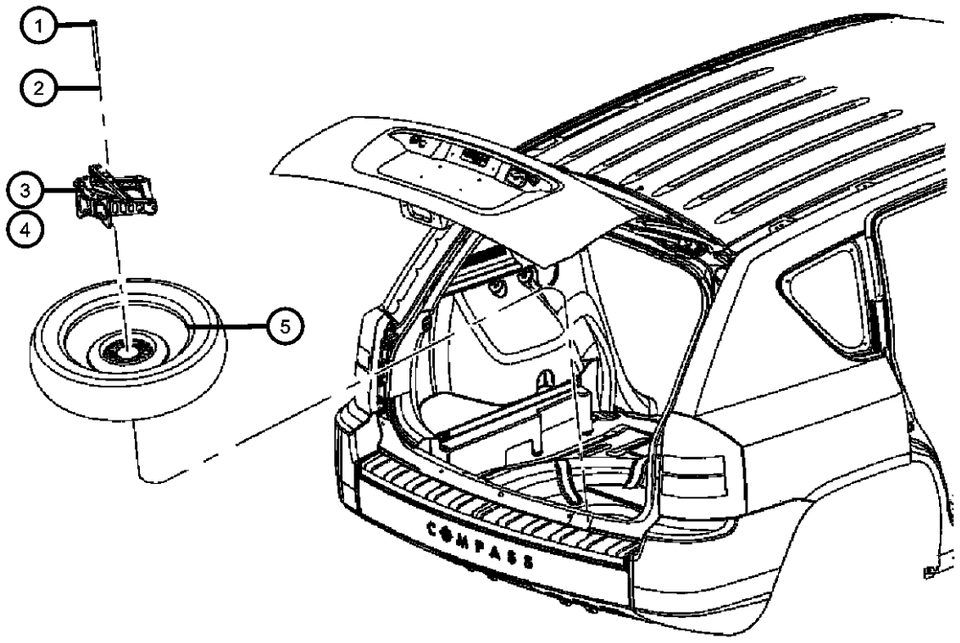

ITEM	PART NUMBER	QTY	LINE	SERIES	BODY	ENGINE	TRANS	TRIM	DESCRIPTION
NOTES: Sales Codes: [TBB] = Full Size Spare Tire [TBC] = Compact Spare Tire									
1	05105837AA	1	J		49				HOLD DOWN, Spare Tire, Wheel to Floor
2	05105525AC	1							HOLD DOWN, Spare Tire, Wheel to Floor (Handle}
3	04772483AE	1							WRENCH, Wheel Lug Nut
4	05191333AA	1							JACK
5									WHEEL, Steel
	05105032AA	1							[TBB] Full Size Spare
	05105079AA	1							[TBC] Compact Spare Tire

COMPASS/PATRIOT (MK)

SERIES	LINE	BODY	ENGINE	TRANSMISSION
H = HIGHLINE L = LOWLINE P = PREMIUM	J = JEEP - 4WD T = JEEP - 2WD	49 = HATCHBACK TYPE #2 74 = SPORT UTILITY 4-DR TYPE #4	ED3 = 2.4L 4 Cyl DOHC 16V Dual VVT Engine	DD7 = 5-Speed Manual T355 Transmission DEF = 6-Speed Manual Aisin BG6 Trans DAV = Continuously Variable Transmission DAW = Cont.Var. w/Off-Rd Crawl Ratio Trans

Group - 23D

Wiper/Lock Cylinder and Keys

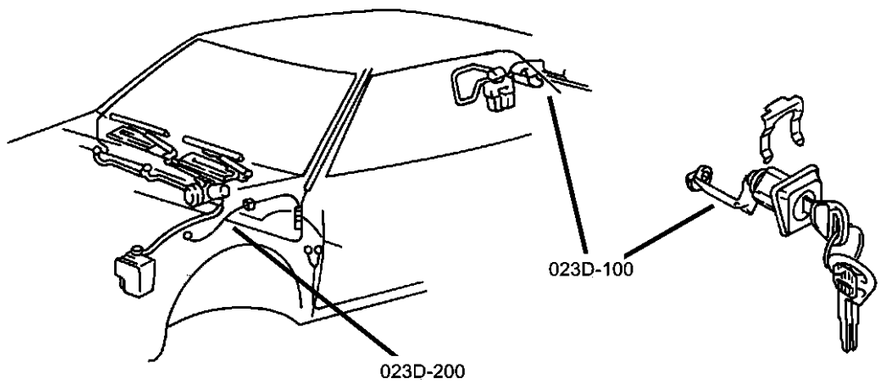

23D-100 Lock Cylinders and Keys 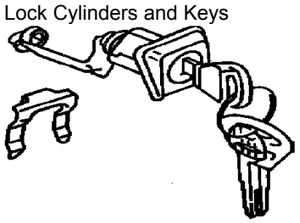	**23D-200** Windshield Wiper and Washer Systems 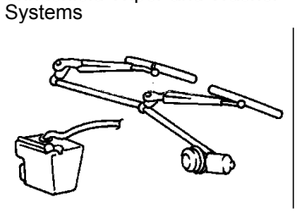		

Group - 23D Wiper/Lock Cylinder and Keys

Illustration Title — Group-Fig. No.

Lock Cylinders and Keys
Lock Cylinder And Keys ..... Fig. 23D - 110

Windshield Wiper and Washer Systems
Windshield Wiper And Washer ..... Fig. 23D - 210
Rear Wiper ..... Fig. 23D - 220

Lock Cylinder And Keys
Figure 23D-110

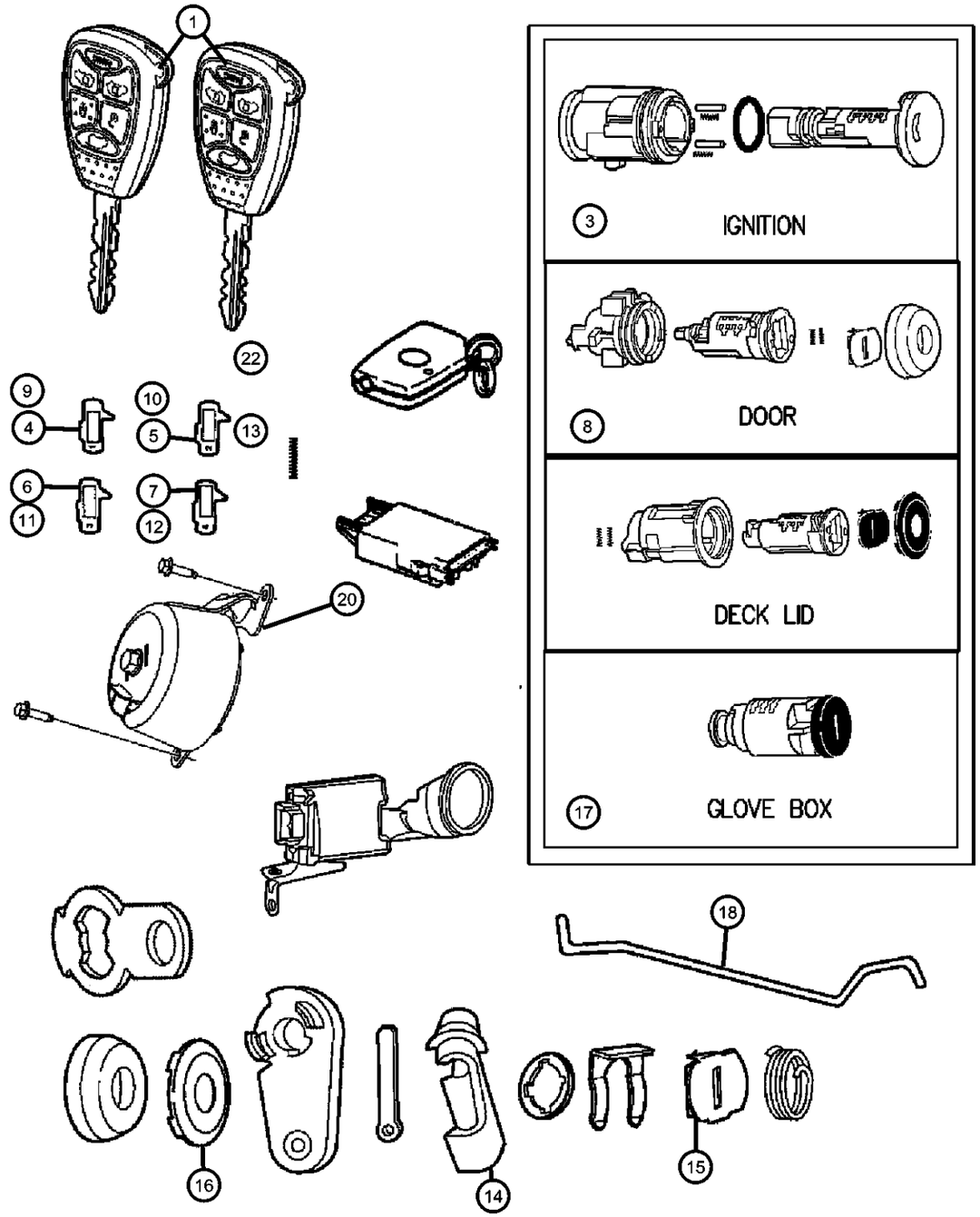

ITEM	PART NUMBER	QTY	LINE	SERIES	BODY	ENGINE	TRANS	TRIM	DESCRIPTION
1	05143553AA	1							KEY, Master Jeep Sentry
-2									KEY, BLANK WITH TRANSMIT-TER
	68000603AA	1							
	68001699AA	2	J, T, U		49, 74				
3	05179511AA	1							CYLINDER, Ignition Lock
4	05257132AB	1	J, T, U		49, 74				TUMBLER, Number 1, FUEL TANK LOCKING Fuel Cap
5	05257133AB	1	J, T, U		49, 74				TUMBLER, Number 2, FUEL TANK LOCKING
6	05257134AB	1	J, T, U		49, 74				TUMBLER, Number 3, FUEL TANK LOCKING
7	05257135AB	1	J, T, U		49, 74				TUMBLER, Number 4, FUEL TANK LOCKING
8	05139099AA	1							CYLINDER, Door Lock
9	04778117AB	1	J, T, U		49, 74				TUMBLER, Door and Deck Number 1, Wide
10	04778118AB	1	J, T, U		49, 74				TUMBLER, Door and Deck Number 2, Wide
11	04778119AB	1	J, T, U		49, 74				TUMBLER, Door and Deck Number 3, Wide
12	04778120AB	1	J, T, U		49, 74				TUMBLER, Door and Deck Number 4, Wide
13	04778121	1	J, T, U		49, 74				SPRING, Door and Deck Tumbler
14	05191981AA	1	J, T, U		49, 74				CLIP, Latch
15	05019605AA	1	J, T, U		49, 74				SHUTTER, Lock Cylinder
16	05191982AA	1							CAP, Liftgate Lock Cylinder
17	05191982AA	1							CYLINDER, Glove Box Lock, (NOT SERVICED)
18									LINK, KEY CYLINDER TO LATCH, Front Door
	05115820AA	1	J, T, U		49				LHD
	05115821AA	1	J, T, U		49				
-19									BATTERY, Transmitter
	05066241AA	1	J, T, U		49, 74				
	04636141	1			49				W/o RKE and W/o Remote Start
	05140773AA	1							Remote Start (3V)
20	04692034AB	1							SIREN, Alarm, Export Security Alarm
-21	06104725AA	2							NUT AND WASHER, M6x1

COMPASS/PATRIOT (MK)

SERIES	LINE	BODY	ENGINE	TRANSMISSION
H = HIGHLINE L = LOWLINE P = PREMIUM	J = JEEP - 4WD T = JEEP - 2WD	49 = HATCHBACK TYPE #2 74 = SPORT UTILITY 4-DR TYPE #4	ED3 = 2.4L 4 Cyl DOHC 16V Dual VVT Engine	DD7 = 5-Speed Manual T355 Transmission DEF = 6-Speed Manual Aisin BG6 Trans DAV = Continuously Variable Transmission DAW = Cont.Var. w/Off-Rd Crawl Ratio Trans

AR = use ase required - = Non illustrrated part

Lock Cylinder And Keys
Figure 23D-110

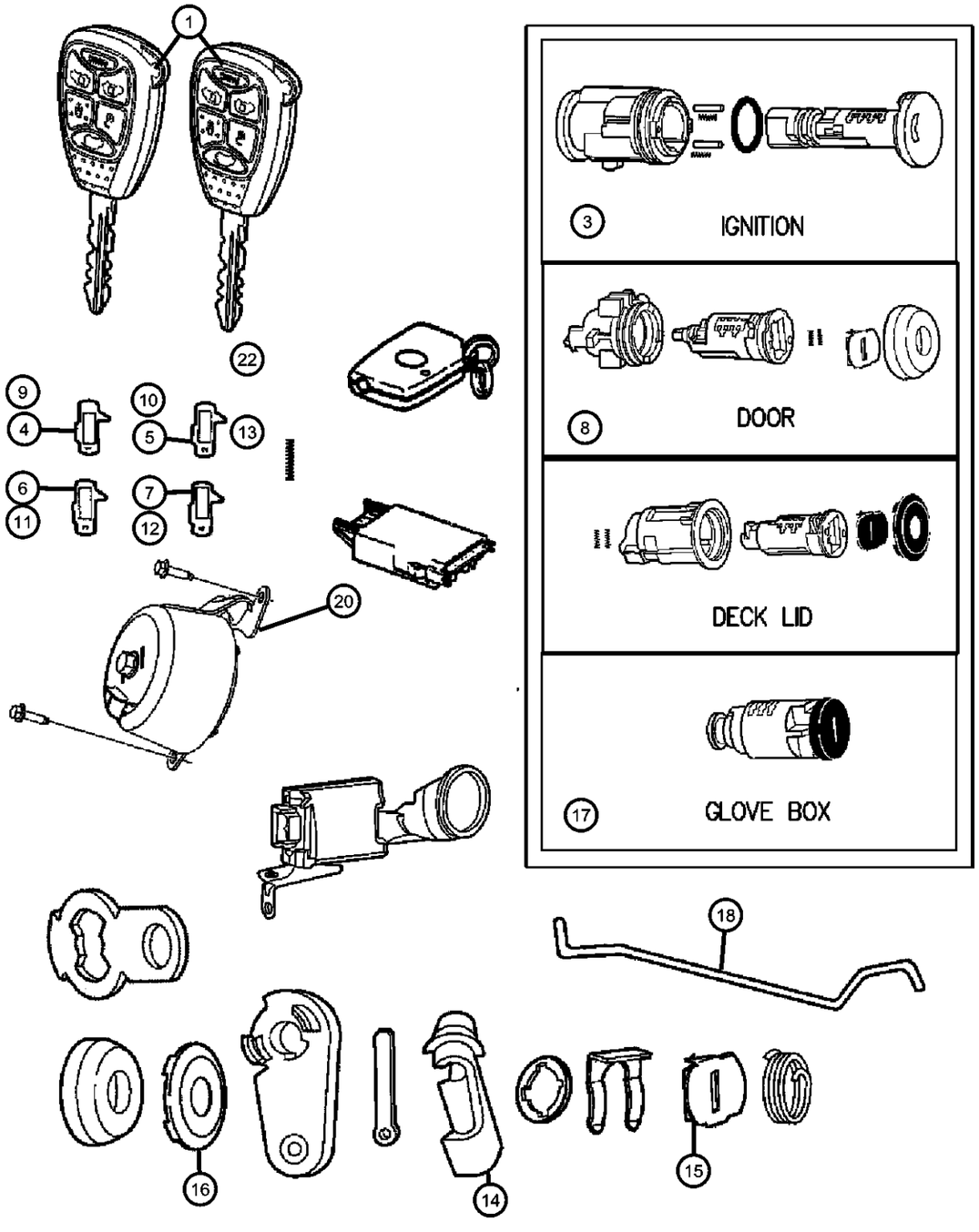

ITEM	PART NUMBER	QTY	LINE	SERIES	BODY	ENGINE	TRANS	TRIM	DESCRIPTION
22	04746873	1	J, T, U		49, 74				SPRING, Lock Cylinder Tumbler
-23	05170485AA	1							CLIP, Latch Rod
-24									LEVER, Sliding DoorLock Cylinder
	05191978AA	1							
	05191983AA	1							Lifgate

COMPASS/PATRIOT (MK)

SERIES	LINE	BODY	ENGINE	TRANSMISSION
H = HIGHLINE L = LOWLINE P = PREMIUM	J = JEEP - 4WD T = JEEP - 2WD	49 = HATCHBACK TYPE #2 74 = SPORT UTILITY 4-DR TYPE #4	ED3 = 2.4L 4 Cyl DOHC 16V Dual VVT Engine	DD7 = 5-Speed Manual T355 Transmission DEF = 6-Speed Manual Aisin BG6 Trans DAV = Continuously Variable Transmission DAW = Cont.Var. w/Off-Rd Crawl Ratio Trans

Windshield Wiper And Washer
Figure 23D-210

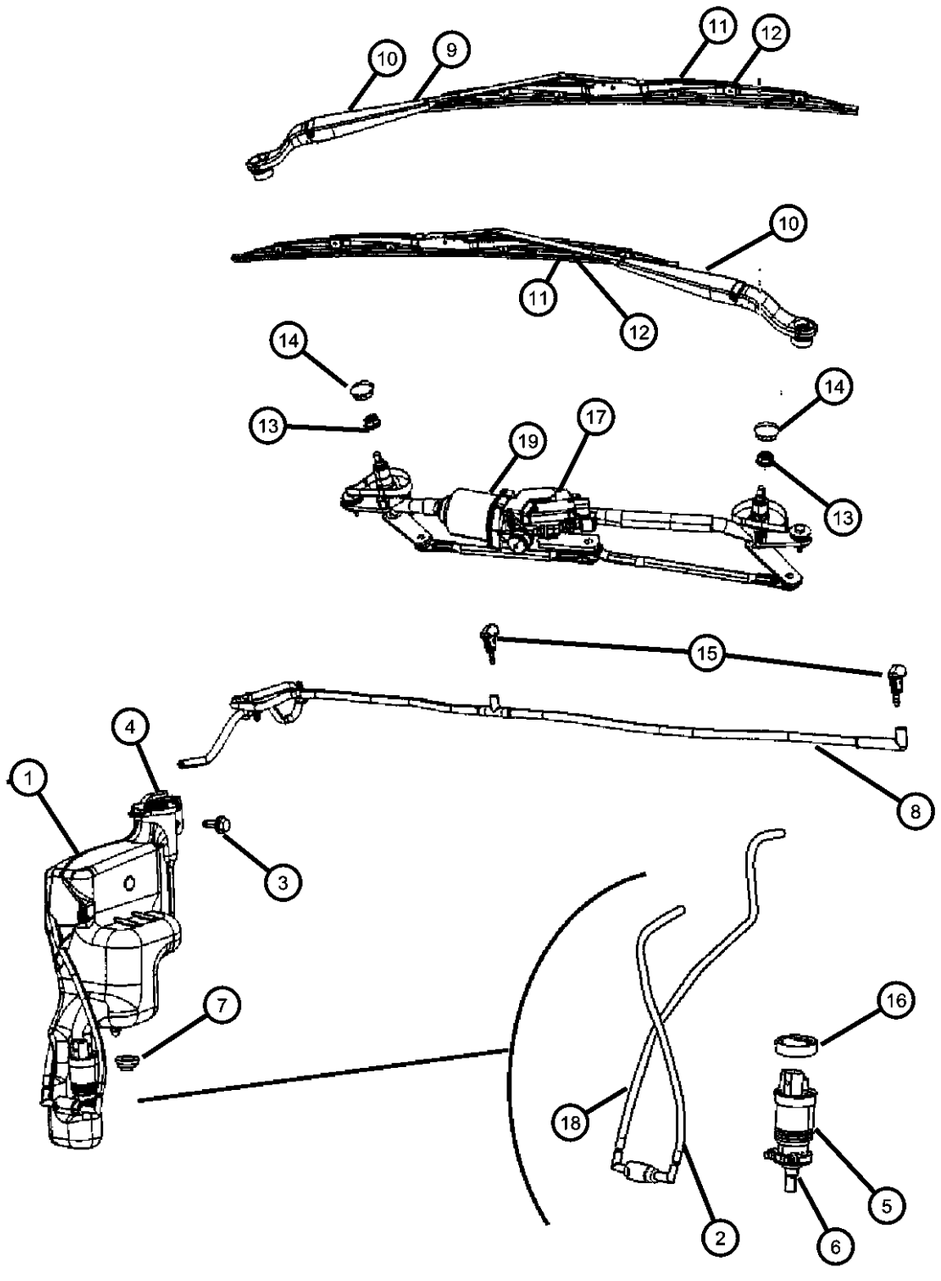

ITEM	PART NUMBER	QTY	LINE	SERIES	BODY	ENGINE	TRANS	TRIM	DESCRIPTION
1	05189350AA	1							RESERVOIR, Windshield Washer
2	05189353AA	1							HOSE, Washer Reservoir
3	06104386AA	1							SCREW, M8x1.25x25, Tapping, Hex Head
4	05189351AA	1							CAP, Washer Reservoir
5	05179153AA	1							PUMP PACKAGE, Windshield Washer
6	05152030AA	1							GROMMET, Windshield Washer Pump
7	05189352AA	1							GROMMET, Washer Reservoir
8	05303837AB	1	J, T, U		49				HOSE, Windshield Washer
9									ARM, Front Wiper, Driver
	68002027AA	1	J, T		49				
	68003730AA	1	U		74				
	68003737AA	1	J, T		74				
	68003742AA	1	U		49				
10									ARM, Front Wiper, Passenger
	68002026AA	1	J, T		49				
	68003731AA	1	U		74				
	68003736AA	1	J, T		74				
	68003743AA	1	U		49				
11									BLADE, Front Wiper, Passenger
	68003733AA	1	U		74				
	68003738AA	1	J, T		74				
	WB000021AE								Mopar V-Line Alternative Part
	WBW00021AE								Mopar Alternative Winter Wiper Blades
	WBFLAT07AA								Mopar Alternative Flat Blade Set
	68003745AA	1	U		49				
	68002028AA	1	J, T		49				
	WB000020AE								Mopar V-Line Alternative Part
	WBW00020AD								Mopar Alternative Winter Wiper Blades
	WBFLAT17AA								Mopar Alternative Flat Blade Set
	WB-BLU020AA								Mopar Alternative Color Wiper Blade (Blue)

COMPASS/PATRIOT (MK)

SERIES	LINE	BODY	ENGINE	TRANSMISSION
H = HIGHLINE L = LOWLINE P = PREMIUM	J = JEEP - 4WD T = JEEP - 2WD	49 = HATCHBACK TYPE #2 74 = SPORT UTILITY 4-DR TYPE #4	ED3 = 2.4L 4 Cyl DOHC 16V Dual VVT Engine	DD7 = 5-Speed Manual T355 Transmission DEF = 6-Speed Manual Aisin BG6 Trans DAV = Continuously Variable Transmission DAW = Cont.Var. w/Off-Rd Crawl Ratio Trans

AR = use ase required - = Non illustrrated part

Windshield Wiper And Washer
Figure 23D-210

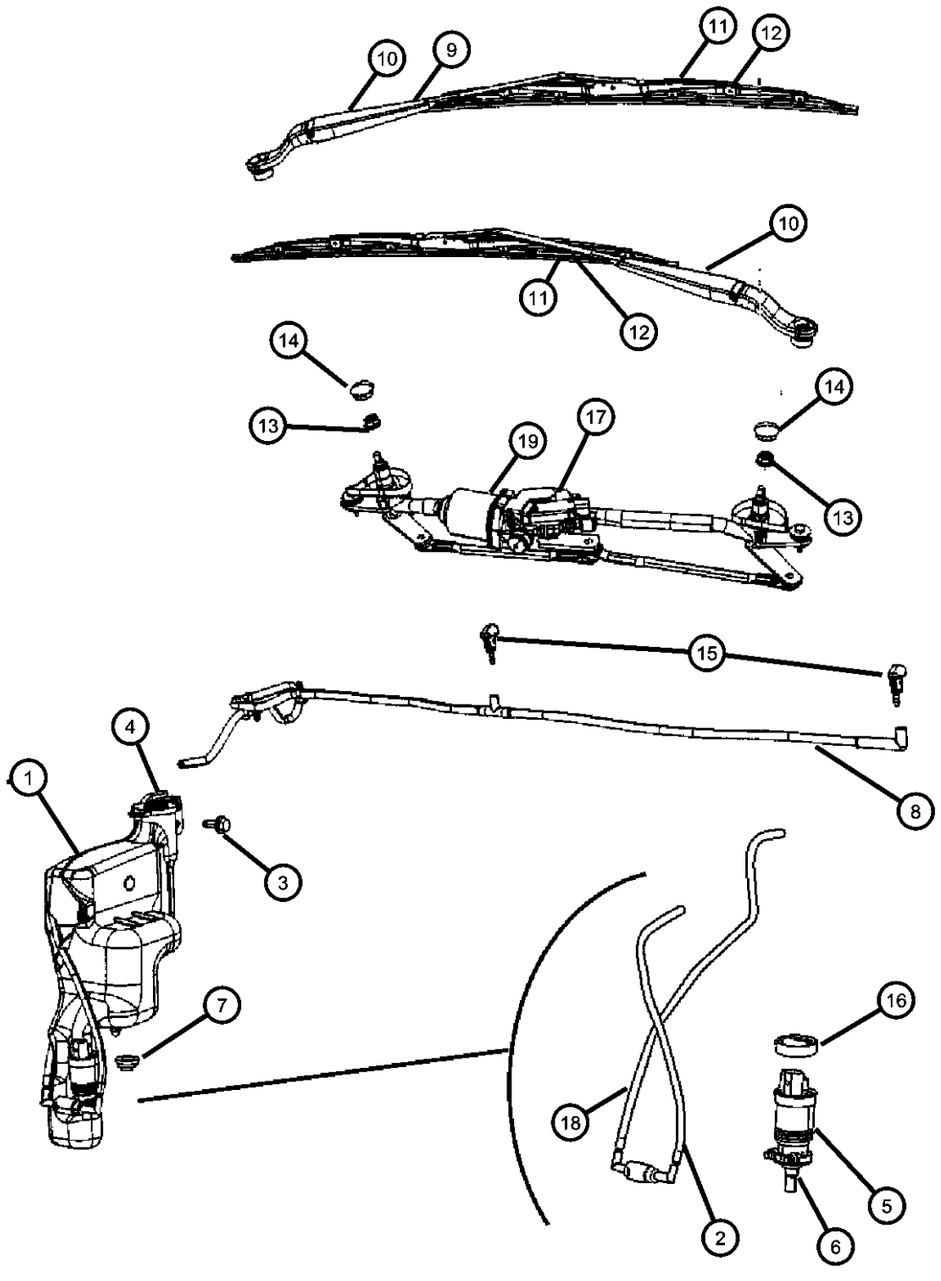

ITEM	PART NUMBER	QTY	LINE	SERIES	BODY	ENGINE	TRANS	TRIM	DESCRIPTION
	WBRED020AA								Mopar Alternative Color Wiper Blade (Red)
	WBYEL020AA								Mopar Alternative Color Wiper Blade (Yellow)
	WB-WHI020AA								Mopar Alternative Color Wiper Blade (White)
	WB-CAR020AA								Mopar Alternative Color Wiper Blade (Carbon Fiber)
12									BLADE, Front Wiper, Driver
	68002029AA	1	J, T		49				
	WB000022AE								Mopar V-Line Alternative Part
	WBW00022AD								Mopar Alternative Winter Wiper Blades
	WBFLAT17AA								Mopar Alternative Flat Blade Set
	WB-BLU022AA								Mopar Alternative Color Wiper Blade (Blue)
	WBRED022AA								Mopar Alternative Color Wiper Blade (Red)
	WBYEL022AA								Mopar Alternative Color Wiper Blade (Yellow)
	WB-WHI022AA								Mopar Alternative Color Wiper Blade (White)
	WB-CAR022AA								Mopar Alternative Color Wiper Blade (Carbon Fiber)
	68003732AA	1	U		74				
	68003739AA	1	J, T		74				
	WB000021AE								Mopar V-Line Alternative Part
	WBW00021AE								Mopar Alternative Winter Wiper Blades
	WBFLAT07AA								Mopar Alternative Flat Blade Set
	68003744AA	1	U		49				
13	06104709AA	2							NUT, M8
14	04389440	2							CAP, Wiper Arm Nut
15	05303833AA	2							NOZZLE, Windshield washer
16	05189355AA	1							RING, Locating, Windshield Washer Pump
17									MOTOR AND LINKAGE, Windshield wiper
	04879432AC	1	J, T		74				

COMPASS/PATRIOT (MK)

SERIES	LINE	BODY	ENGINE	TRANSMISSION
H = HIGHLINE L = LOWLINE P = PREMIUM	J = JEEP - 4WD T = JEEP - 2WD	49 = HATCHBACK TYPE #2 74 = SPORT UTILITY 4-DR TYPE #4	ED3 = 2.4L 4 Cyl DOHC 16V Dual VVT Engine	DD7 = 5-Speed Manual T355 Transmission DEF = 6-Speed Manual Aisin BG6 Trans DAV = Continuously Variable Transmission DAW = Cont.Var. w/Off-Rd Crawl Ratio Trans

AR = use ase required - = Non illustrrated part

Windshield Wiper And Washer
Figure 23D-210

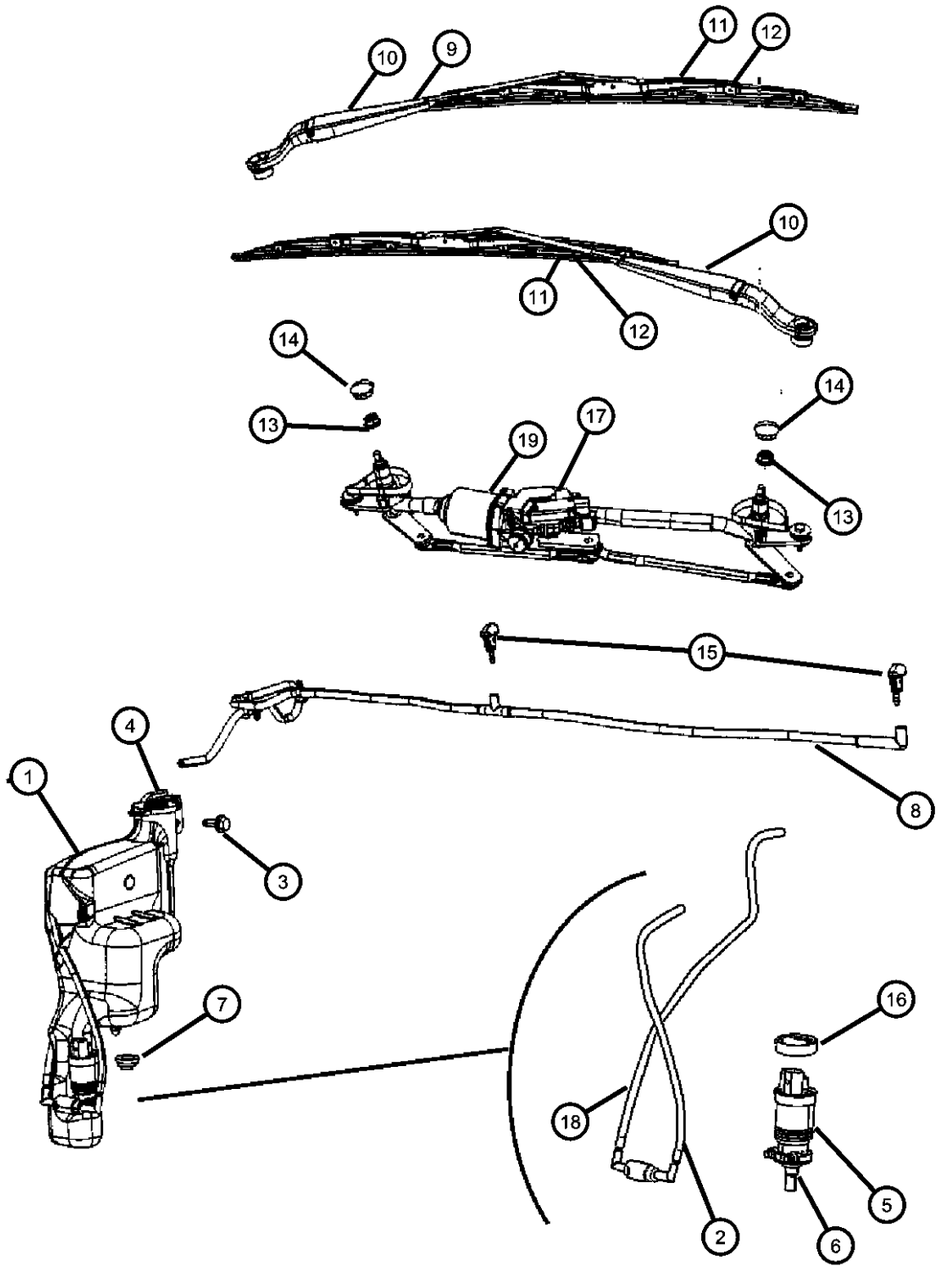

ITEM	PART NUMBER	QTY	LINE	SERIES	BODY	ENGINE	TRANS	TRIM	DESCRIPTION
	04879433AC	1	U		74				
	05303828AC	1	U		49				
	05303827AC	1	J, T		49				
18	05189354AA	1							HOSE, Washer Reservoir
19									MOTOR, Windshield wiper
	68002320AA	1	J, T		49				
	68003729AA	1	J, T		74				
	68003734AA	1	U		74				
	68003740AA	1	U		49				

COMPASS/PATRIOT (MK)

SERIES	LINE	BODY	ENGINE	TRANSMISSION
H = HIGHLINE L = LOWLINE P = PREMIUM	J = JEEP - 4WD T = JEEP - 2WD	49 = HATCHBACK TYPE #2 74 = SPORT UTILITY 4-DR TYPE #4	ED3 = 2.4L 4 Cyl DOHC 16V Dual VVT Engine	DD7 = 5-Speed Manual T355 Transmission DEF = 6-Speed Manual Aisin BG6 Trans DAV = Continuously Variable Transmission DAW = Cont.Var. w/Off-Rd Crawl Ratio Trans

AR = use ase required - = Non illustrrated part

Rear Wiper
Figure 23D-220

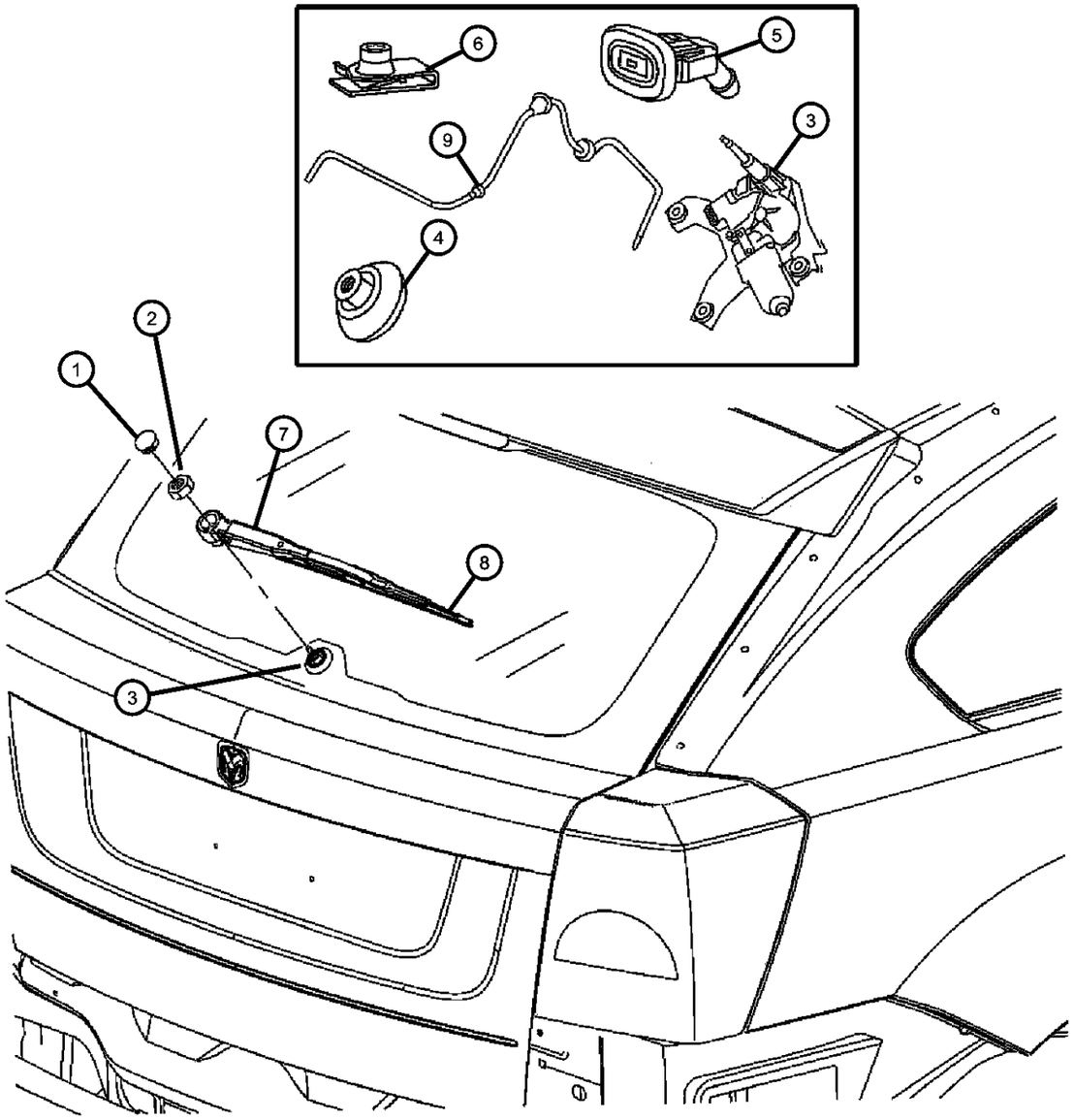

ITEM	PART NUMBER	QTY	LINE	SERIES	BODY	ENGINE	TRANS	TRIM	DESCRIPTION
1	05303788AA	1	J, T, U		49, 74				CAP, Wiper Arm Nut
2	05097674AA	1							NUT, Hex
3	05116146AC	1							MOTOR, Liftgate Wiper
4	05116200AA	1							GROMMET, Rear Wiper Motor
5	05303841AA	1	J, T, U		49				NOZZLE, Liftgate Washer
6	06506035AA	2							NUT, U, M6x1
7									ARM, Rear Wiper
	05183275AA	1							
	68003728AA	1	T, J, U		74				
8									BLADE, Rear Wiper
	05183276AA	1							
	WBRW0011AB								Mopar V-Line Alternative Part
	68003723AA	1	J, T, U		74				
9	05303839AE	1	T, U, J		49				HOSE ASSY, Rear WINDOW WIPER WASHER

COMPASS/PATRIOT (MK)

SERIES	LINE	BODY	ENGINE	TRANSMISSION
H = HIGHLINE L = LOWLINE P = PREMIUM	J = JEEP - 4WD T = JEEP - 2WD	49 = HATCHBACK TYPE #2 74 = SPORT UTILITY 4-DR TYPE #4	ED3 = 2.4L 4 Cyl DOHC 16V Dual VVT Engine	DD7 = 5-Speed Manual T355 Transmission DEF = 6-Speed Manual Aisin BG6 Trans DAV = Continuously Variable Transmission DAW = Cont.Var. w/Off-Rd Crawl Ratio Trans

Group - 24

Air Conditioning & Heater

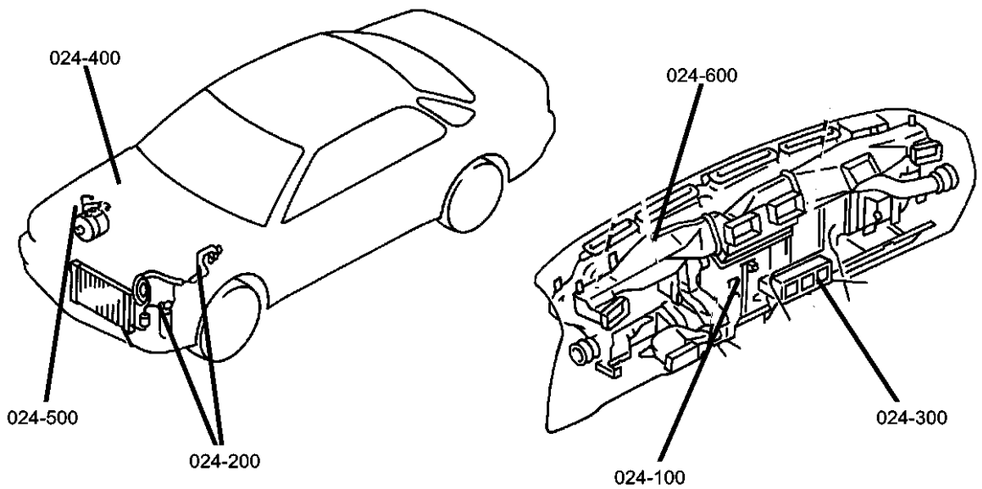

024-100 Air Conditioner and Heater Units 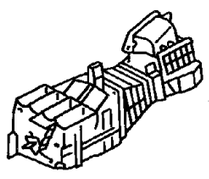	**024-200** Air Conditioner and Heater Plumbing 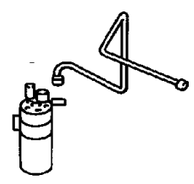	**024-300** Air Conditioner and Heater Controls 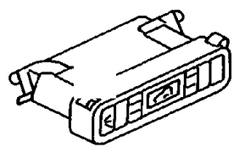	**024-400** Air Conditioning Compressor 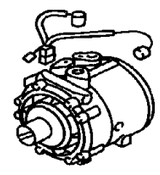
024-500 Air Conditioning Compressor Mounting 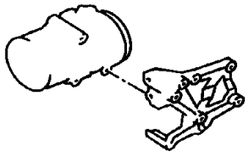	**024-600** Air Ducts and Outlets 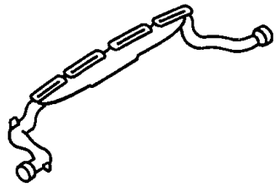		

Group - 24 Air Conditioning & Heater

Illustration Title — Group-Fig. No.

Air Conditioner and Heater Units
Heater Unit ..... Fig. 24 - 110
Air Conditioning Unit ..... Fig. 24 - 120

Air Conditioner and Heater Plumbing
Plumbing, Heater ..... Fig. 24 - 210
Plumbing, Air Conditioning ..... Fig. 24 - 220

Air Conditioner and Heater Controls
Heater Control ..... Fig. 24 - 310
Air Conditioning Control ..... Fig. 24 - 320

Air Conditioning Compressor
Compressor ..... Fig. 24 - 410

Air Conditioning Compressor Mounting
Compressor Mounting ..... Fig. 24 - 510

Air Ducts and Outlets
Air Distribution Ducts ..... Fig. 24 - 610
Air Distribution Outlets ..... Fig. 24 - 620

Heater Unit
Figure 24-110

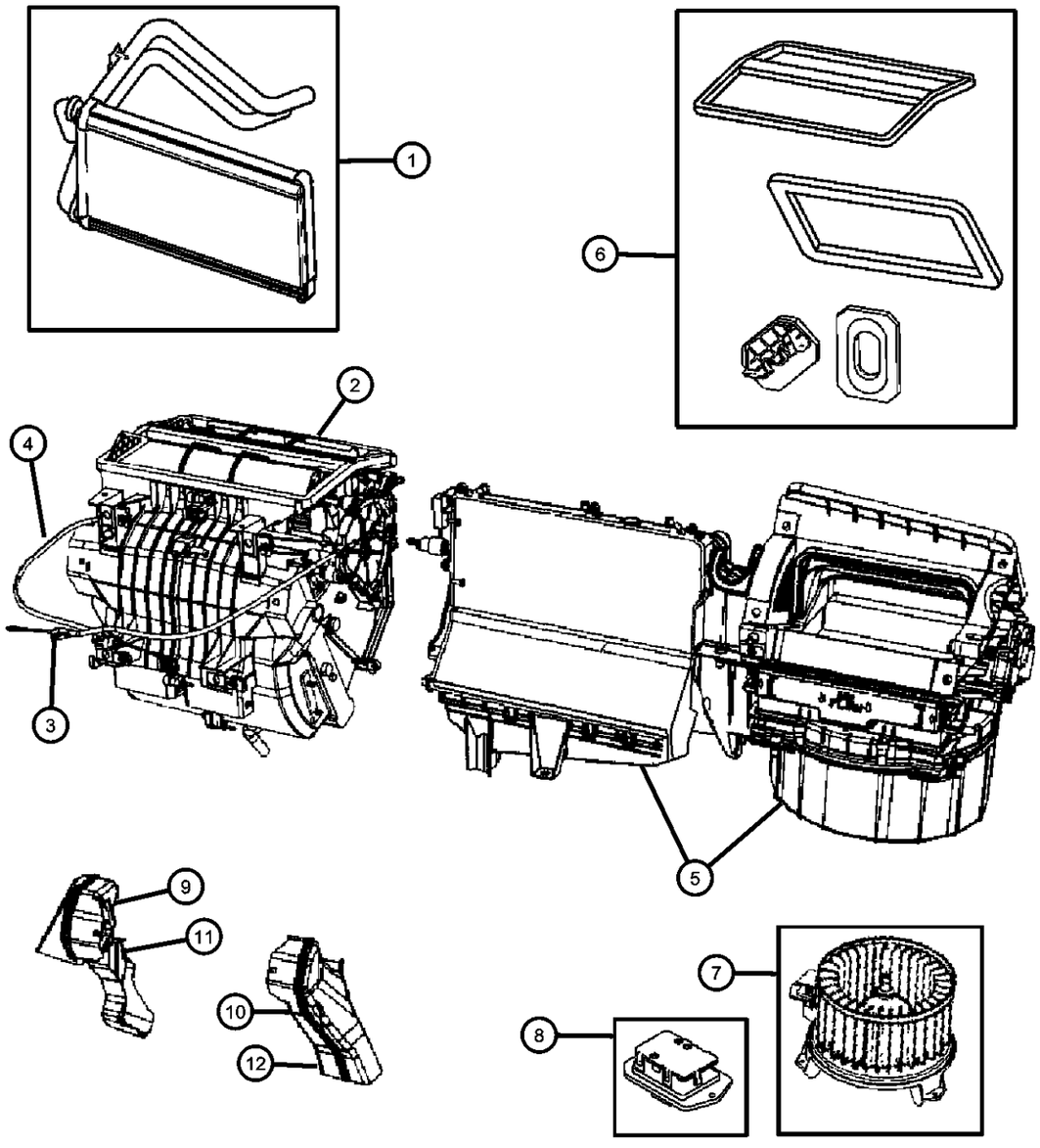

ITEM	PART NUMBER	QTY	LINE	SERIES	BODY	ENGINE	TRANS	TRIM	DESCRIPTION
1									CORE, Heater, Includes Pipe Clip and Screw
	05191347AA	1	J, T						
	68000469AA	1	U						
2	05191349AA	1							HOUSING, Distribution, Includes Defrost, Panel, Floor, and Air Mix Doors, Links, Levers, Cables
3	05191738AA	1							CABLE, Mode
4	05191741AA	1							CABLE, Temperature Control
5	05191801AA	1							HOUSING, Blower Motor, Includes Recirculation Door,Filter Case Door, Servo, coupler, Drain Tube
6	05191348AA	1							SEAL KIT, A/C And Heater Unit, Includes Case Foam, Evaperator Plate, Heater Pipe Packing, Mode Case Foam
7	05191345AA	1							MOTOR, Blower with Wheel, Includes Attaching Nuts
8									RESISTOR, Blower Motor, Includes Attaching Screws
	05191344AA	1							
	05191739AA	1	U			EBA, ECN, ED3			
9	05191353AA	1	J, T						DUCT, A/C And HeaterDrivers Side
10	05191352AA	1	J, T						DUCT, A/C And HeaterPassenger Side
11									DUCT, A/C And Heater
	05191736AA	1	U			EBA, ECN, ED3			Driver Side
		1	U			ECD			Driver Side
12									DUCT, A/C And Heater
	05191737AA	1	U			EBA, ECN, ED3			Passenger Side
		1	U			ECD			Passenger Side

COMPASS/PATRIOT (MK)

SERIES	LINE	BODY	ENGINE	TRANSMISSION
H = HIGHLINE L = LOWLINE P = PREMIUM	J = JEEP - 4WD T = JEEP - 2WD	49 = HATCHBACK TYPE #2 74 = SPORT UTILITY 4-DR TYPE #4	ED3 = 2.4L 4 Cyl DOHC 16V Dual VVT Engine	DD7 = 5-Speed Manual T355 Transmission DEF = 6-Speed Manual Aisin BG6 Trans DAV = Continuously Variable Transmission DAW = Cont.Var. w/Off-Rd Crawl Ratio Trans

Air Conditioning Unit
Figure 24-120

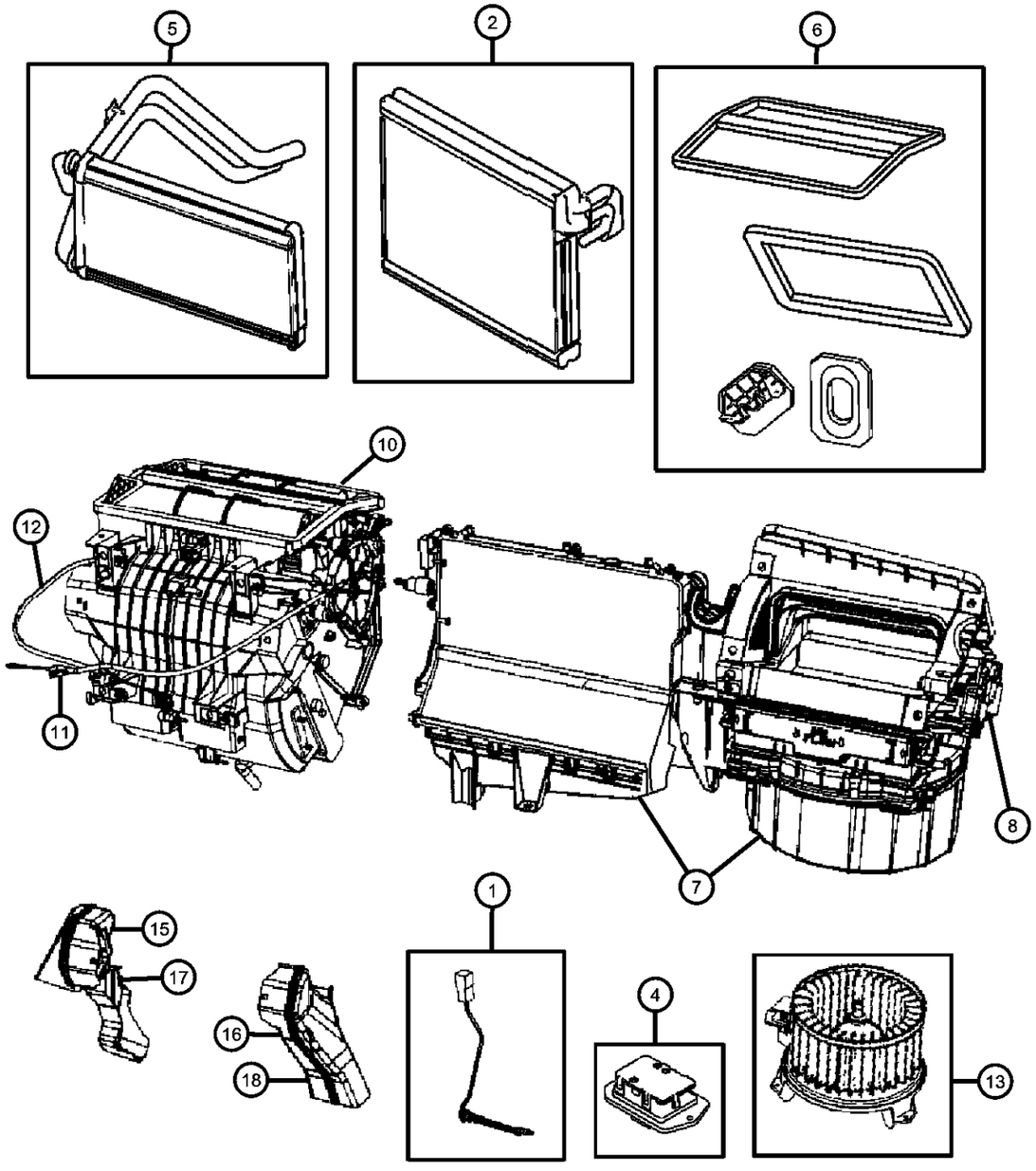

ITEM	PART NUMBER	QTY	LINE	SERIES	BODY	ENGINE	TRANS	TRIM	DESCRIPTION
1	05191343AA	1							PROBE, Air Conditioning, Includes Bracket
2	05191346AA	1							EVAPORATOR, Air Conditioning
-3	05058576AA	1							GROMMET, DrainEvaporator
4									RESISTOR, Blower Motor, Includes Attaching Screws
	05191344AA	1	J, T						
	05191739AA	1	U			EBA, ECN, ED3			
		1	U			ECD			
5									CORE, Heater, Includes Pipe Clip and Screw
	05191347AA	1	J, T						
	68000469AA	1	U						
6	05191348AA	1							SEAL KIT, A/C And Heater Unit, Includes Case Foam, Evaperator Plate, Heater Pipe Packing, Mode Case Foam
7									HOUSING, Blower Motor, Includes Recirculation Door,Filter Case Door, Servo, Coupler, Drain Tube
	05191350AA	1	J, T			EBA, ECN, ED3			
		1	J, T			ECD			
	05191735AA	1	U			EBA, ECN, ED3			
		1	U			ECD			
8	68000470AA	1							ACTUATOR, A/C and Heater
-9									HOSE, Drain
	68018107AB	1	U		49, 74				
		1	J, T		49				
		1	J, T		74				
10									HOUSING, Distribution, Includes Defrost, Panel, Floor, and Air Mix Doors, Links, Levers, Cables
	05191349AA	1	J, T			EBA, ECN, ED3			
		1	U			EBA, ECN, ED3			
	05191734AA	1	J, T			ECD			

COMPASS/PATRIOT (MK)

SERIES	LINE	BODY	ENGINE	TRANSMISSION
H = HIGHLINE L = LOWLINE P = PREMIUM	J = JEEP - 4WD T = JEEP - 2WD	49 = HATCHBACK TYPE #2 74 = SPORT UTILITY 4-DR TYPE #4	ED3 = 2.4L 4 Cyl DOHC 16V Dual VVT Engine	DD7 = 5-Speed Manual T355 Transmission DEF = 6-Speed Manual Aisin BG6 Trans DAV = Continuously Variable Transmission DAW = Cont.Var. w/Off-Rd Crawl Ratio Trans

AR = use ase required - = Non illustrrated part

Air Conditioning Unit
Figure 24-120

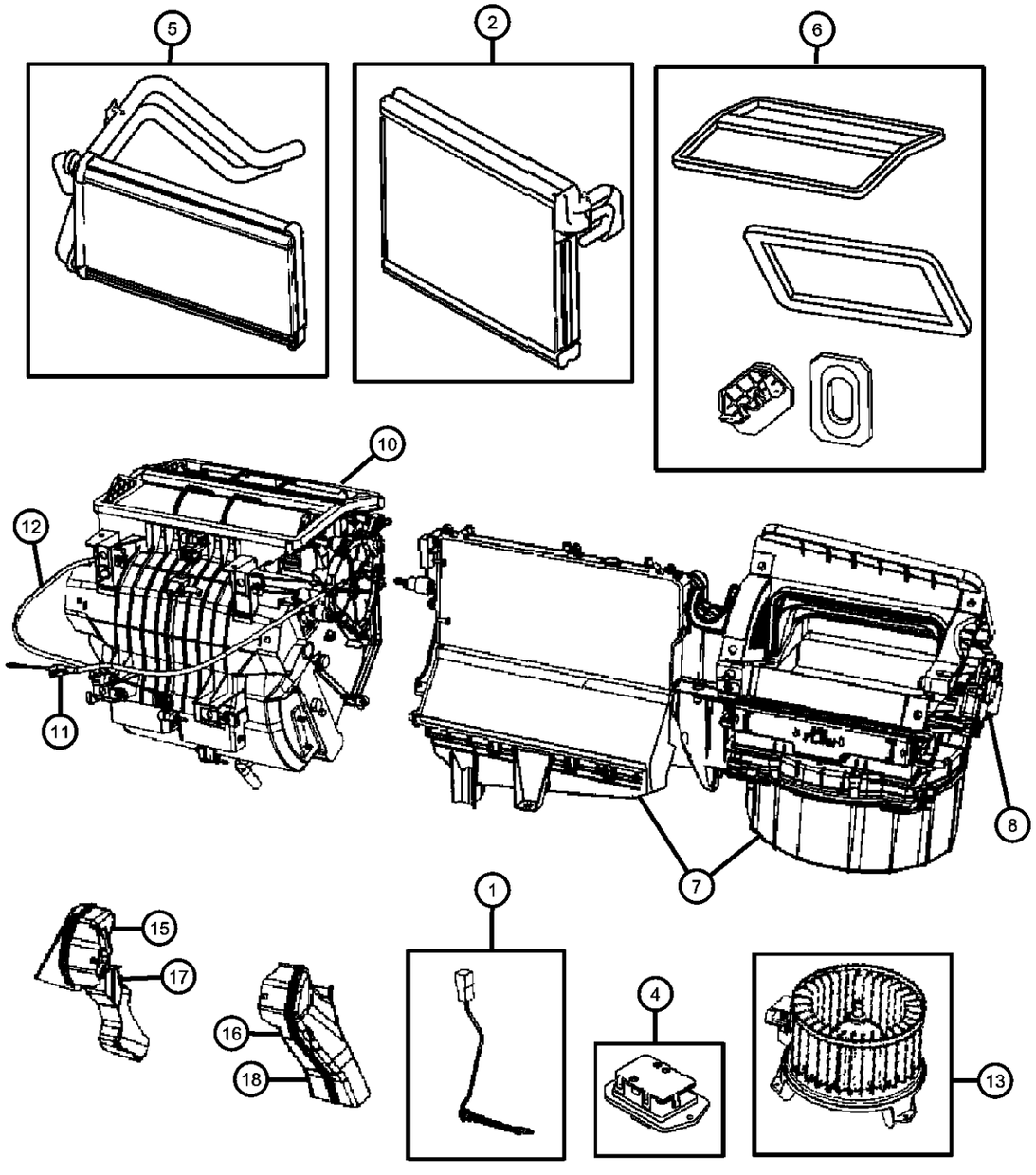

ITEM	PART NUMBER	QTY	LINE	SERIES	BODY	ENGINE	TRANS	TRIM	DESCRIPTION
		1	U			ECD			
11	05191738AA	1							CABLE, Mode
12	05191741AA	1							CABLE, Temperature Control
13									MOTOR, Blower with Wheel, Includes Attaching Nuts
	05191345AA	1	J, T						
	05191743AA	1	U			ECD			
		1	U			EBA, ECN, ED3			
-14									HEATER, Cab
	05191742AA	1	J, T			ECD			
		1	U			ECD			
15	05191353AA	1	J, T						DUCT, A/C And HeaterDriver Side
16	05191352AA	1	J, T						DUCT, A/C And HeaterPassenger Side
17									DUCT, A/C And Heater
	05191736AA	1	U			EBA, ECN, ED3			Driver Side
		1	U			ECD			Driver Side
18									DUCT, A/C And Heater
	05191737AA	1	U			EBA, ECN, ED3			Passenger Side
		1	U			ECD			Passenger Side
-19	05058381AA	1							FILTER, A/C and Heater Unit
-20	06104181AA	5							BOLTA/C Unit To Dash

COMPASS/PATRIOT (MK)

SERIES	LINE	BODY	ENGINE	TRANSMISSION
H = HIGHLINE L = LOWLINE P = PREMIUM	J = JEEP - 4WD T = JEEP - 2WD	49 = HATCHBACK TYPE #2 74 = SPORT UTILITY 4-DR TYPE #4	ED3 = 2.4L 4 Cyl DOHC 16V Dual VVT Engine	DD7 = 5-Speed Manual T355 Transmission DEF = 6-Speed Manual Aisin BG6 Trans DAV = Continuously Variable Transmission DAW = Cont.Var. w/Off-Rd Crawl Ratio Trans

AR = use ase required - = Non illustrrated part

Plumbing, Heater
Figure 24-210

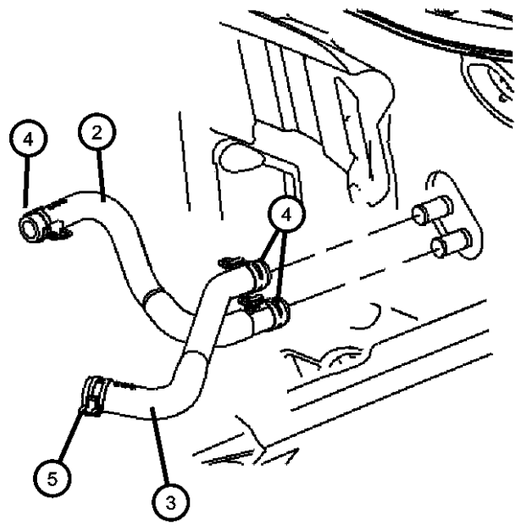

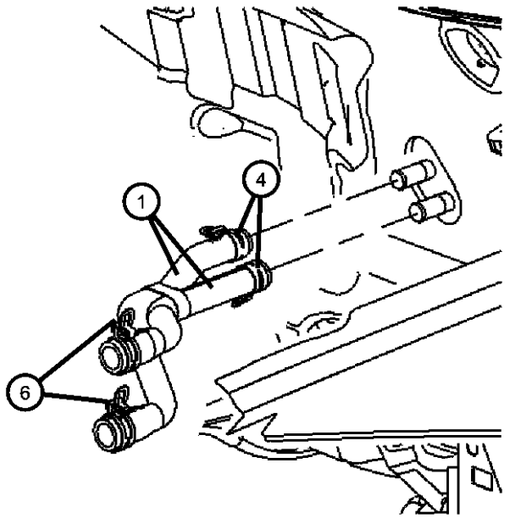

ITEM	PART NUMBER	QTY	LINE	SERIES	BODY	ENGINE	TRANS	TRIM	DESCRIPTION
1	05058262AD	1				ED3			HOSE, Heater Supply and Return
2	05058226AD	1				ECD			HOSE, Heater Supply
3	05058303AD	1				ECD			HOSE, Heater Return
4	06502017	1				ECD			CLAMP, Hose, 24X15
5	06502018	1				ECD			CLAMP, Hose, 27X15
6	06502019	2				ED3			CLAMP, Hose, 29X15

COMPASS/PATRIOT (MK)

SERIES	LINE	BODY	ENGINE	TRANSMISSION
H = HIGHLINE L = LOWLINE P = PREMIUM	J = JEEP - 4WD T = JEEP - 2WD	49 = HATCHBACK TYPE #2 74 = SPORT UTILITY 4-DR TYPE #4	ED3 = 2.4L 4 Cyl DOHC 16V Dual VVT Engine	DD7 = 5-Speed Manual T355 Transmission DEF = 6-Speed Manual Aisin BG6 Trans DAV = Continuously Variable Transmission DAW = Cont.Var. w/Off-Rd Crawl Ratio Trans

AR = use ase required - = Non illustrrated part

Plumbing, Air Conditioning
Figure 24-220

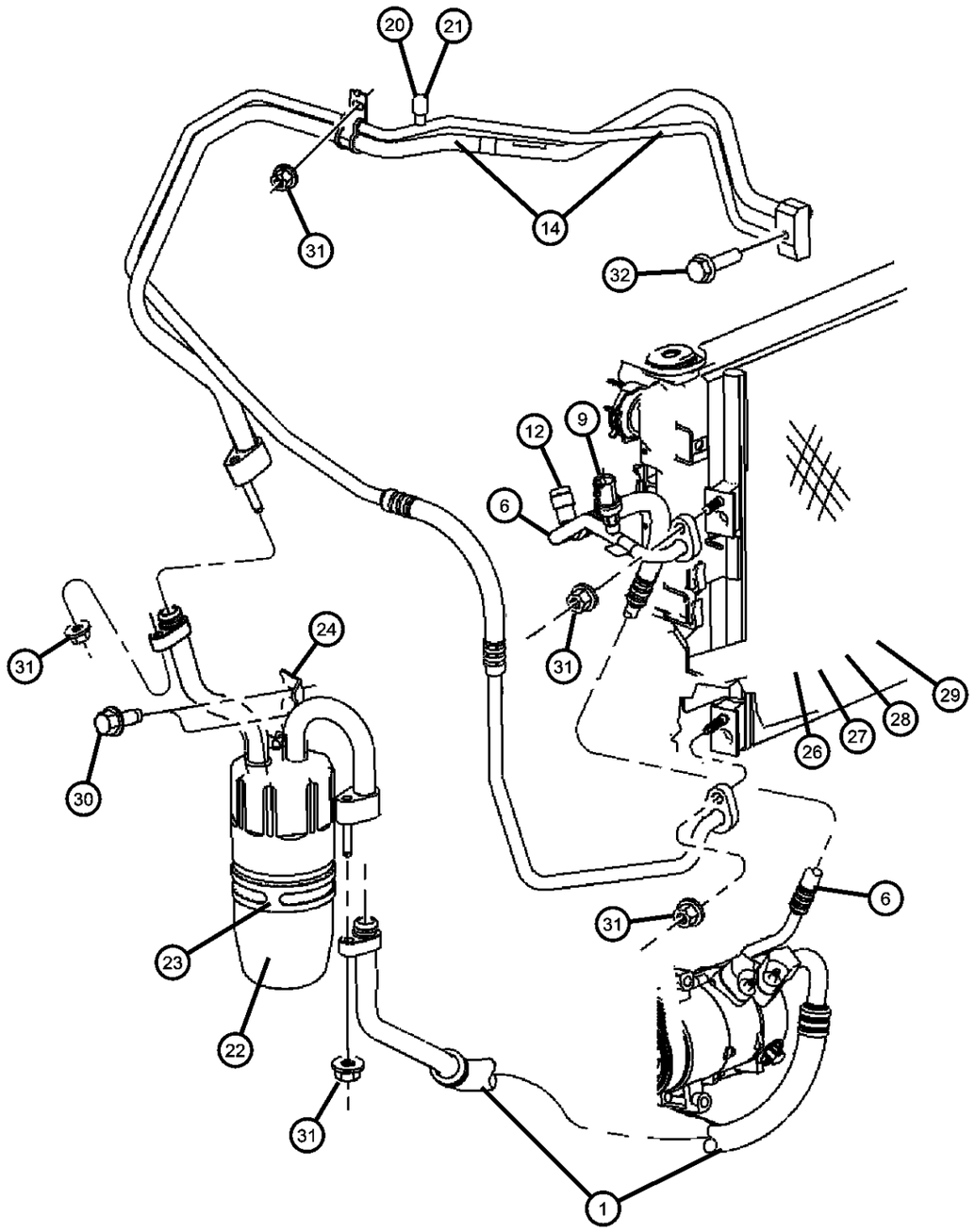

ITEM	PART NUMBER	QTY	LINE	SERIES	BODY	ENGINE	TRANS	TRIM	DESCRIPTION
Sales Code :									
[ED3] = [2.4L]DOHC Gas Engine									
[ECN] = [2.0L]DOHC Gas Engine									
[ECD] = [2.0L] DOHC Diesel Engine									
[DAV] = Continuously Variable Transmission									
[DD7] = Five Speed Manual									
[DEF] = Six Speed Manual									
1									LINE, A/C Suction
	05058151AB	1				ECN, ED3			
	05058230AB	1				ECD			
-2									O RING, A/C Line
	05189357AA	1				ECD			Accumulator End
		1	J, T, U		49	ECN, ED3			Accumulator End
		1	J, T, U		74	ECN, ED3			Accumulator End
-3									SEAL, Slim Line
	05189358AA	1				ED3			Drier End
		1				ECD			Drier End
-4									O RING, A/C Line
	05189359AA	1				ECD			Compressor End
		1	J, T, U		49	ECN, ED3			
		1	J, T, U		74	ECN, ED3			
-5									SEAL, Slim Line
	05189360AA	1				ECD			Compressor End
		1	J, T, U		49	ECN, ED3			Compressor End
		1	J, T, U		74	ECN, ED3			Compressor End
6									LINE, A/C Discharge
	05058229AB	1				ECD			
	05058553AB	1	J, T, U		49	ECN, ED3			
		1	J, T, U		74	ECN, ED3			
-7									SEAL, Slim Line
	05189360AA	1	J, T, U		49	ECN, ED3			Compressor and Condenser End
		1	J, T, U		74	ECN, ED3			Compressor and Condenser End
	05189362AA	2				ECD			Compressor and Condenser End
-8									O RING, A/C Line

COMPASS/PATRIOT (MK)

SERIES	LINE	BODY	ENGINE	TRANSMISSION
H = HIGHLINE L = LOWLINE P = PREMIUM	J = JEEP - 4WD T = JEEP - 2WD	49 = HATCHBACK TYPE #2 74 = SPORT UTILITY 4-DR TYPE #4	ED3 = 2.4L 4 Cyl DOHC 16V Dual VVT Engine	DD7 = 5-Speed Manual T355 Transmission DEF = 6-Speed Manual Aisin BG6 Trans DAV = Continuously Variable Transmission DAW = Cont.Var. w/Off-Rd Crawl Ratio Trans

Plumbing, Air Conditioning
Figure 24-220

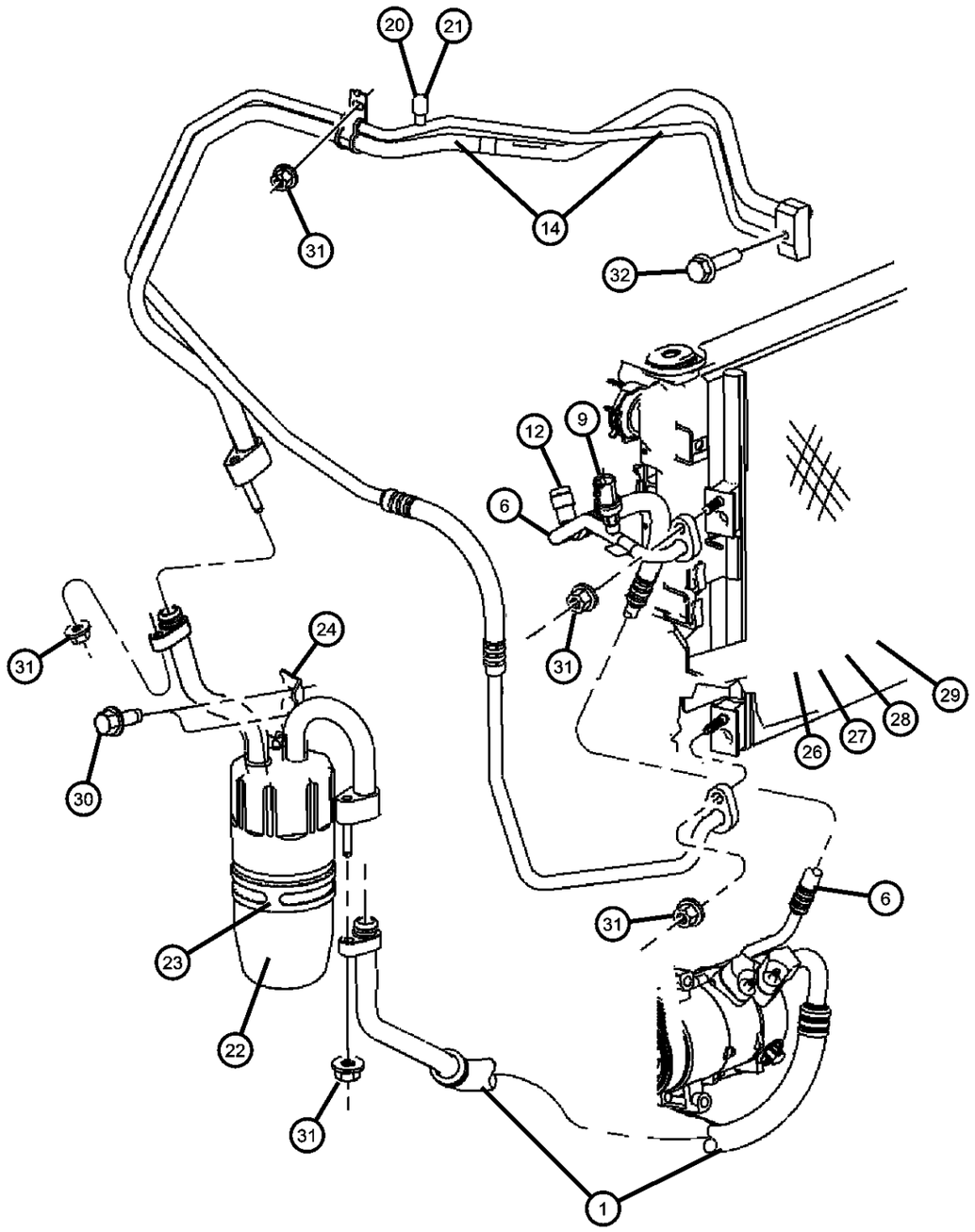

ITEM	PART NUMBER	QTY	LINE	SERIES	BODY	ENGINE	TRANS	TRIM	DESCRIPTION
	05189361AA	2				ECD			Compressor and Condenser End
		1	J, T, U		49	ECN, ED3			Compressor and Condenser End
		1	J, T, U		74	ECN, ED3			Compressor and Condenser End
9									VALVE, A/C pressure Transducer
	05174039AB	1	J, T, U		49	ECD			
		1	J, T, U		74	ECD			
		1	J, T, U		49	ECN, ED3			
		1	J, T, U		74	ECN, ED3			
-10									O RING, A/C Line
	05183358AA	1				ECD			Transducer to Line
		1	J, T, U		49	ECN, ED3			Transducer to Line
		1	J, T, U		74	ECN, ED3			Transducer to Line
-11									VALVE, A/C Discharge Line Check
	05003862AA	1				ECD			
		1	J, T, U		74	ECN, ED3			
		1	J, T, U		49	ECN, ED3			
12									CAP, A/C Charge Valve
	05161786AA	1	J, T, U		49	ECN, ED3			
		1	J, T, U		74	ECN, ED3			
	05189364AA	1				ECD			
-13									VALVE CORE, A/C Line
	05189365AA	1				ECD			
		1	J, T, U		49	ECN, ED3			
		1	J, T, U		74	ECN, ED3			
14									LINE, A/C Suction And Liquid
	05058152AE	1	J, T, U		49	ECN, ED3			
		1	J, T, U		74	ECN, ED3			
	05058278AD	1	J, T, U		49, 74	ECD			
-15									O RING, A/C Line
	05189361AA	1				ECD			Condenser End
		2	J, T, U		49	ECN, ED3			Condenser End
		2	J, T, U		74	ECN, ED3			Condenser End

COMPASS/PATRIOT (MK)

SERIES	LINE	BODY	ENGINE	TRANSMISSION
H = HIGHLINE L = LOWLINE P = PREMIUM	J = JEEP - 4WD T = JEEP - 2WD	49 = HATCHBACK TYPE #2 74 = SPORT UTILITY 4-DR TYPE #4	ED3 = 2.4L 4 Cyl DOHC 16V Dual VVT Engine	DD7 = 5-Speed Manual T355 Transmission DEF = 6-Speed Manual Aisin BG6 Trans DAV = Continuously Variable Transmission DAW = Cont.Var. w/Off-Rd Crawl Ratio Trans

AR = use ase required - = Non illustrrated part

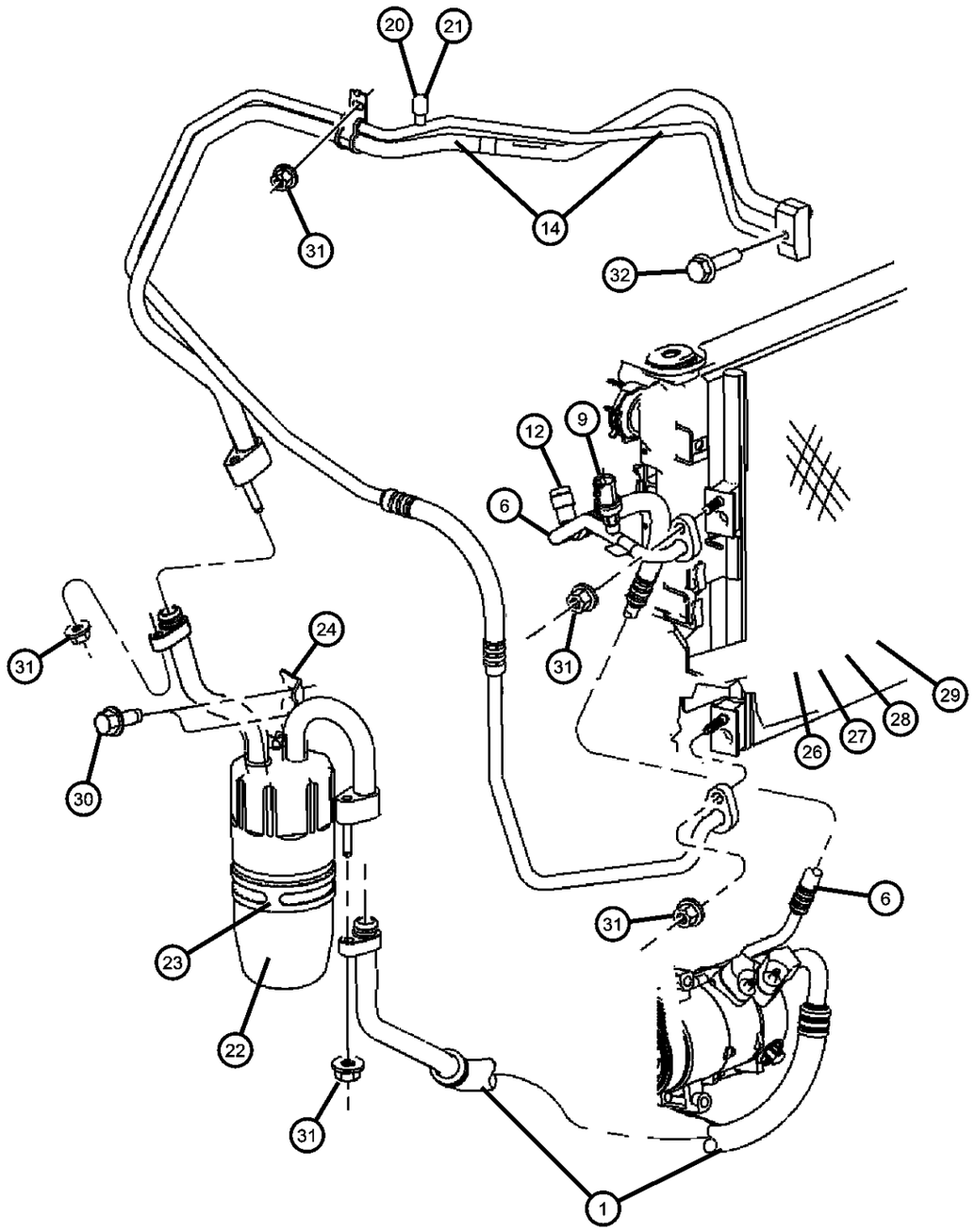

ITEM	PART NUMBER	QTY	LINE	SERIES	BODY	ENGINE	TRANS	TRIM	DESCRIPTION
-16									SEAL, Slim Line
	05189362AA	1				ECD			Condenser End
		2	J, T, U		49	ECN, ED3			Condenser End
		2	J, T, U		74	ECN, ED3			Condenser End
-17									SEAL, A/C Line, Slim Line
	05096243AA	2	U, J, T		49	ECN, ED3			Evaporator End 1/2 inch Liquid
		2	J, T, U		74	ECN, ED3			Evaporator End 1/2 inch Liquid
		2	J, T, U		49	ECD			Evaporator End 1/2 inch Liquid
		2	J, T, U		74	ECD			Evaporator End 1/2 inch Liquid
-18									SEAL, A/C Line, Slim Line
	05096242AA	2	J, T, U		49	ECN, ED3			Evaporator End 3/4 inch Suction
		2	J, T, U		74	ECN, ED3			Evaporator End 3/4 inch Suction
		2	J, T, U		49	ECD			Evaporator End 3/4 inch Suction
		2	J, T, U		74	ECD			Evaporator End 3/4 inch Suction
-19									O RING, A/C Line
	05189372AA	1				ECD			Suction Line to Accumulator
		1	J, T, U		49	ECN, ED3			Suction Line to Accumulator
		1	J, T, U		74	ECN, ED3			Suction Line to Accumulator
20									VALVE CORE, A/C Line
	05189373AA	1				ECD			
		1	J, T, U		49	ECN, ED3			
		1	J, T, U		74	ECN, ED3			
21									CAP, A/C Check Valve
	05189374AA	1				ECD			
		1	J, T, U		49	ECN, ED3			
		1	J, T, U		74	ECN, ED3			
22	05189376AA	1	J, T, U		49, 74				ACCUMULATOR, Air Conditioning
23	05189378AA	1	J, T, U		49, 74				BRACKET, Accumulator, Band
24	05189377AB	1	J, T, U		49, 74				BRACKET, Accumulator
-25	05189379AB	1	U, J, T		49, 74				SCREW, Accumulator Bracket
26	68004052AA	1	J, T, U		49, 74	EBA, ECN, ED3			CONDENSER, Air Conditioning, Manual Transmission [DD7,DEF]

COMPASS/PATRIOT (MK)

SERIES	LINE	BODY	ENGINE	TRANSMISSION
H = HIGHLINE L = LOWLINE P = PREMIUM	J = JEEP - 4WD T = JEEP - 2WD	49 = HATCHBACK TYPE #2 74 = SPORT UTILITY 4-DR TYPE #4	ED3 = 2.4L 4 Cyl DOHC 16V Dual VVT Engine	DD7 = 5-Speed Manual T355 Transmission DEF = 6-Speed Manual Aisin BG6 Trans DAV = Continuously Variable Transmission DAW = Cont.Var. w/Off-Rd Crawl Ratio Trans

Plumbing, Air Conditioning
Figure 24-220

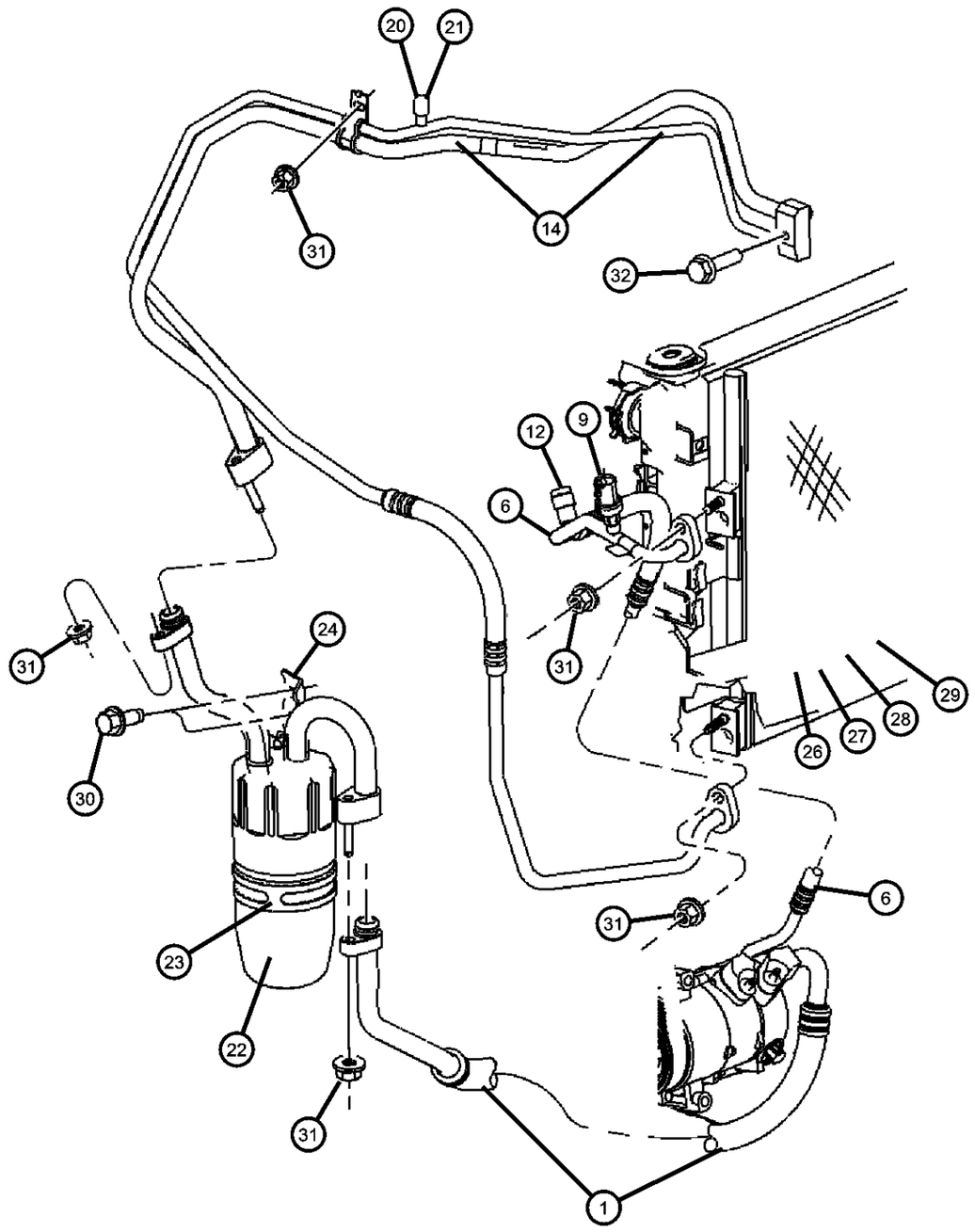

ITEM	PART NUMBER	QTY	LINE	SERIES	BODY	ENGINE	TRANS	TRIM	DESCRIPTION
27	05191287AA	1	J, T, U		49, 74	ECD			CONDENSER, Air Conditioning, Manual Transmission [DD7,DEF]
28	68004053AA	1	J, T, U		49, 74	ECN, ED3			COOLER, Condenser and Aux TOC, Automatic Transmission [DAV]
29	68004296AA	1	J, T, U		49, 74	ECN, ED3			CONDENSER, Air Conditioning, Automatic Transmission [DAW]
30	06104392AA	2							SCREW AND WASHER, Hex Head, M8x1.25x40, Accumulator Bracket to Rail
31	06104709AA	4							NUT, Hex Flange, M8x1.25
32	06104709AA	4							SCREW, Hex Head, M8x1.25x55, (NOT SERVICED)

COMPASS/PATRIOT (MK)

SERIES	LINE	BODY	ENGINE	TRANSMISSION
H = HIGHLINE L = LOWLINE P = PREMIUM	J = JEEP - 4WD T = JEEP - 2WD	49 = HATCHBACK TYPE #2 74 = SPORT UTILITY 4-DR TYPE #4	ED3 = 2.4L 4 Cyl DOHC 16V Dual VVT Engine	DD7 = 5-Speed Manual T355 Transmission DEF = 6-Speed Manual Aisin BG6 Trans DAV = Continuously Variable Transmission DAW = Cont.Var. w/Off-Rd Crawl Ratio Trans

AR = use ase required - = Non illustrrated part

Heater Control
Figure 24-310

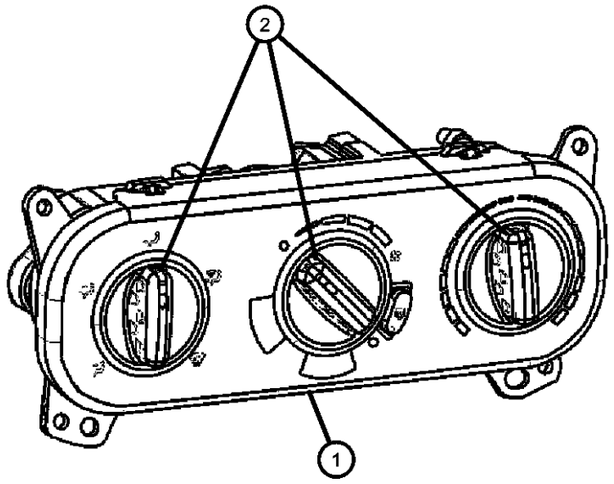

ITEM	PART NUMBER	QTY	LINE	SERIES	BODY	ENGINE	TRANS	TRIM	DESCRIPTION
Sales Code: [HCA] = Heater Only									
1									CONTROL, Heater
	05058300AC	1							[HCA] Up-To 11-14-06 Silver Knobs
	55111878AA	1	J, T, U		49, 74				[HCA] After 11-14-06 Black Knobs
2	55111878AA	1							KNOB, Heater Control, Only Serviced in Control, (NOT SERVICED),
-3	06101946	4							SCREW, TappingA/C Control Mounting

COMPASS/PATRIOT (MK)

SERIES	LINE	BODY	ENGINE	TRANSMISSION
H = HIGHLINE L = LOWLINE P = PREMIUM	J = JEEP - 4WD T = JEEP - 2WD	49 = HATCHBACK TYPE #2 74 = SPORT UTILITY 4-DR TYPE #4	ED3 = 2.4L 4 Cyl DOHC 16V Dual VVT Engine	DD7 = 5-Speed Manual T355 Transmission DEF = 6-Speed Manual Aisin BG6 Trans DAV = Continuously Variable Transmission DAW = Cont.Var. w/Off-Rd Crawl Ratio Trans

Air Conditioning Control
Figure 24-320

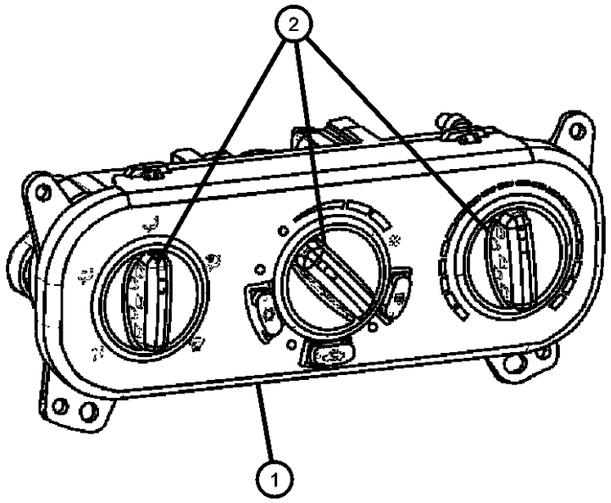

ITEM	PART NUMBER	QTY	LINE	SERIES	BODY	ENGINE	TRANS	TRIM	DESCRIPTION
Sales Code: [HAA] = Heater and Air Conditioning									
1									CONTROL, A/C And Heater
	05058299AD	1	J, T, U		49				[HAA] Up-To 11-14-06 Silver Knobs
	05058307AD	1	J, T, U		74				[HAA] Up-To 11-14-06 Silver Knobs
	55111874AA	1	J, T, U		49, 74				[HAA] After 11-14-06 Black Knobs
2	55111874AA	1							KNOB, Heater Control, Only Serviced in Control, (NOT SERVICED),
-3	06101946	4							SCREW, TappingA/C Control Mounting

COMPASS/PATRIOT (MK)

SERIES	LINE	BODY	ENGINE	TRANSMISSION
H = HIGHLINE L = LOWLINE P = PREMIUM	J = JEEP - 4WD T = JEEP - 2WD	49 = HATCHBACK TYPE #2 74 = SPORT UTILITY 4-DR TYPE #4	ED3 = 2.4L 4 Cyl DOHC 16V Dual VVT Engine	DD7 = 5-Speed Manual T355 Transmission DEF = 6-Speed Manual Aisin BG6 Trans DAV = Continuously Variable Transmission DAW = Cont.Var. w/Off-Rd Crawl Ratio Trans

Compressor
Figure 24-410

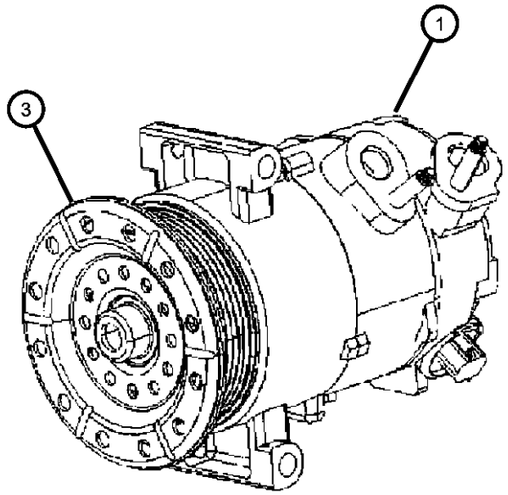

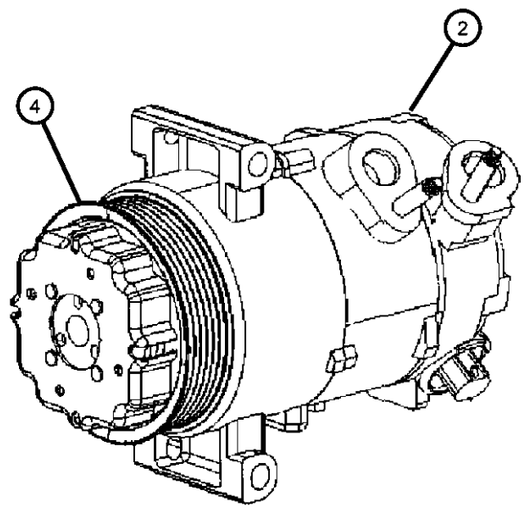

ITEM	PART NUMBER	QTY	LINE	SERIES	BODY	ENGINE	TRANS	TRIM	DESCRIPTION
1	05058228AE	1				ED3			COMPRESSOR, Air Conditioning
2	55111423AC	1				ECD			COMPRESSOR, Air Conditioning
3	68001766AA	1	J, T, U		49, 74	ED3			PULLEY, A/C Compressor
4	68001767AA	1	J, T, U		49, 74	ECD			PULLEY, A/C Compressor

COMPASS/PATRIOT (MK)

SERIES	LINE	BODY	ENGINE	TRANSMISSION
H = HIGHLINE L = LOWLINE P = PREMIUM	J = JEEP - 4WD T = JEEP - 2WD	49 = HATCHBACK TYPE #2 74 = SPORT UTILITY 4-DR TYPE #4	ED3 = 2.4L 4 Cyl DOHC 16V Dual VVT Engine	DD7 = 5-Speed Manual T355 Transmission DEF = 6-Speed Manual Aisin BG6 Trans DAV = Continuously Variable Transmission DAW = Cont.Var. w/Off-Rd Crawl Ratio Trans

Compressor Mounting
Figure 24-510

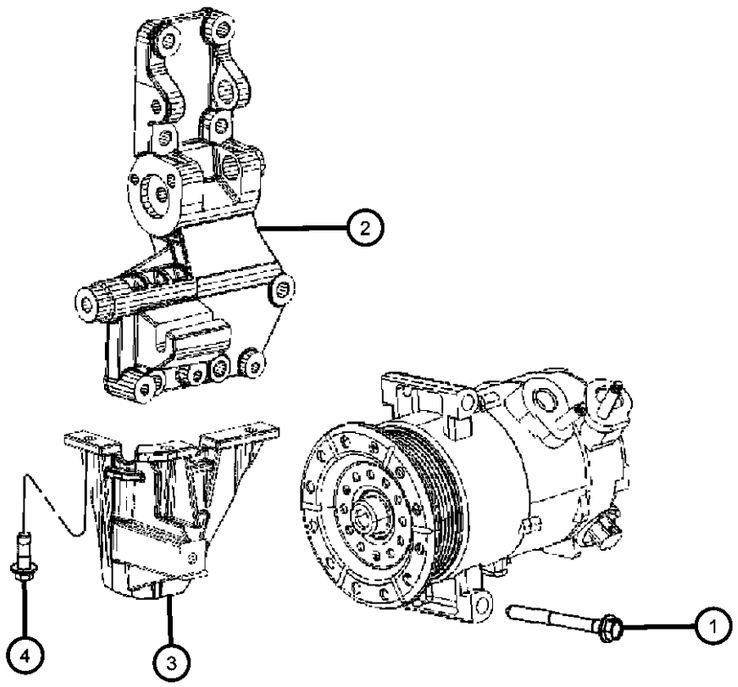

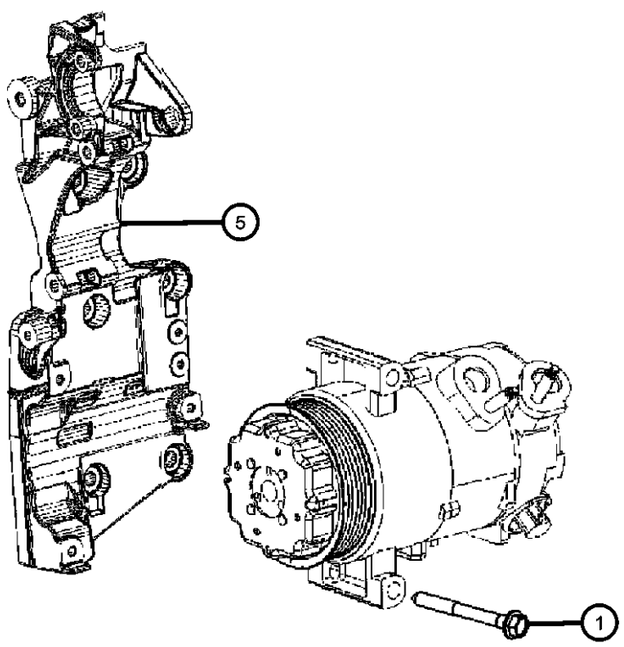

ITEM	PART NUMBER	QTY	LINE	SERIES	BODY	ENGINE	TRANS	TRIM	DESCRIPTION
1	06104035AA	3							SCREWCompressor Mounting
2	04891592AA	1				ED3			BRACKET, Accessory MountUpper
3	04891594AA	1				ED3			BRACKET, A/C CompressorLower
4	06104197AA	3							SCREW, Lower Bracket Mounting
5	68000635AA	1				ECD			BRACKET, Accessory Mount

COMPASS/PATRIOT (MK)

SERIES	LINE	BODY	ENGINE	TRANSMISSION
H = HIGHLINE L = LOWLINE P = PREMIUM	J = JEEP - 4WD T = JEEP - 2WD	49 = HATCHBACK TYPE #2 74 = SPORT UTILITY 4-DR TYPE #4	ED3 = 2.4L 4 Cyl DOHC 16V Dual VVT Engine	DD7 = 5-Speed Manual T355 Transmission DEF = 6-Speed Manual Aisin BG6 Trans DAV = Continuously Variable Transmission DAW = Cont.Var. w/Off-Rd Crawl Ratio Trans

AR = use ase required - = Non illustrrated part

Air Distribution Ducts
Figure 24-610

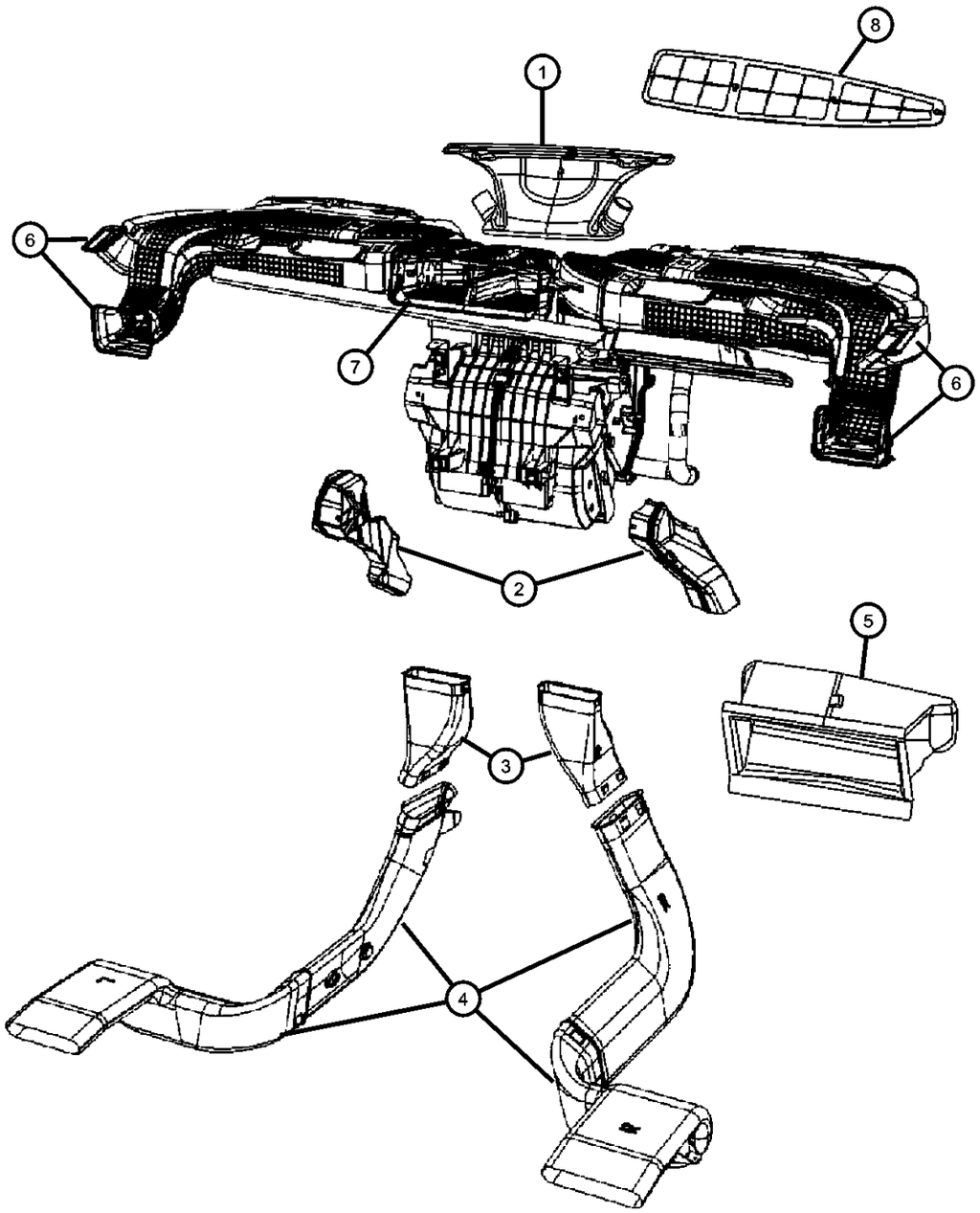

ITEM	PART NUMBER	QTY	LINE	SERIES	BODY	ENGINE	TRANS	TRIM	DESCRIPTION
1	05058202AA	1							DUCT, Defroster
2									DUCT, A/C And Heater
	05191352AA	1	J, T						Right
	05191736AA	1	U			ED3, EBA, ECN			Right
	05191353AA	1	J, T						Left
		1	U			ECD			Right
	05191737AA	1	U			EBA, ECN, ED3			Left
		1	U			ECD			Left
3									DUCT, Instrument Panel
	05058417AA	1							Left
	05058420AA	1							Right
4									DUCT, Air to Rear Seat
	05058198AA	1							Right
	05058199AA	1							Left
5	05058297AA	1	J, T		49				DUCT, Air Inlet
6									DUCT, Demister
	05058206AA	1	J, T		49				Right
	05058207AA	1	J, T		49				Left
7	05058203AA	1	J, T		49				DUCT, Air Outlet DistributionCenter
8	05058323AA	1							SCREEN, Air Inlet
-9	06101946	12							SCREW, Tapping, Duct Mounting

COMPASS/PATRIOT (MK)

SERIES	LINE	BODY	ENGINE	TRANSMISSION
H = HIGHLINE L = LOWLINE P = PREMIUM	J = JEEP - 4WD T = JEEP - 2WD	49 = HATCHBACK TYPE #2 74 = SPORT UTILITY 4-DR TYPE #4	ED3 = 2.4L 4 Cyl DOHC 16V Dual VVT Engine	DD7 = 5-Speed Manual T355 Transmission DEF = 6-Speed Manual Aisin BG6 Trans DAV = Continuously Variable Transmission DAW = Cont.Var. w/Off-Rd Crawl Ratio Trans

Air Distribution Outlets
Figure 24-620

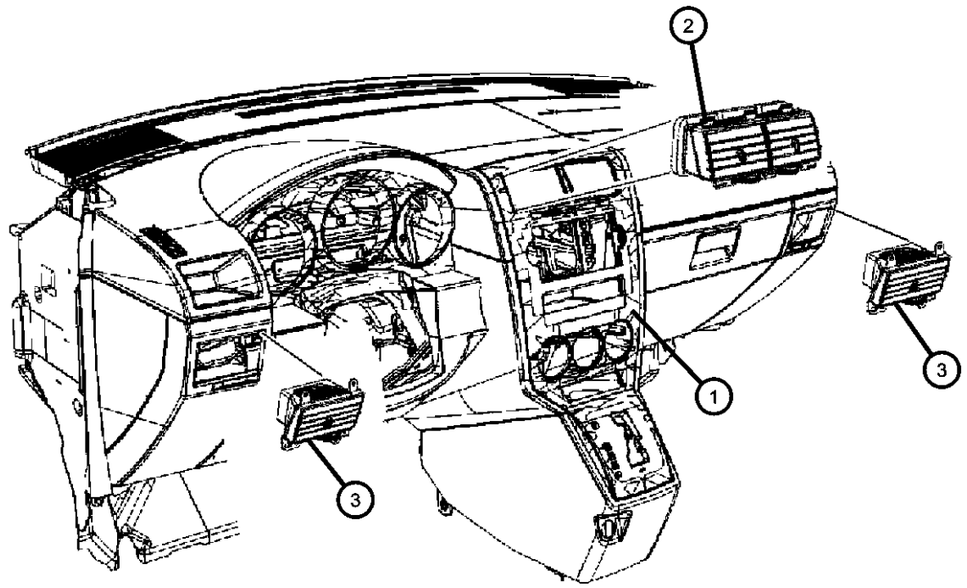

ITEM	PART NUMBER	QTY	LINE	SERIES	BODY	ENGINE	TRANS	TRIM	DESCRIPTION
Sales Code: [REJ] = Navigation System									
1									BEZEL, Instrument Panel, Center
	0YF381SFAA	1							Without [REJ] Includes Center Outlet
	0YZ161SFAA	1							With [REJ] Includes Center Outlet
2	0YZ161SFAA	1							OUTLET, Air Conditioning & Heater, Serviced with Center Bezel, (NOT SERVICED),
3									OUTLET, Air Conditioning & Heater
	1CC70DK7AA	1	J, T		49				[KA] Right Outer
		1	U		49, 74				[KA] Right Outer
	1CC70XDVAA	1	U		49, 74				[DA] Right Outer
		1	J, T		49				[DA] Right Outer
	1CC71XDVAA	1	J, T		49, 74				[DA] Left Outer
		1	U		49, 74				[DA] Left Outer
	1CC71DK7AA	1	J, T		49, 74				[KA] Left Outer
		1	U		49, 74				[KA] Left Outer

COMPASS/PATRIOT (MK)

SERIES	LINE	BODY	ENGINE	TRANSMISSION
H = HIGHLINE L = LOWLINE P = PREMIUM	J = JEEP - 4WD T = JEEP - 2WD	49 = HATCHBACK TYPE #2 74 = SPORT UTILITY 4-DR TYPE #4	ED3 = 2.4L 4 Cyl DOHC 16V Dual VVT Engine	DD7 = 5-Speed Manual T355 Transmission DEF = 6-Speed Manual Aisin BG6 Trans DAV = Continuously Variable Transmission DAW = Cont.Var. w/Off-Rd Crawl Ratio Trans

Group - 25

Emission Systems

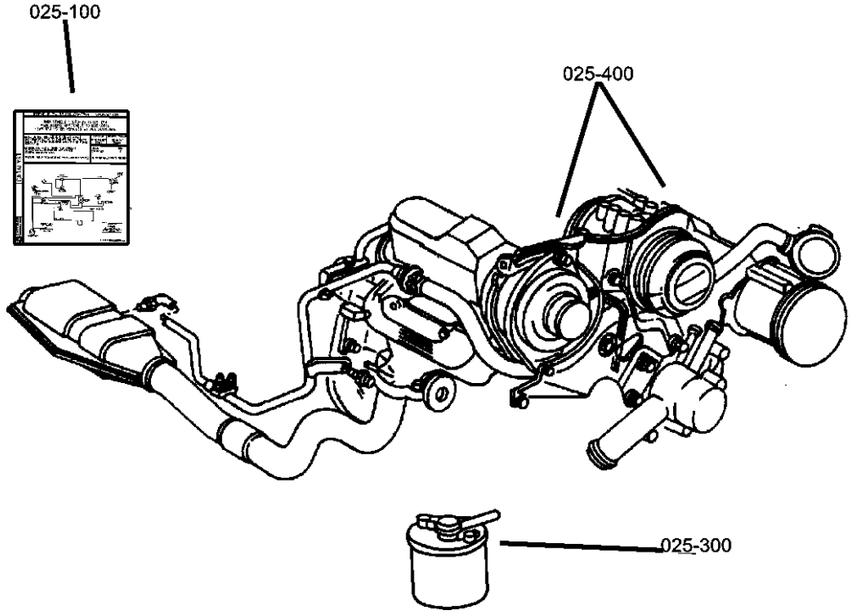

025-200 EGR System 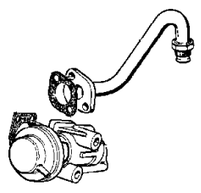	**025-300** Vacuum Canister 	**025-400** Emission Harness 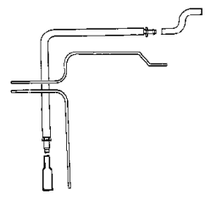	

Group - 25 Emission Systems

Illustration Title — Group-Fig. No.

EGR System
EGR System ..... Fig. 25 - 210

Vacuum Canister
Vapor Canister and Leak Detection Pump ..... Fig. 25 - 310

Emission Harness
Emission Control Vacuum Harness All Engines ..... Fig. 25 - 410

EGR System
Figure 25-210

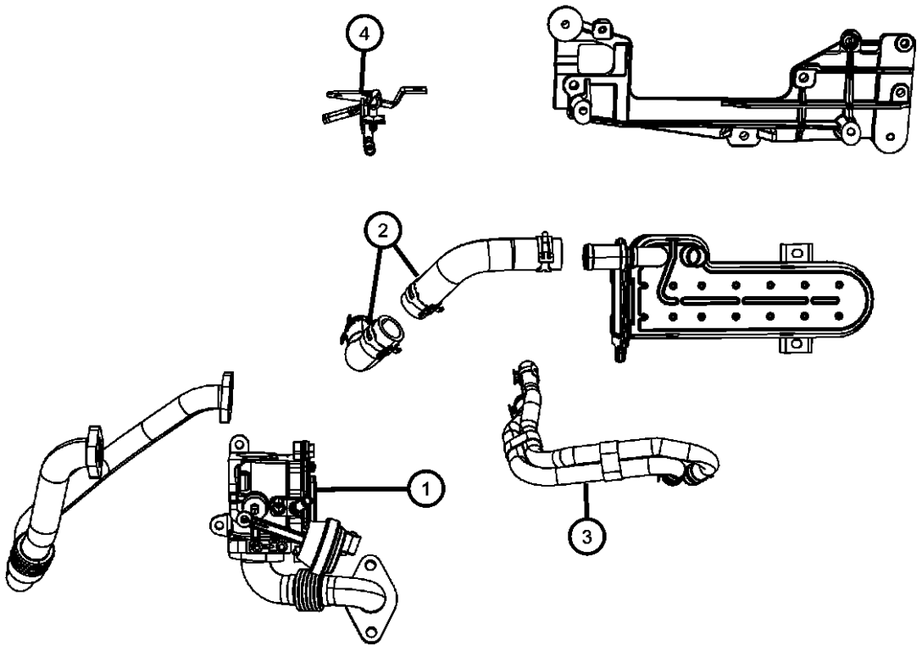

ITEM	PART NUMBER	QTY	LINE	SERIES	BODY	ENGINE	TRANS	TRIM	DESCRIPTION
1	68021528AA	1	J, T, U		49, 74	ECD			VALVE, EGR
2	05162001AA	1			49	ECD			HOSE
3	05162002AB	1	J, T, U		49, 74	ECD			HOSE, EGR Coolant, Supply and Return
4	05162003AA	1	J, T, U		49, 74	ECD			TUBE, Return

COMPASS/PATRIOT (MK)

SERIES	LINE	BODY	ENGINE	TRANSMISSION
H = HIGHLINE L = LOWLINE P = PREMIUM	J = JEEP - 4WD T = JEEP - 2WD	49 = HATCHBACK TYPE #2 74 = SPORT UTILITY 4-DR TYPE #4	ED3 = 2.4L 4 Cyl DOHC 16V Dual VVT Engine	DD7 = 5-Speed Manual T355 Transmission DEF = 6-Speed Manual Aisin BG6 Trans DAV = Continuously Variable Transmission DAW = Cont.Var. w/Off-Rd Crawl Ratio Trans

Vapor Canister and Leak Detection Pump
Figure 25-310

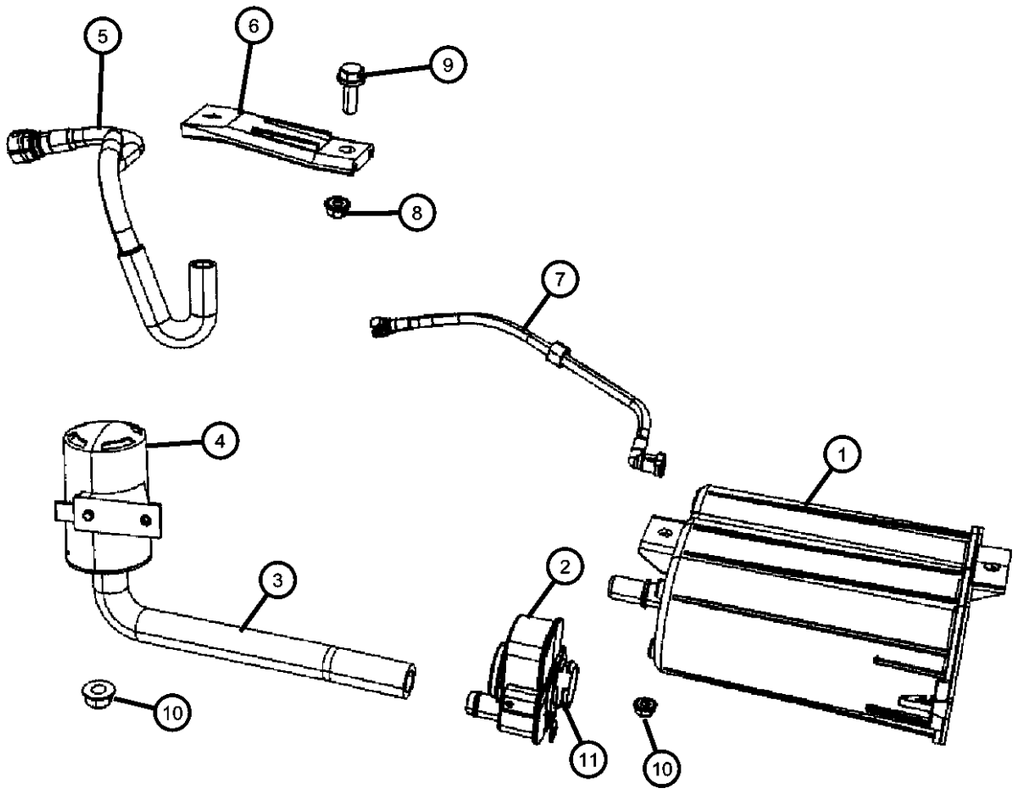

ITEM	PART NUMBER	QTY	LINE	SERIES	BODY	ENGINE	TRANS	TRIM	DESCRIPTION
1									CANISTER, Vapor
	05085110AC	1				ED3			FEDERAL EMISSIONS = CALIFORNIA EMISSIONS
		1	J		49				NEXT GEN MULTISTAGE FRONT AIR
	05273389AC	1				ED3			EXPORT EMISSIONS
2	04891685AA	1				ED3			DETECTOR, Evaporative System Integrity Module
3	05085118AB	1				ED3			HOSE, Canister to Vent Valve
4	05085164AA	1				ED3			FILTER, Leak Detection Pump
5	05273337AB	1				ECD			HOSE, Fuel Tank Vent Line
6	05105672AC	1				ED3			BRACKET, Vapor Canister
7	05273476AC	1				ED3			HOSE, Canister to Chassis Tube
8	06101445	1				ED3			NUT AND WASHER, Hex Nut-Coned Washer, M8 x 1.25, BRK TO CANISTER
9	06502847	1				ED3			SCREW AND WASHER, Hex Head, M8x1.25x25, BRK TO CANISTER
10									NUT, Hex
	05097674AA	1				ECD, ED3			FILTER TO RR RAIL
		2				ED3			CANISTER TO RR RAIL
11									SEAL, Vapor canister, Seal
	52129436AA	1	T		49, 74				[NA1]
		1	J, T, U		49	ECN, ED3			
		1	J, T, U		74	ECN, ED3			

COMPASS/PATRIOT (MK)

SERIES	LINE	BODY	ENGINE	TRANSMISSION
H = HIGHLINE L = LOWLINE P = PREMIUM	J = JEEP - 4WD T = JEEP - 2WD	49 = HATCHBACK TYPE #2 74 = SPORT UTILITY 4-DR TYPE #4	ED3 = 2.4L 4 Cyl DOHC 16V Dual VVT Engine	DD7 = 5-Speed Manual T355 Transmission DEF = 6-Speed Manual Aisin BG6 Trans DAV = Continuously Variable Transmission DAW = Cont.Var. w/Off-Rd Crawl Ratio Trans

Emission Control Vacuum Harness All Engines
Figure 25-410

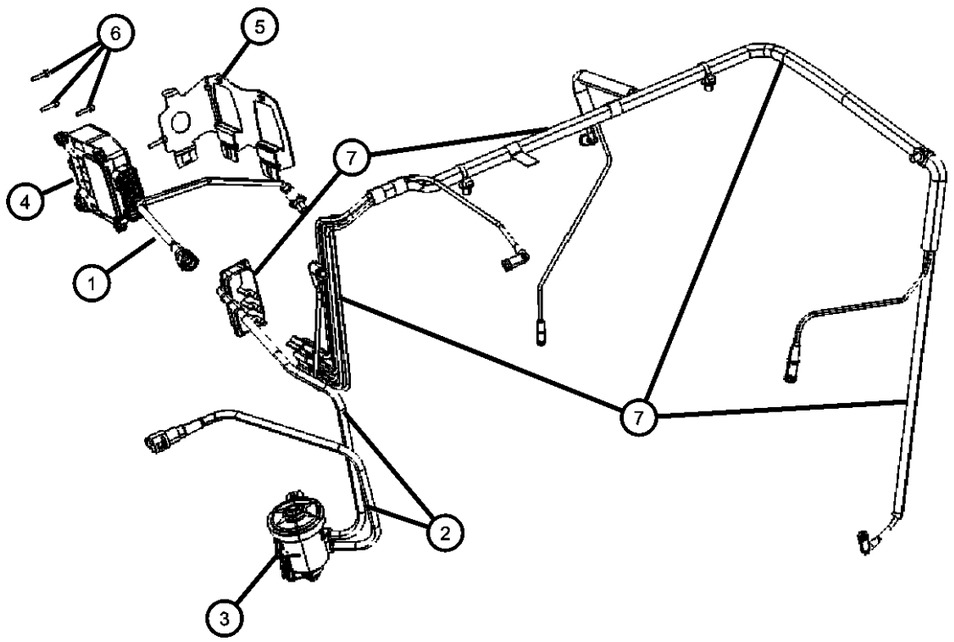

ITEM	PART NUMBER	QTY	LINE	SERIES	BODY	ENGINE	TRANS	TRIM	DESCRIPTION
1	05105798AA	1				ED3			HOSE, Proportional Purge Solenoid
2	05273420AA	1				ED3			HARNESS, Proportional Purge Solenoid
3	04669569	1	J, T, U		49, 74	ED3			SOLENOID, Proportional Purge
4	05105711AA	1				ECD			VALVE, Vacuum
5	05273317AB	1				ECD			BRACKET, Vacuum Valve
6	06508497AA	4				ECD			SCREW AND WASHER, Vacuum Block Bracket to Valve Block, M4x0.70x20.00
7	05273357AB	1				ECD			HARNESS, Vacuum

COMPASS/PATRIOT (MK)

SERIES	LINE	BODY	ENGINE	TRANSMISSION
H = HIGHLINE L = LOWLINE P = PREMIUM	J = JEEP - 4WD T = JEEP - 2WD	49 = HATCHBACK TYPE #2 74 = SPORT UTILITY 4-DR TYPE #4	ED3 = 2.4L 4 Cyl DOHC 16V Dual VVT Engine	DD7 = 5-Speed Manual T355 Transmission DEF = 6-Speed Manual Aisin BG6 Trans DAV = Continuously Variable Transmission DAW = Cont.Var. w/Off-Rd Crawl Ratio Trans

AR = use ase required - = Non illustrrated part

Group - DMK

Doors and Related Parts

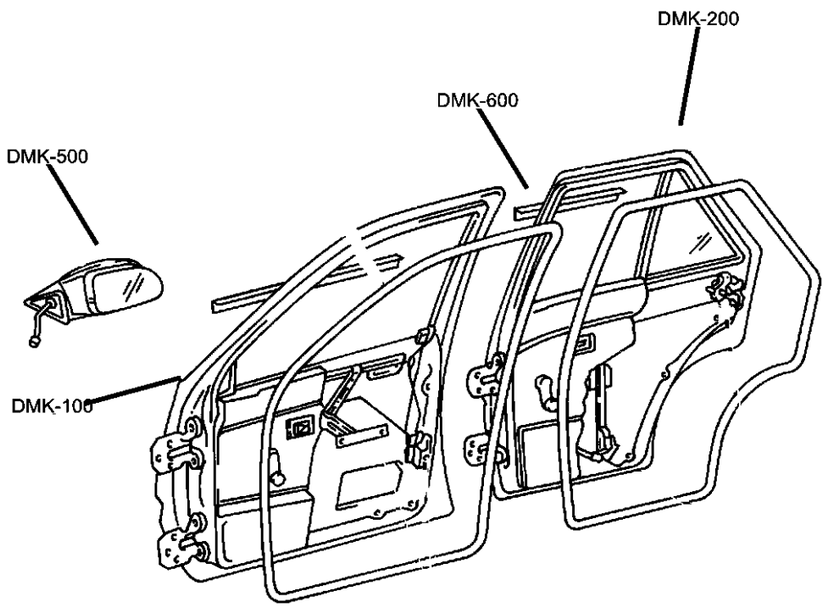

DMK-100 Front Door	DMK-200 Rear Door	DMK-500 Exterior Mirror	DMK-600 Weatherstrips and Seals
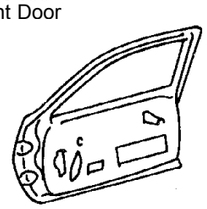	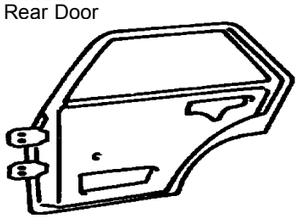	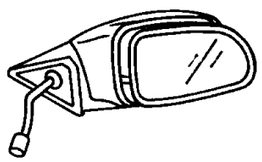	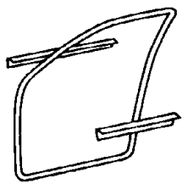

Group - DMK Doors and Related Parts

Illustration Title — Group-Fig. No.

Front Door
Front Door, Hinges, Handles, Regulators and Glass-49 ..... Fig. DMK - 110
Front Door, Hinges, Handles, Regulators and Glass-74 ..... Fig. DMK - 120

Rear Door
Rear Door, Hinges, Handles, Regulators and Glass-49 ..... Fig. DMK - 210
Rear Door, Hinges, Handles, Regulators and Glass-74 ..... Fig. DMK - 220

Exterior Mirror
Mirror, Exterior ..... Fig. DMK - 510

Weatherstrips and Seals
Front Door - 49 ..... Fig. DMK - 610
Front Door - 74 ..... Fig. DMK - 620
Rear Door - 49 ..... Fig. DMK - 630
Rear Door - 74 ..... Fig. DMK - 640
Liftgate and Hood ..... Fig. DMK - 650

Figure DMK-110

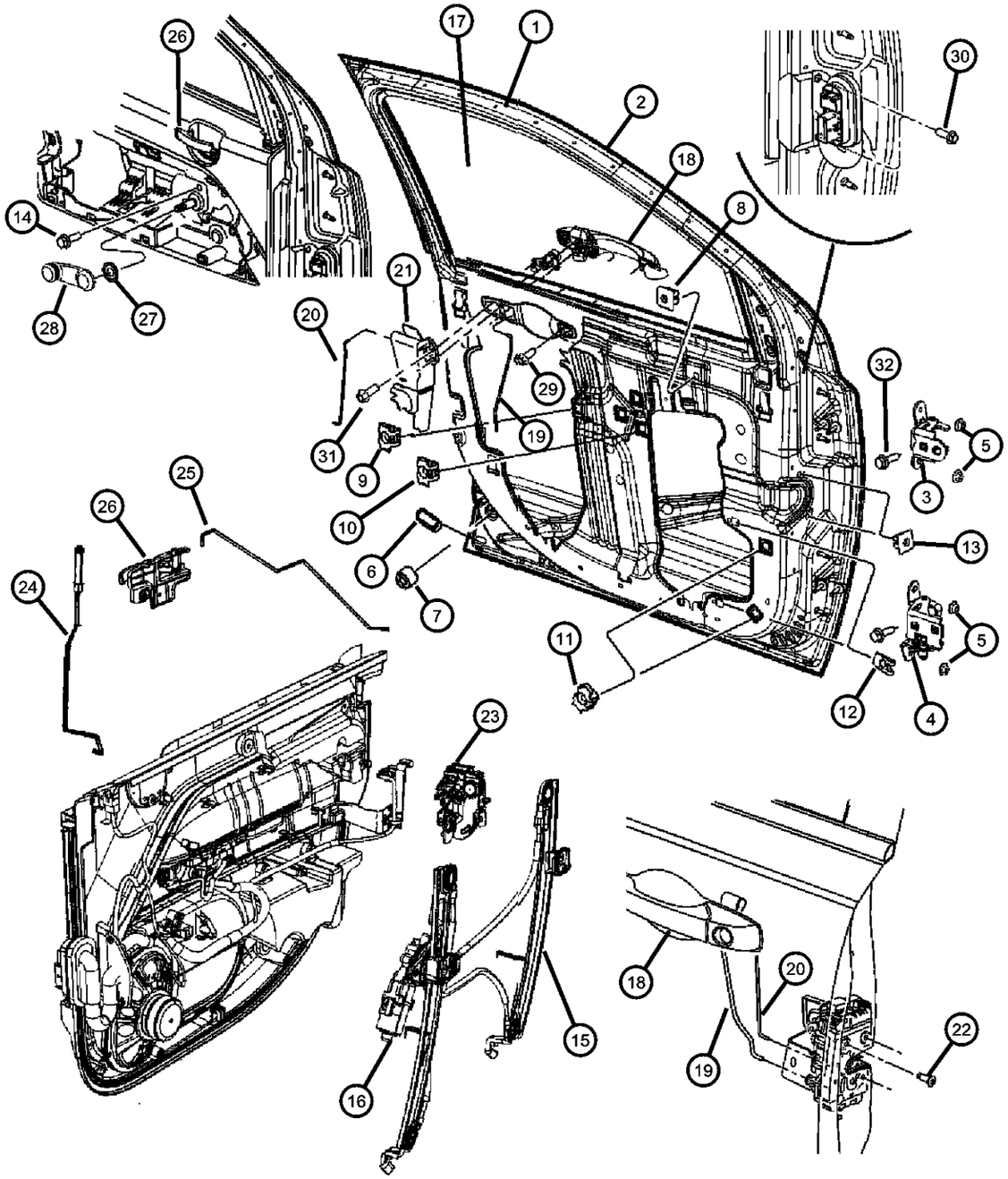

ITEM	PART NUMBER	QTY	LINE	SERIES	BODY	ENGINE	TRANS	TRIM	DESCRIPTION
1									DOOR, Front, Complete
	05074944AA	1	J, T, U		49				Right
	05074945AA	1	J, T, U		49				Left
2									PANEL, Front Door Outer
	05074946AA	1	J, T, U		49				Right
	05074947AA	1	J, T, U		49				Left
3									HINGE ASSY, Upper Door
	05074256AA	1							Right
	05074257AA	1							Left
4									HINGE ASSY, Lower Door
	05115712AE	1	J, T, U		49, 74				Right
	05115713AE	1	J, T, U		49, 74				Left
5	06101831	4							NUT, Hex Flange, M8x1.25
6	02895126	2							PLUG, Body, 1.25x.50
7	05160047AA	4							BUMPER, Door Overslam
8	06508506AA	2							NUT, Inside Remote Handle
9	06506955AA	2							NUT, Snap In, Pull Cup Bracket to Inner Panel
10	06506955AA	6							NUT, Snap In, Manual Regulator to Inner Panel
11	06506955AA	2							NUT, Snap In, Trim Panel to Front Corner
12	06508482AA	4							NUT, Speaker Attach to Inner Panel Clip
13	06508251AA	8							NUT, Door Grommet to Door
14	06105043AA	6							SCREW, Trim, Manual Regulator, To Inner Panel
15									REGULATOR
	05074936AA	1	J, T		49				Manual, Right
	05074937AA	1	J, T		49				Manual, Left
	68002896AA	1	J, T		49				Power, Right
		1	U		49				Power, Right
	68002897AA	1	U		49				Power, Left
		1	J, T		49				Power, Left
16									MOTOR, Window Regulator
	68002898AA	1	U		49				Right

COMPASS/PATRIOT (MK)

SERIES	LINE	BODY	ENGINE	TRANSMISSION
H = HIGHLINE L = LOWLINE P = PREMIUM	J = JEEP - 4WD T = JEEP - 2WD	49 = HATCHBACK TYPE #2 74 = SPORT UTILITY 4-DR TYPE #4	ED3 = 2.4L 4 Cyl DOHC 16V Dual VVT Engine	DD7 = 5-Speed Manual T355 Transmission DEF = 6-Speed Manual Aisin BG6 Trans DAV = Continuously Variable Transmission DAW = Cont.Var. w/Off-Rd Crawl Ratio Trans

AR = use ase required - = Non illustrrated part

<< RETURN TO GROUP INDEX

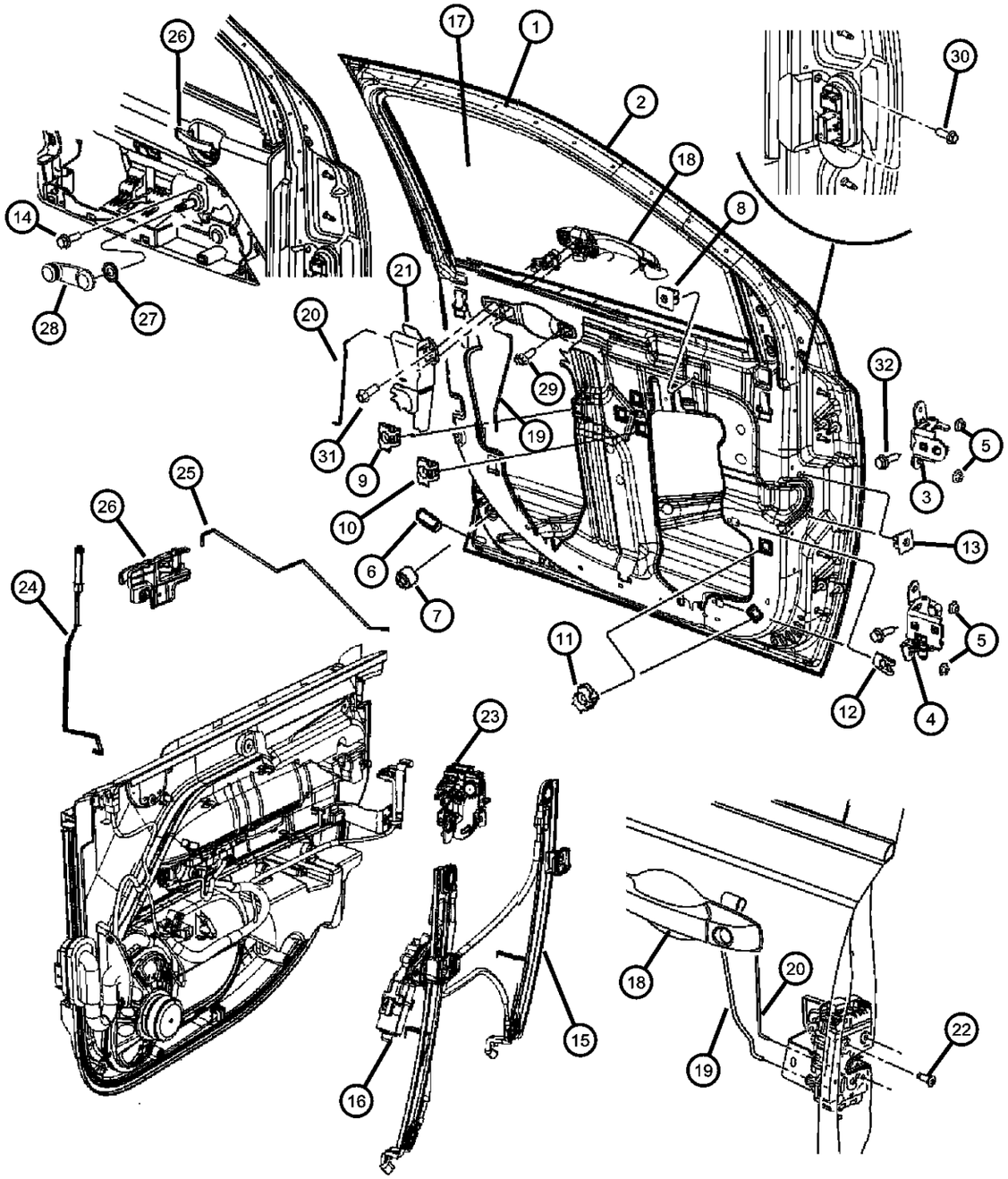

ITEM	PART NUMBER	QTY	LINE	SERIES	BODY	ENGINE	TRANS	TRIM	DESCRIPTION
		1	J, T		49				Right
	68002899AA	1	J, T		49				Left
		1	U		49				Left
17									GLASS, Front Door
	05074816AA	1							Right
	05074817AA	1							Left
18									HANDLE, Exterior Door
	04589297AD	1	U		49, 74				Left
	05074188AD	1	J, T, U		49, 74				With Key Cylinder, Right
	05074189AD	1	J, T		49, 74				Left
	05074194AD	1	J, T, U		49, 74				Without Key Cylinder, Right
19									LINK, Outside Handle To Latch, Front Door
	05115822AB	1	J, T		49				Right
	05115823AB	1	J, T		49				Left
	05160244AA	1	U		49				Right
	05160245AA	1	U		49				Left
20									LINK, KEY CYLINDER TO LATCH, Front Door
	05115820AA	1	J, T, U		49				Right
	05115821AA	1	T, U, J		49				Left
21	05116429AC	1	U		49, 74				SHIELD, Lock Cylinder
22	06508313AA	6							SCREW, Latch to Door
23									LATCH, Front Door
	04589021AA	1							Without Power Locks, Left
	04589020AA	1							Without Power Locks, Right
	04589045AA	1							With Power Locks, Left
	04589046AB	1	J		49				With Power Locks, Right
	04589095AD	1	U		49				Left
	04589096AD	1	U		49				Right
24									KNOB AND PUSH ROD, Door Latch
	1DF66DX9AA	1	J, T		74				Right
		1	U		74				Right

COMPASS/PATRIOT (MK)

SERIES	LINE	BODY	ENGINE	TRANSMISSION
H = HIGHLINE L = LOWLINE P = PREMIUM	J = JEEP - 4WD T = JEEP - 2WD	49 = HATCHBACK TYPE #2 74 = SPORT UTILITY 4-DR TYPE #4	ED3 = 2.4L 4 Cyl DOHC 16V Dual VVT Engine	DD7 = 5-Speed Manual T355 Transmission DEF = 6-Speed Manual Aisin BG6 Trans DAV = Continuously Variable Transmission DAW = Cont.Var. w/Off-Rd Crawl Ratio Trans

Figure DMK-110

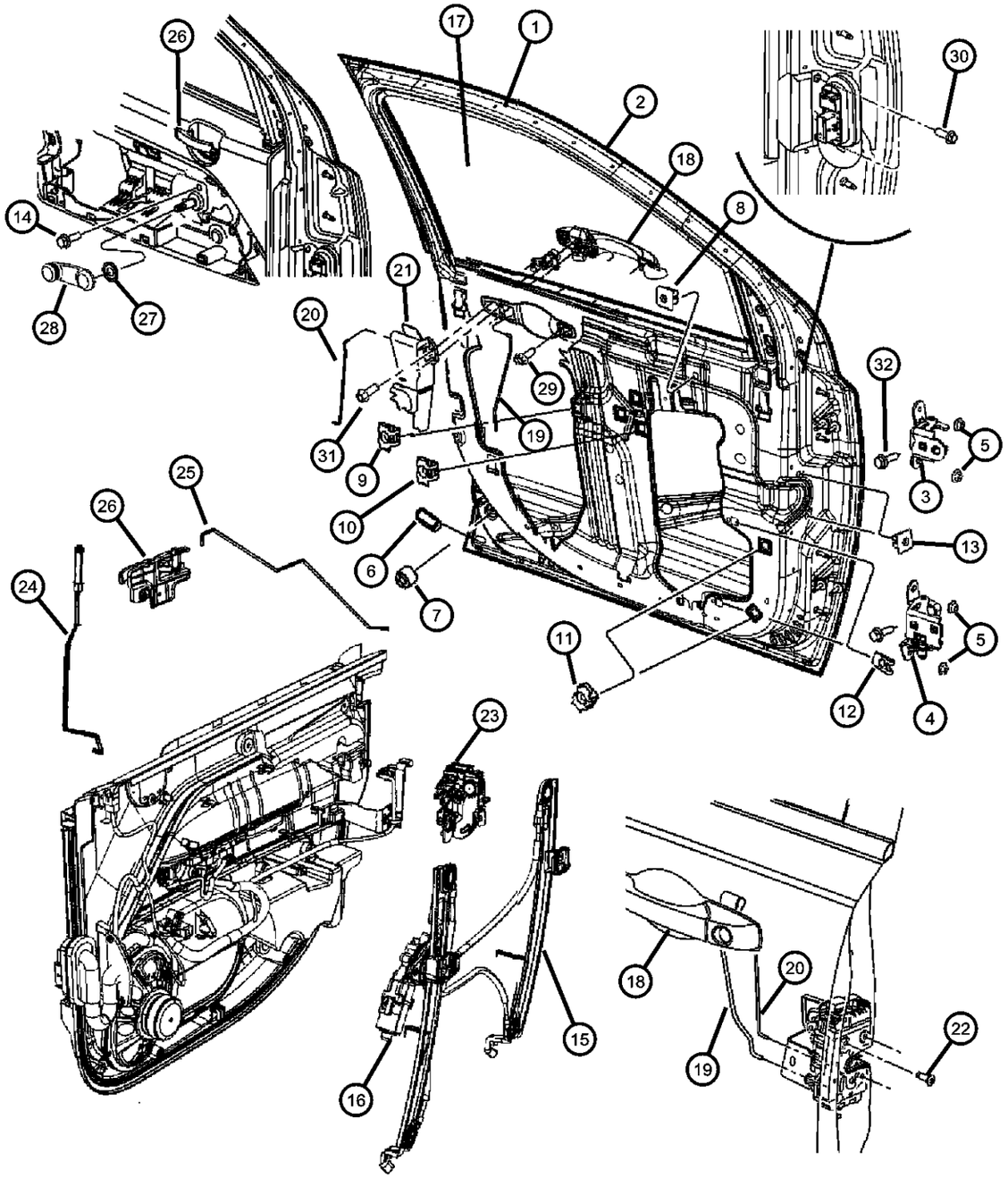

ITEM	PART NUMBER	QTY	LINE	SERIES	BODY	ENGINE	TRANS	TRIM	DESCRIPTION
	1DF67DX9AA	1	J, T		74				Left
		1	U		74				Left
25									LINK, Front Door Inside Remote Control to Latch
	05115864AA	1	J, T		49				Right
		1	U		49				Right
	05115865AA	1	J, T		74				Left
		1	U		74				Left
26									HANDLE, Inside Remote Control
	1BY92DK7AB	1	U		49				[KA], Right
		1	J, T		49				[KA], Right
	1BY92XDVAB	1	U		49				[DA], Right
		1	J, T		49				[DA], Right
	1BY93DK7AB	1	U		49				[KA], Left
		1	J, T		49				[KA], Left
	1BY93XDVAB	1	J, T		49				[DA], Left
		1	U		49				[DA], Left
27									SPACER, Window Regulator
	1CP82BDAAA	2	J, T, U		49, 74				[DA]
	1CP82DKAAA	2	J, T, U		49, 74				[KA]
28									HANDLE, Window Regulator
	0FW80BDA	1							[DA]
	0FW80DKA	1							[KA]
29	06508074AA	6							SCREW, Tapping, Handle to Door
30	06104567AA	2							SCREW, Door Grommet to Door
31	06102024	2	U		49, 74				SCREW, Hex Flange Head, M6x1.00x20.00
32	06507742AA	8							SCREW AND WASHER, Hex Head, M8x1.25x33, Hinge to Pillar

COMPASS/PATRIOT (MK)

SERIES	LINE	BODY	ENGINE	TRANSMISSION
H = HIGHLINE L = LOWLINE P = PREMIUM	J = JEEP - 4WD T = JEEP - 2WD	49 = HATCHBACK TYPE #2 74 = SPORT UTILITY 4-DR TYPE #4	ED3 = 2.4L 4 Cyl DOHC 16V Dual VVT Engine	DD7 = 5-Speed Manual T355 Transmission DEF = 6-Speed Manual Aisin BG6 Trans DAV = Continuously Variable Transmission DAW = Cont.Var. w/Off-Rd Crawl Ratio Trans

Front Door, Hinges, Handles, Regulators and Glass-74
Figure DMK-120

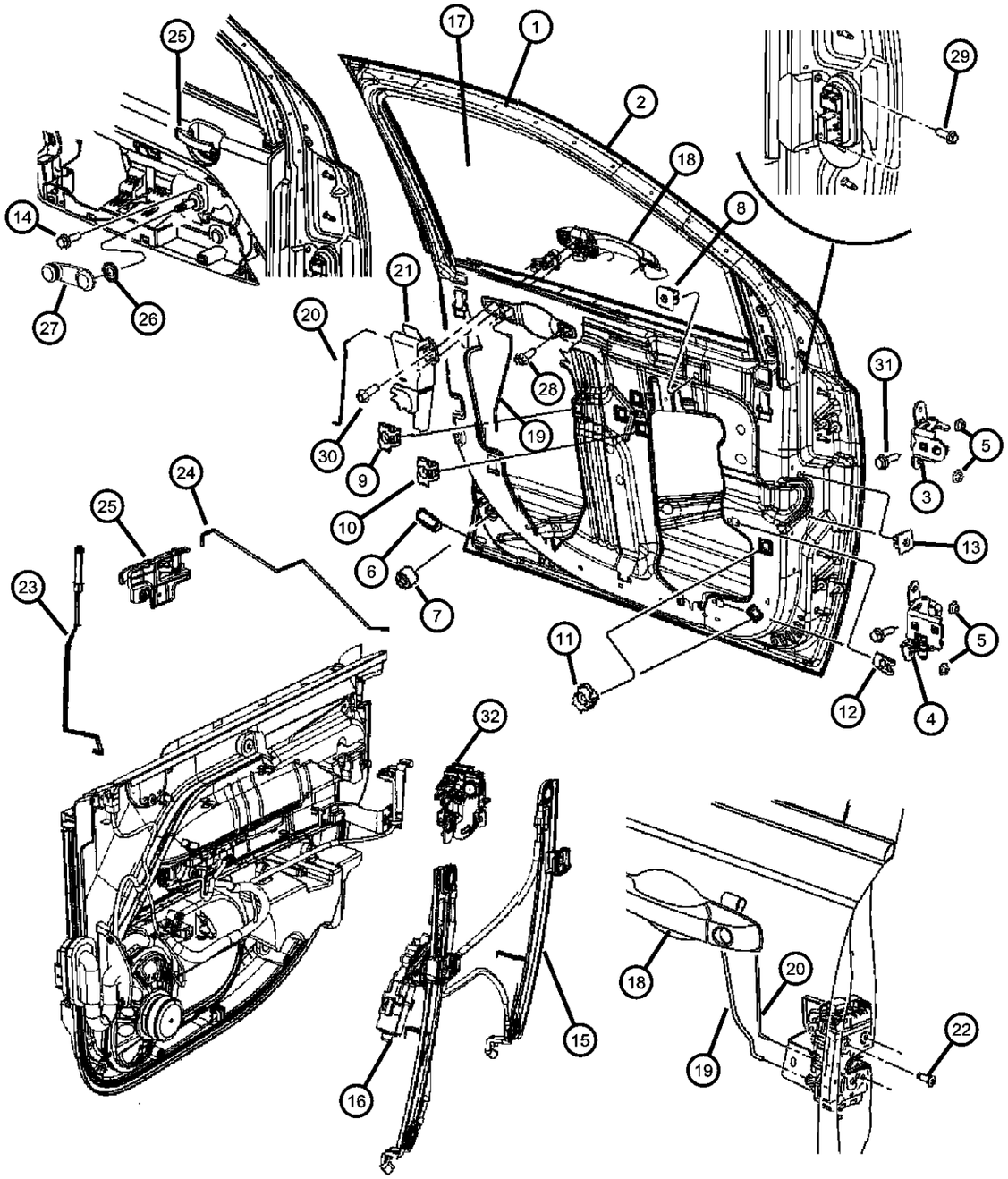

ITEM	PART NUMBER	QTY	LINE	SERIES	BODY	ENGINE	TRANS	TRIM	DESCRIPTION
1									DOOR, Front, Complete
	05067706AC	1	J, T, U		74				Right
	05067707AC	1	J, T, U		74				Left
2									PANEL, Front Door Outer
	05067702AB	1	J, T, U		74				Right
	05067703AB	1	J, T, U		74				Left
3									HINGE ASSY, Upper Door
	05074256AA	1							Right
	05074257AA	1							Left
4									HINGE ASSY, Lower Door
	05115712AE	1	J, T, U		49, 74				Right
	05115713AE	1	J, T, U		49, 74				Left
5	06101831	4							NUT, Hex Flange, M8x1.25
6	02895126	2							PLUG, Body, 1.25x.50
7	05160047AA	4							BUMPER, Door Overslam
8	06508506AA	2							NUT, Inside Remote Handle
9	06506955AA	2							NUT, Snap In, Pull Cup Bracket to Inner Panel
10	06506955AA	6							NUT, Snap In, Manual Regulator to Inner Panel
11	06506955AA	2							NUT, Snap In, Trim Panel to Front Corner
12	06508482AA	4							NUT, Speaker Attach to Inner Panel Clip
13	06508251AA	8							NUT, Door Grommet to Door
14	06105043AA	6							SCREW, Trim, Manual Regulator, To Inner Panel
15									REGULATOR
	05291800AA	1	J, T		74				Manual Locks, Right
	05291801AA	1	J, T		74				Manual Locks, Left
	68004422AA	1	J, T		74				Power Locks, Right
		1	U		74				Power Locks, Right
	68004423AA	1	J, T		74				Power Locks, Left
		1	U		74				Power Locks, Left
16									MOTOR, Window Regulator
	68002898AA	1	J, T		74				Right

COMPASS/PATRIOT (MK)

SERIES	LINE	BODY	ENGINE	TRANSMISSION
H = HIGHLINE L = LOWLINE P = PREMIUM	J = JEEP - 4WD T = JEEP - 2WD	49 = HATCHBACK TYPE #2 74 = SPORT UTILITY 4-DR TYPE #4	ED3 = 2.4L 4 Cyl DOHC 16V Dual VVT Engine	DD7 = 5-Speed Manual T355 Transmission DEF = 6-Speed Manual Aisin BG6 Trans DAV = Continuously Variable Transmission DAW = Cont.Var. w/Off-Rd Crawl Ratio Trans

AR = use ase required - = Non illustrrated part

Front Door, Hinges, Handles, Regulators and Glass-74
Figure DMK-120

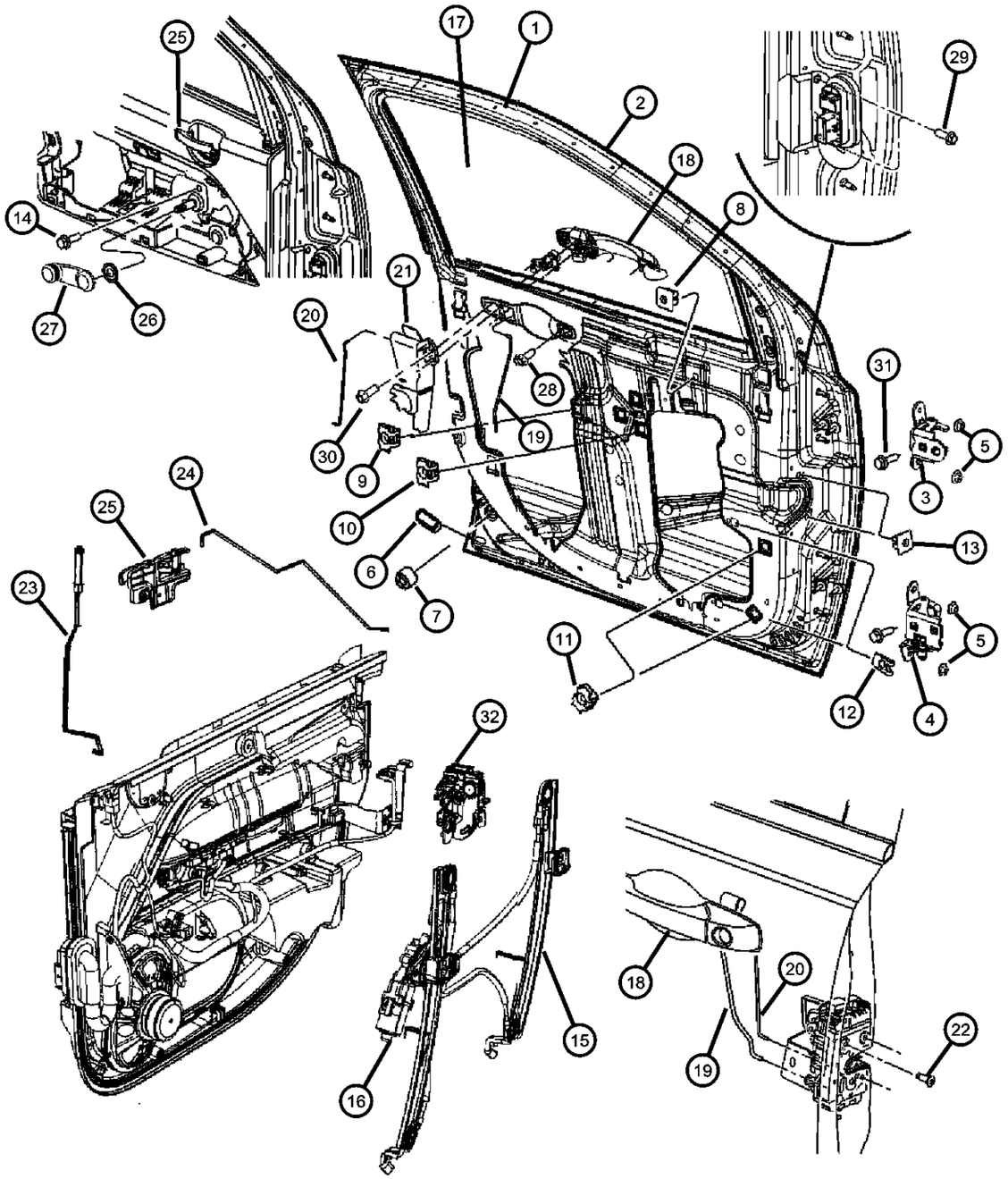

ITEM	PART NUMBER	QTY	LINE	SERIES	BODY	ENGINE	TRANS	TRIM	DESCRIPTION
		1	U		74				Right
	68002899AA	1	J, T		74				Left
		1	U		74				Left
17									GLASS, Front Door
	05155448AA	1	J, T, U		74				Right
	DD11300GTN								Collision Replacement Glass
	05155449AA	1	J, T, U		74				Left
	DD11301GTN								Collision Replacement Glass
18									HANDLE, Exterior Door
	04589297AD	1	U		49, 74				Export, With Key Cylinder, Left
	05074188AD	1	J, T, U		49, 74				With Key Cylinder, Right
	05074189AD	1	J, T		49, 74				With Key Cylinder, Left
	05074194AD	1	J, T, U		49, 74				Without Key Cylinder, Right
	05074195AD	1	J, T, U		74				Without Key Cylinder, Left
19									LINK, Outside Handle To Latch, Front Door
	05116422AA	1	U		74				Right
	05116423AA	1	U		74				Left
	05155444AB	1	J, T		74				Right
	05155445AB	1	J, T		74				Left
20									LINK, KEY CYLINDER TO LATCH, Front Door
	05160076AA	1	J, T, U		74				Right
	05160077AA	1	J, T, U		74				Left
21	05116429AC	1	U		49, 74				SHIELD, Lock Cylinder
22	06508313AA	6							SCREW, Latch to Door
23									KNOB AND PUSH ROD, Door Latch
	1DF66DX9AA	1	J, T		74				Right
		1	U		74				Right
	1DF67DX9AA	1	J, T		74				Left
		1	U		74				Left
24									LINK, Front Door Inside Remote Control to Latch

COMPASS/PATRIOT (MK)

SERIES	LINE	BODY	ENGINE	TRANSMISSION
H = HIGHLINE L = LOWLINE P = PREMIUM	J = JEEP - 4WD T = JEEP - 2WD	49 = HATCHBACK TYPE #2 74 = SPORT UTILITY 4-DR TYPE #4	ED3 = 2.4L 4 Cyl DOHC 16V Dual VVT Engine	DD7 = 5-Speed Manual T355 Transmission DEF = 6-Speed Manual Aisin BG6 Trans DAV = Continuously Variable Transmission DAW = Cont.Var. w/Off-Rd Crawl Ratio Trans

Front Door, Hinges, Handles, Regulators and Glass-74
Figure DMK-120

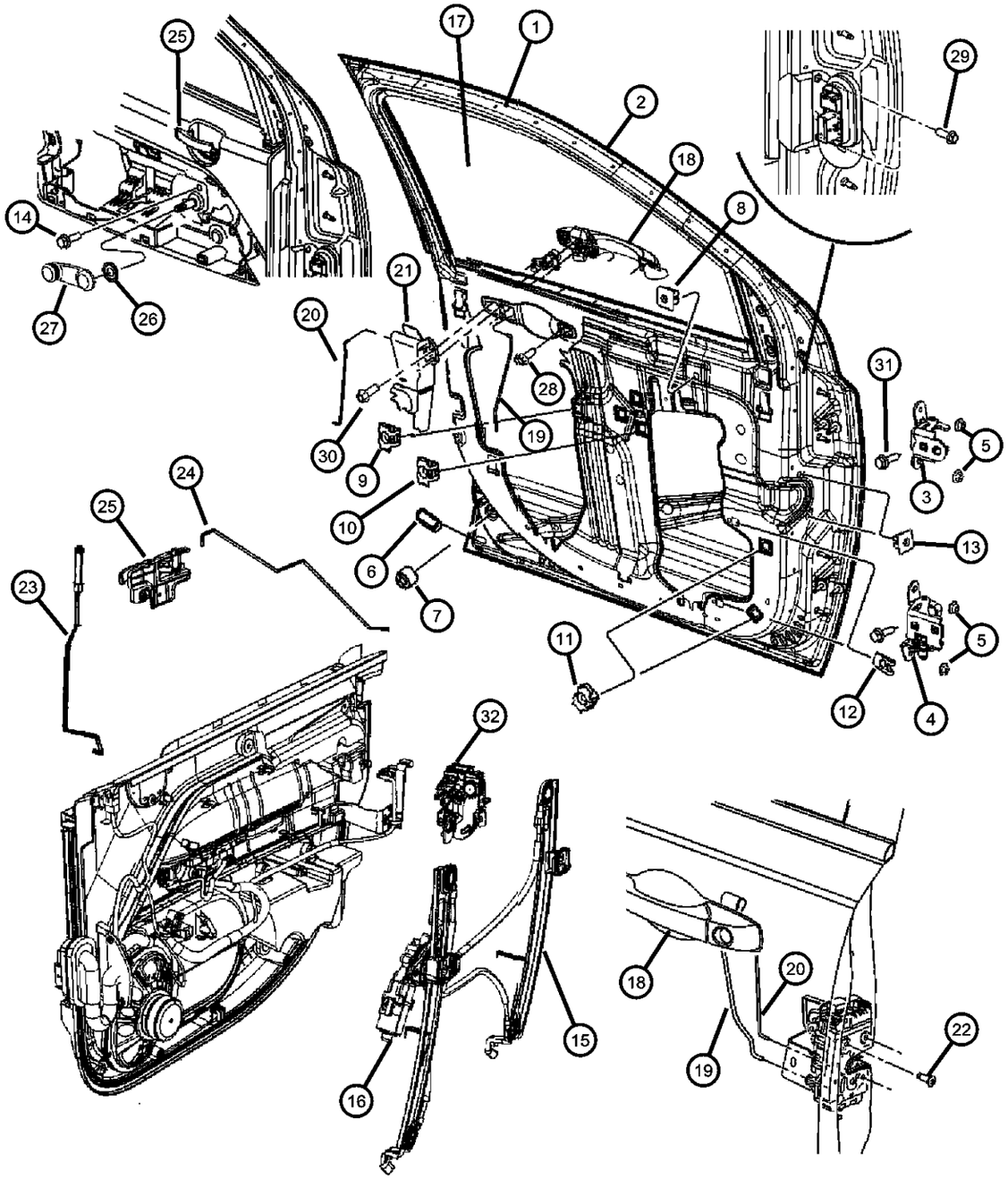

ITEM	PART NUMBER	QTY	LINE	SERIES	BODY	ENGINE	TRANS	TRIM	DESCRIPTION
	05115864AA	1	J, T		74				Right
		1	U		74				Right
	05115865AA	1	J, T		74				Left
		1	U		74				Left
25									HANDLE, Inside Remote Control
	1BY92DK7AA	1	J, T		74				[KA], Right
		1	U		74				[KA], Right
	1BY92XDVAA	1	U		74				[DA], Right
		1	J, T		74				[DA], Right
	1BY93DK7AA	1	U		74				[KA], Left
		1	J, T		74				[KA], Left
	1BY93XDVAA	1	U		74				[DA], Left
		1	J, T		74				[DA], Left
26									SPACER, Window Regulator
	1CP82BDAAA	2	J, T, U		49, 74				[DA]
	1CP82DKAAA	2	J, T, U		49, 74				[KA]
27									HANDLE, Window Regulator
	0FW80BDA	1							[DA]
	0FW80DKA	1							[KA]
28	06508074AA	6							SCREW, Tapping, Handle to Door
29	06104567AA	2							SCREW, Door Grommet to Door
30	06102024	2	U		49, 74				SCREW, Hex Flange Head, M6x1.00x20.00
31	06507742AA	8							SCREW AND WASHER, Hex Head, M8x1.25x33, Hinge to Pillar
32									LATCH, Front Door
	04589095AB	1	U		74				Left
	04589096AC	1	U		74				Right
	04589409AA	1	J, T		74				With Power Locks, Left
	04589410AA	1	J, T		74				Witht Manual Locks [JE8], Right
	04589411AA	1	J, T		74				Witht Manual Locks [JE8], Left
	04589416AA	1	J, T		74				With Power Locks, Right
-33									CLIP, Latch Link, White

COMPASS/PATRIOT (MK)

SERIES	LINE	BODY	ENGINE	TRANSMISSION
H = HIGHLINE L = LOWLINE P = PREMIUM	J = JEEP - 4WD T = JEEP - 2WD	49 = HATCHBACK TYPE #2 74 = SPORT UTILITY 4-DR TYPE #4	ED3 = 2.4L 4 Cyl DOHC 16V Dual VVT Engine	DD7 = 5-Speed Manual T355 Transmission DEF = 6-Speed Manual Aisin BG6 Trans DAV = Continuously Variable Transmission DAW = Cont.Var. w/Off-Rd Crawl Ratio Trans

AR = use ase required - = Non illustrrated part

Front Door, Hinges, Handles, Regulators and Glass-74
Figure DMK-120

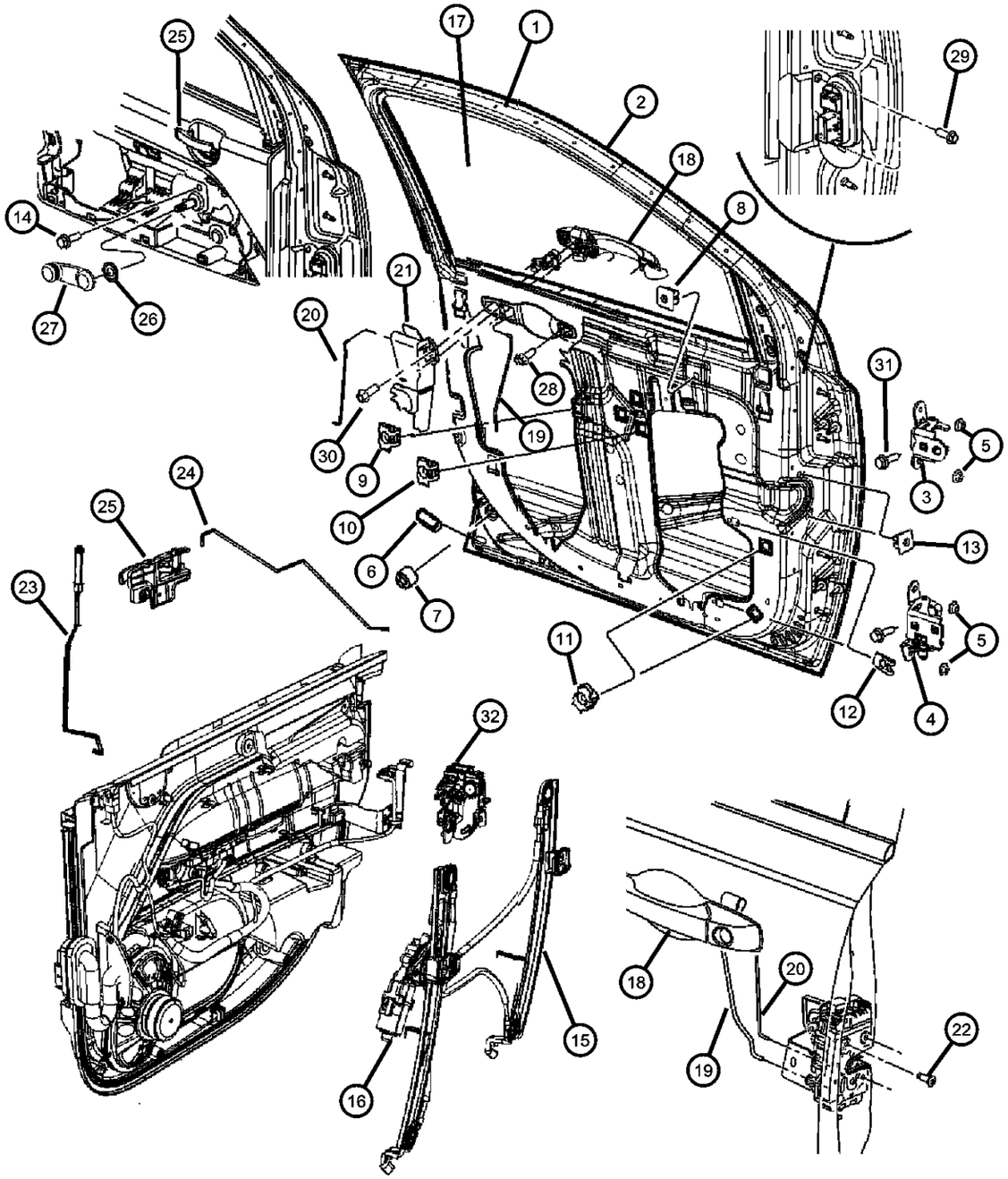

ITEM	PART NUMBER	QTY	LINE	SERIES	BODY	ENGINE	TRANS	TRIM	DESCRIPTION
	04658676	1	J, T		74				Power and Manual Latch, Left
		1	U		74				, Left
-34	06506804AA	1	U		74				CLIP, Latch Link, Light BlueLeft
-35	68015005AA	1	U		74				CLIP, Latch Link, Light GreenRight & Left
-36									CLIP, Latch Link, Red
	04658675	1	J, T		74				Power and Manual Latch, Left
		1	U		74				, Left
-37									CLIP, Latch Link, Yellow
	04589017AA	1	J, T		74				Power and Manual Latch, Right
		1	U		74				, Right
-38									CLIP, Latch Link, Red
	04658674	1	J, T		74				Power and Manual Latch, Right
		1	U		74				, Right
-39	04658445	1	J, T		74				CLIP, Latch Link, Orange, Power and Manual Latch, Left
-40	04724214	1	J, T		74				CLIP, Latch Link, Tan, Power and Manual Latch, Left
-41	04724215	1	J, T		74				CLIP, Latch Link, Brown, Power and Manual Latch, Right
-42	04658444	1	J, T		74				CLIP, Latch Link, Purple, Manual Latch, Right

COMPASS/PATRIOT (MK)

SERIES	LINE	BODY	ENGINE	TRANSMISSION
H = HIGHLINE L = LOWLINE P = PREMIUM	J = JEEP - 4WD T = JEEP - 2WD	49 = HATCHBACK TYPE #2 74 = SPORT UTILITY 4-DR TYPE #4	ED3 = 2.4L 4 Cyl DOHC 16V Dual VVT Engine	DD7 = 5-Speed Manual T355 Transmission DEF = 6-Speed Manual Aisin BG6 Trans DAV = Continuously Variable Transmission DAW = Cont.Var. w/Off-Rd Crawl Ratio Trans

Figure DMK-210

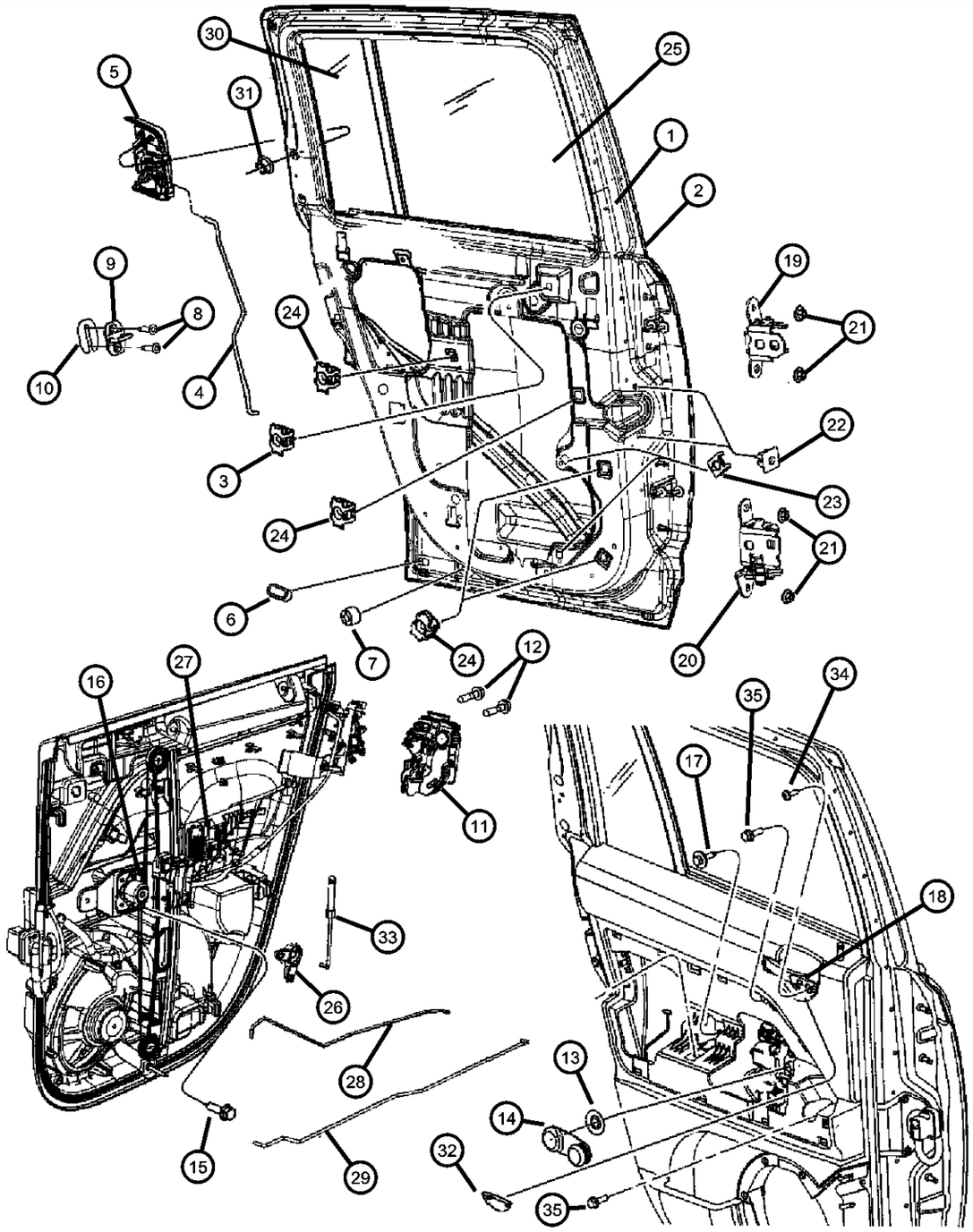

ITEM	PART NUMBER	QTY	LINE	SERIES	BODY	ENGINE	TRANS	TRIM	DESCRIPTION
1									DOOR, Rear
	05074958AA	1	J, T, U		49				Right
	05074959AA	1	J, T, U		49				Left
2									PANEL, Rear Door Outer
	05074961AB	1	J, T, U		49				Left
	05074960AB	1	J, T, U		49				Right
3	06508506AA	2							NUT
4									LINK, Outside Handle To Latch, Rear Door
	05115824AB	1	J, T		49				Right
	05115825AB	1	T, J		49				Left
	05160246AA	1	U		49				Right
	05160247AA	1	U		49				Left
5									HANDLE, Exterior Door
	05115826AD	1	J, T, U		49				Right
	05115827AD	1	J, T, U		49				Left
6	02895126	2							PLUG, Body, 1.25x.50
7	05160047AA	4							BUMPER, Door Overslam
8	06508312AA	4							SCREW, Torx Head, M8X1.25X34
9	04589050AA	2							STRIKER, Door Latch
10	55075483	AR							SPACER, Door Latch Striker
11									LATCH, Rear Door
	04589412AA	1	J, T		49				Right, Manual
	04589413AA	1	J, T		49				Left, Manual
	04589414AA	1	J, T		49				Right, Power
	04589415AA	1	J, T		49				Left, Power
	04589418AA	1	U		49				Right
	04589419AA	1	U		49				Left
12	06507578AA	1	J		49				SCREW
13									SPACER, Window Regulator
	1CP82BDAAA	2	J, T, U		49, 74				[DA]
	1CP82DKAAA	2	J, T, U		49, 74				[KA]
14									HANDLE, Window Regulator

COMPASS/PATRIOT (MK)

SERIES	LINE	BODY	ENGINE	TRANSMISSION
H = HIGHLINE L = LOWLINE P = PREMIUM	J = JEEP - 4WD T = JEEP - 2WD	49 = HATCHBACK TYPE #2 74 = SPORT UTILITY 4-DR TYPE #4	ED3 = 2.4L 4 Cyl DOHC 16V Dual VVT Engine	DD7 = 5-Speed Manual T355 Transmission DEF = 6-Speed Manual Aisin BG6 Trans DAV = Continuously Variable Transmission DAW = Cont.Var. w/Off-Rd Crawl Ratio Trans

AR = use ase required - = Non illustrrated part

<< RETURN TO GROUP INDEX

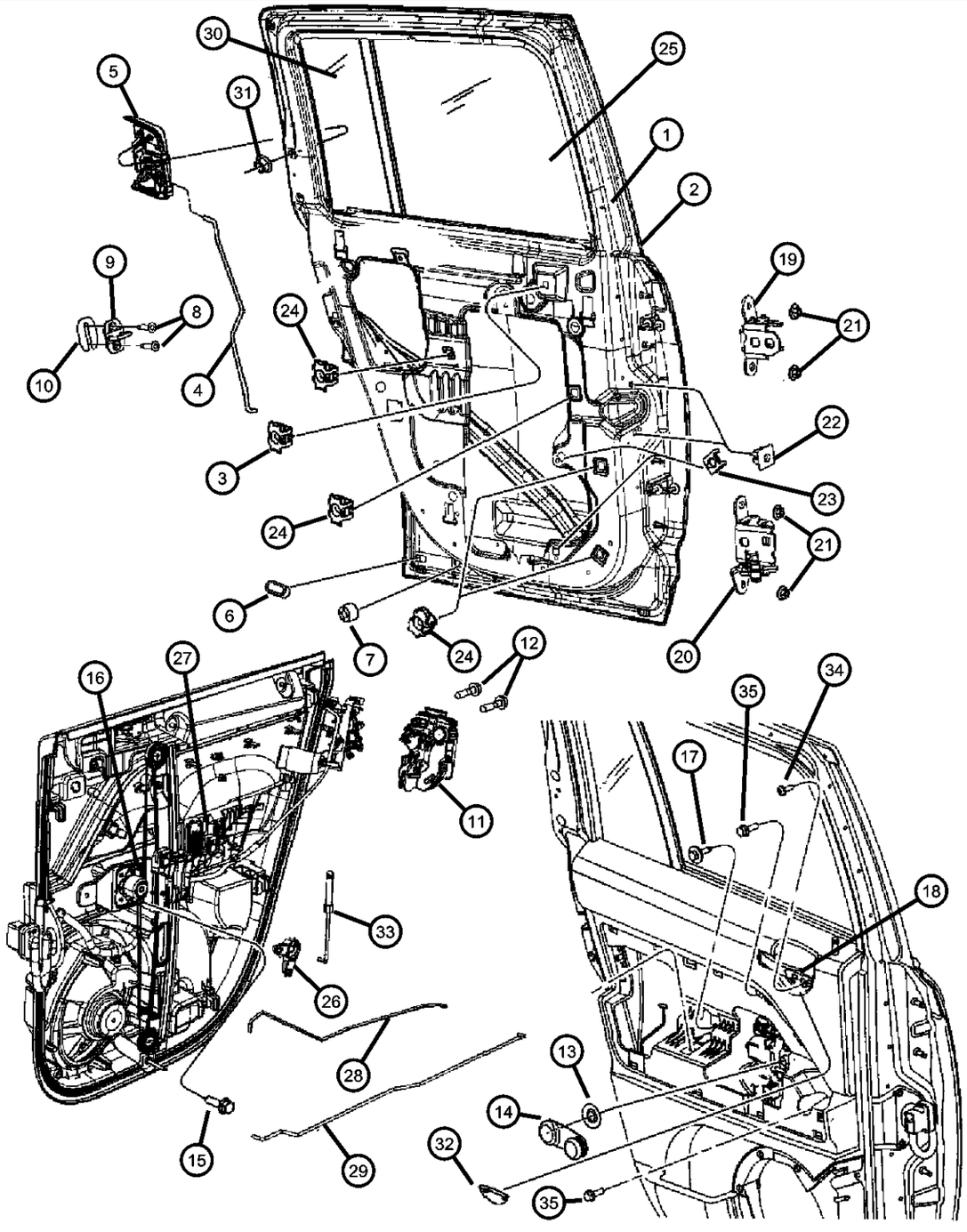

ITEM	PART NUMBER	QTY	LINE	SERIES	BODY	ENGINE	TRANS	TRIM	DESCRIPTION
	0FW80BDA	1							[DA]
	0FW80DKA	1							[KA]
15	06105043AA	2							SCREW, Trim, Regulator Rail to Body
16									REGULATOR, Rear Door Window
	05074938AA	1	J, T		49				Right, Manual
	05074939AA	1	J, T		49				Left, Manual
	68002888AA	1	J, T		49				Right, Power
		1	U		49				Right, Power
	68002889AA	1	J, T		49				Left, Power
		1	U		49				Left, Power
17	06105099AA	2	J, T, U		49, 74				SCREW, Pull Cup Bracket to Door Panel
18									HANDLE, Inside Remote Control
	1BY92DK7AA	1							Right
	1BY92XDVAA	1							[DA], Right
	1BY93DK7AA	1							[KA], Left
	1BY93XDVAA	1							[DA], Left
19									HINGE ASSY, Upper Door
	05074256AA	1							Right
	05074257AA	1							Left
20									HINGE ASSY, Lower Door
	05115712AE	1	J, T, U		49, 74				Right
	05115713AE	1	J, T, U		49, 74				Left
21	06101831	4							NUT, Hex Flange, M8x1.25
22	06508251AA	8							NUT
23	06508482AA	4							NUT, Speaker Attach
24									NUT, Snap In
	06506955AA	4							Door Trim to Body
		2							Manual Window Regulator to Inner Panel
		2							Pull Cup Bracket to Inner Panel
25									GLASS, Rear Door
	05074224AA	1							Sunsreen, Right

COMPASS/PATRIOT (MK)

SERIES	LINE	BODY	ENGINE	TRANSMISSION
H = HIGHLINE L = LOWLINE P = PREMIUM	J = JEEP - 4WD T = JEEP - 2WD	49 = HATCHBACK TYPE #2 74 = SPORT UTILITY 4-DR TYPE #4	ED3 = 2.4L 4 Cyl DOHC 16V Dual VVT Engine	DD7 = 5-Speed Manual T355 Transmission DEF = 6-Speed Manual Aisin BG6 Trans DAV = Continuously Variable Transmission DAW = Cont.Var. w/Off-Rd Crawl Ratio Trans

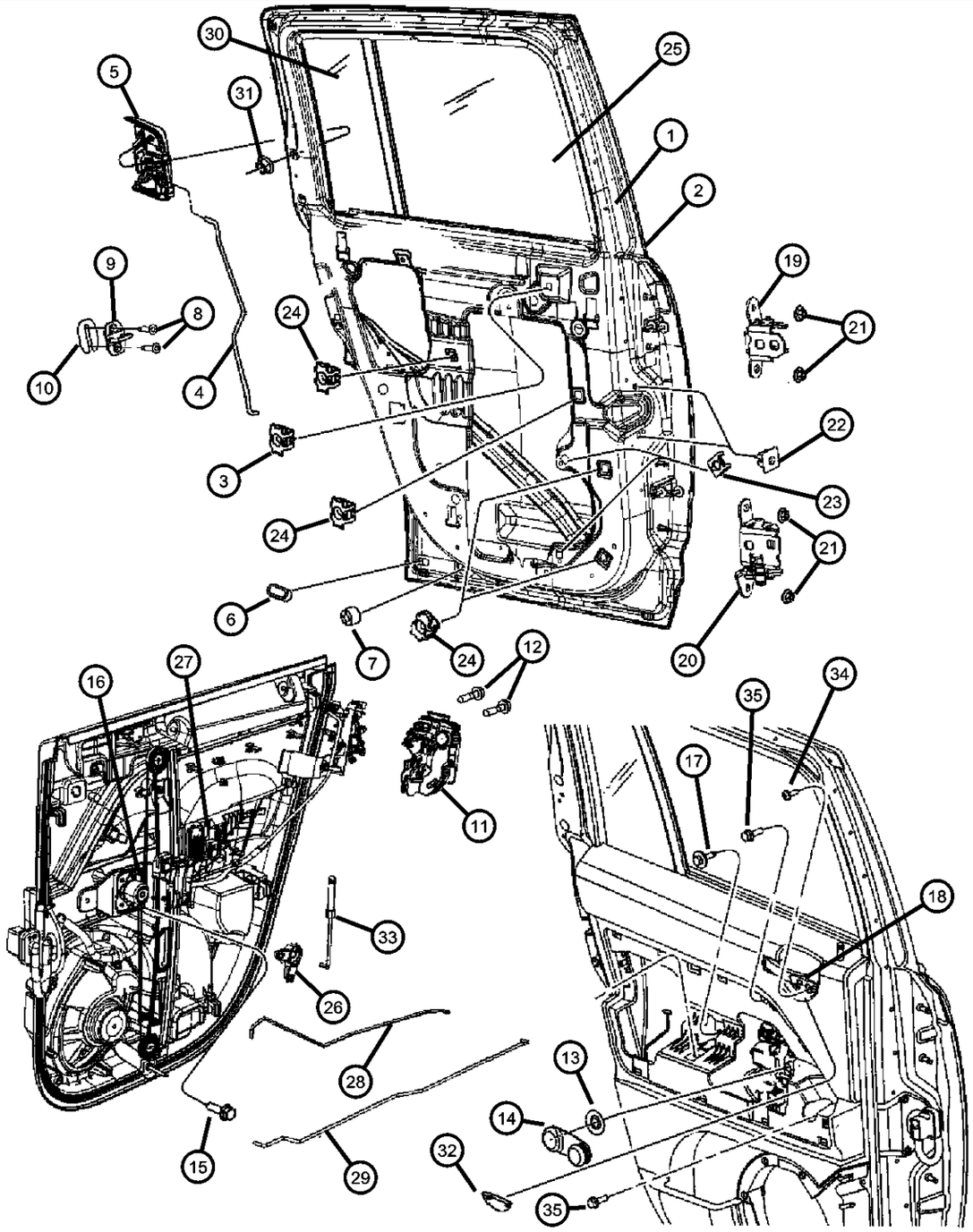

ITEM	PART NUMBER	QTY	LINE	SERIES	BODY	ENGINE	TRANS	TRIM	DESCRIPTION
	DD11183YPN								Collision Replacement Glass
	05074225AA	1							Sunsreen, Left
	DD11184YPN								Collision Replacement Glass
	05074818AA	1							Tinted, Right
	DD11183GTN								Collision Replacement Glass
	05074819AA	1							Tinted, Left
	DD11184GTN								Collision Replacement Glass
26	04589104AA	1							BELLCRANK, Outside Door Handle
27									MOTOR, Window Regulator
	68002890AA	1	J, T		49				Right
	68002891AA	1	J, T		49				Left
		1	U		49				Left
		1	U		49				Right
28									LINK, Inside handle To Latch, Rear Door
	05115866AA	1	J, T		49				Right
		1	U		49				Right
	05115867AA	1	J, T		49				Left
		1	U		49				Left
29									LINK AND SLEEVE, Rear Door Inside Remote to Latch
	05160018AA	1	J, T		49				
		1	U		49				
30									WEATHERSTRIP, Door Glass Run with Glass, Rear Door, Includes Glass
	05074661AC	1	J, T, U		49				Tinted, Left
	DV11186GTY								Collision Replacement Glass
	05160064AC	1	J, T, U		49				Sunscreen, Right
	DV11185YPY								Collision Replacement Glass
	05160065AC	1	J, T, U		49				Sunscreen, Left
	DV11186YPY								Collision Replacement Glass
	05074660AC	1	J, T, U		49				Tinted, Right
	DV11185GTY								Collision Replacement Glass

COMPASS/PATRIOT (MK)

SERIES	LINE	BODY	ENGINE	TRANSMISSION
H = HIGHLINE L = LOWLINE P = PREMIUM	J = JEEP - 4WD T = JEEP - 2WD	49 = HATCHBACK TYPE #2 74 = SPORT UTILITY 4-DR TYPE #4	ED3 = 2.4L 4 Cyl DOHC 16V Dual VVT Engine	DD7 = 5-Speed Manual T355 Transmission DEF = 6-Speed Manual Aisin BG6 Trans DAV = Continuously Variable Transmission DAW = Cont.Var. w/Off-Rd Crawl Ratio Trans

AR = use ase required - = Non illustrrated part

<< RETURN TO GROUP INDEX

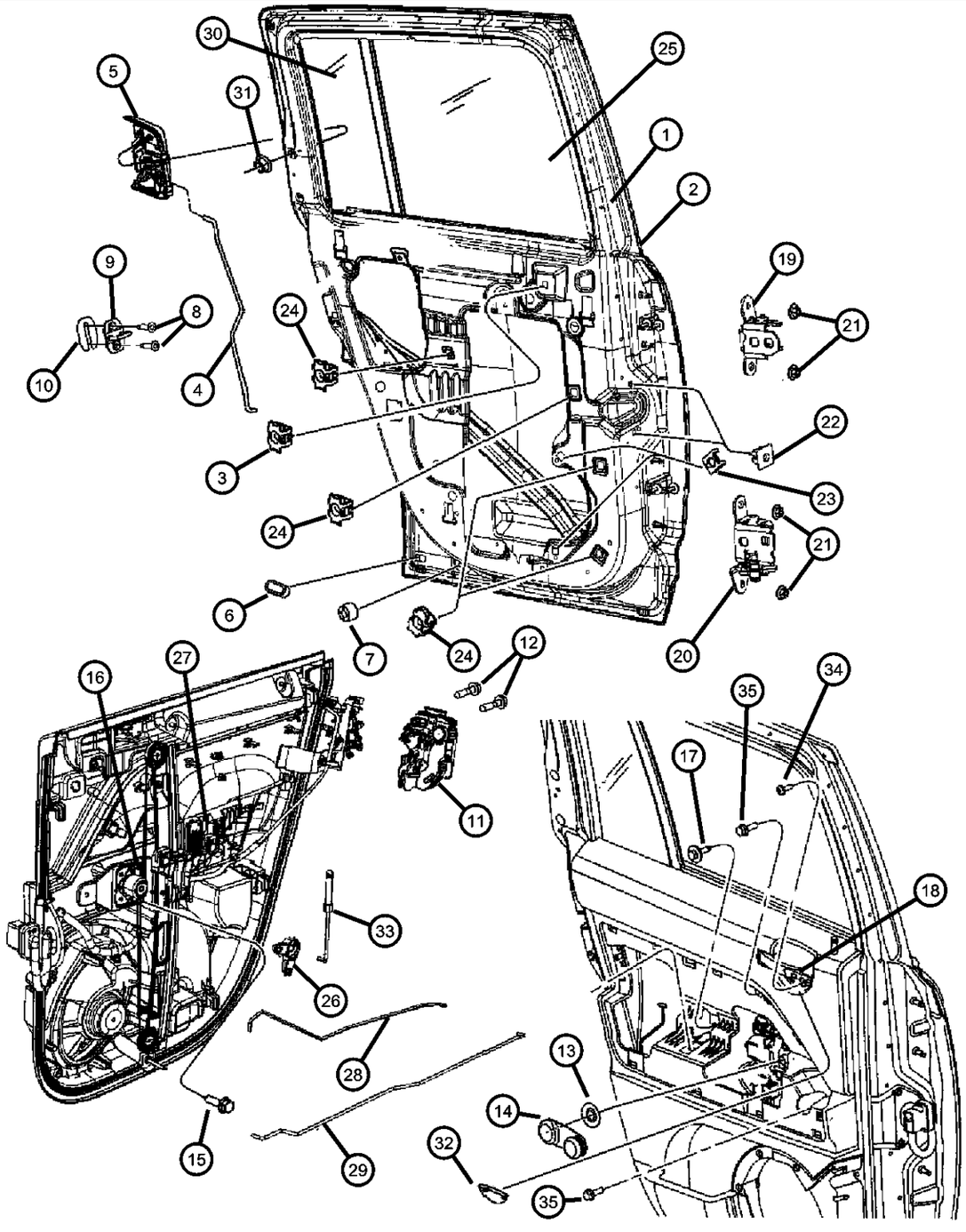

ITEM	PART NUMBER	QTY	LINE	SERIES	BODY	ENGINE	TRANS	TRIM	DESCRIPTION
31	06102398AA	4							NUT, Hex
32									PLUG, Door Trim Panel
	1BH30DK7AA	1	J, T, U		49, 74				[KA], Right
	1BH30XDVAA	1	J, T, U		49, 74				[DA], Right
	1BH31DK7AA	1	J, T, U		49, 74				[KA], Left
	1BH31XDVAA	1	J, T, U		49, 74				[DA], Left
33									KNOB AND PUSH ROD, Door Latch
	1AZ97DX9AA	1	J		49				
		1	J, T		49				
34	06104579AA	2							SCREW, Tapping, Handle to Sheet Metal
35	06104336AA	2							SCREW, Regulator Rail to Body

COMPASS/PATRIOT (MK)

SERIES	LINE	BODY	ENGINE	TRANSMISSION
H = HIGHLINE L = LOWLINE P = PREMIUM	J = JEEP - 4WD T = JEEP - 2WD	49 = HATCHBACK TYPE #2 74 = SPORT UTILITY 4-DR TYPE #4	ED3 = 2.4L 4 Cyl DOHC 16V Dual VVT Engine	DD7 = 5-Speed Manual T355 Transmission DEF = 6-Speed Manual Aisin BG6 Trans DAV = Continuously Variable Transmission DAW = Cont.Var. w/Off-Rd Crawl Ratio Trans

Rear Door, Hinges, Handles, Regulators and Glass-74
Figure DMK-220

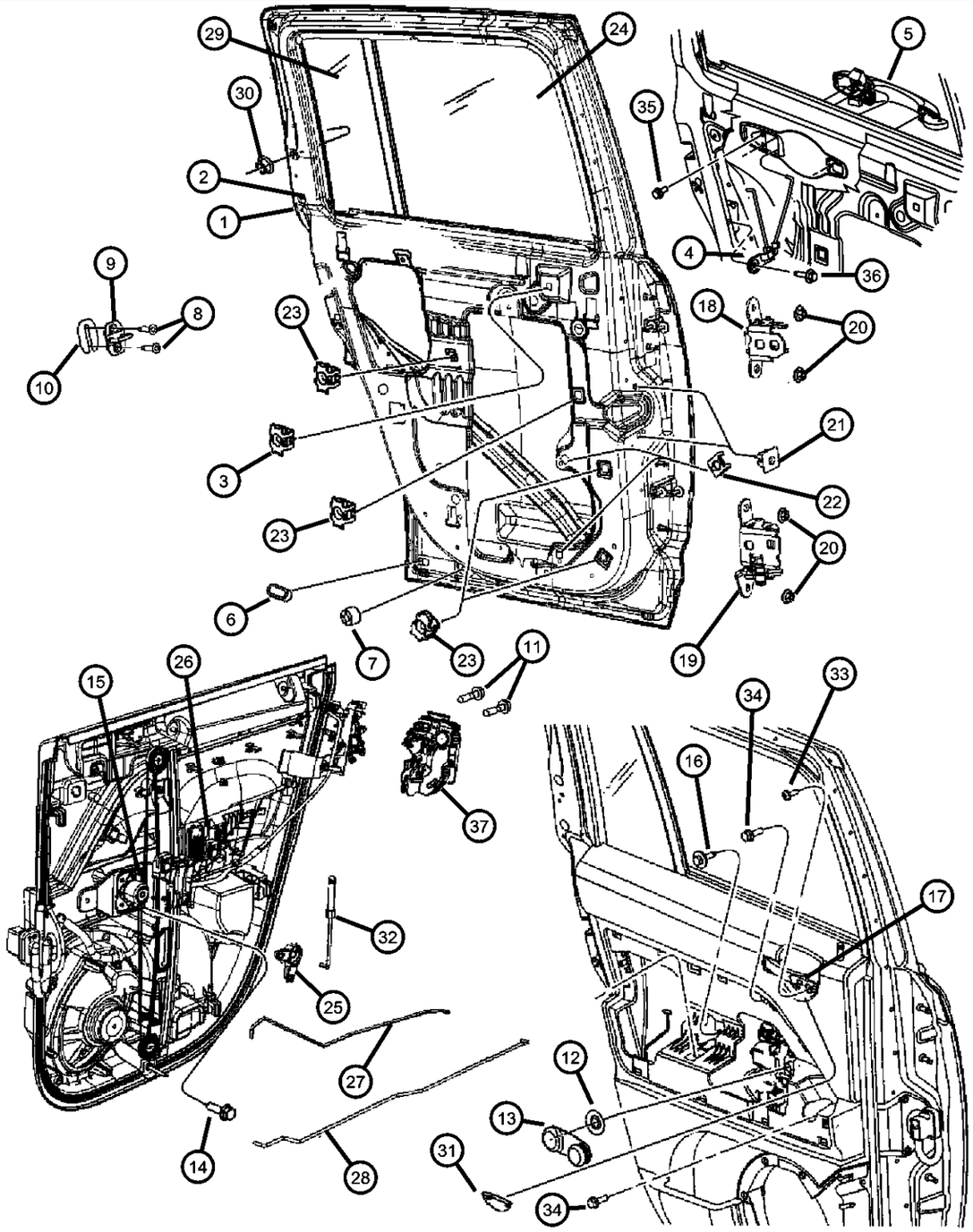

ITEM	PART NUMBER	QTY	LINE	SERIES	BODY	ENGINE	TRANS	TRIM	DESCRIPTION
1									DOOR, Rear
	05067712AC	1	J, T, U		74				Right
	05067713AC	1	J, T, U		74				Left
2									PANEL, Rear Door Outer
	05067714AB	1	J, T, U		74				Right
	05067715AB	1	J, T, U		74				Left
3	06508506AA	2							NUT
4									BELLCRANK, Outside Door Handle
	05116397AB	1	U		74				Left
	05116396AB	1	U		74				Right
	05160082AB	1	J, T		74				Right
	05160083AB	1	J, T		74				Left
5									HANDLE, Exterior Door
	05074194AD	1	J, T, U		74				Right
	05074195AD	1	J, T, U		74				Left
6	02895126	2							PLUG, Body, 1.25x.50
7	05160047AA	4							BUMPER, Door Overslam
8	06508312AA	4							SCREW, Torx Head, M8X1.25X34
9	04589050AA	2							STRIKER, Door Latch
10	55075483	AR							SPACER, Door Latch Striker
11	06508313AA	6							SCREW
12									SPACER, Window Regulator
	1CP82BDAAA	2	J, T, U		49, 74				[DA]
	1CP82DKAAA	2	J, T, U		49, 74				[KA]
13									HANDLE, Window Regulator
	0FW80BDA	1							[DA]
	0FW80DKA	1							[KA]
14	06105043AA	2							SCREW, Trim, Regulator Rail to Body
15									REGULATOR, Rear Door Window
	05291802AA	1	J, T		74				Manual locks, Right
	05291803AA	1	J, T		74				Manual locks, Left
	68002892AA	1	J, T		74				Power Locks, Right

COMPASS/PATRIOT (MK)

SERIES	LINE	BODY	ENGINE	TRANSMISSION
H = HIGHLINE L = LOWLINE P = PREMIUM	J = JEEP - 4WD T = JEEP - 2WD	49 = HATCHBACK TYPE #2 74 = SPORT UTILITY 4-DR TYPE #4	ED3 = 2.4L 4 Cyl DOHC 16V Dual VVT Engine	DD7 = 5-Speed Manual T355 Transmission DEF = 6-Speed Manual Aisin BG6 Trans DAV = Continuously Variable Transmission DAW = Cont.Var. w/Off-Rd Crawl Ratio Trans

AR = use ase required - = Non illustrrated part

<< RETURN TO GROUP INDEX

Rear Door, Hinges, Handles, Regulators and Glass-74
Figure DMK-220

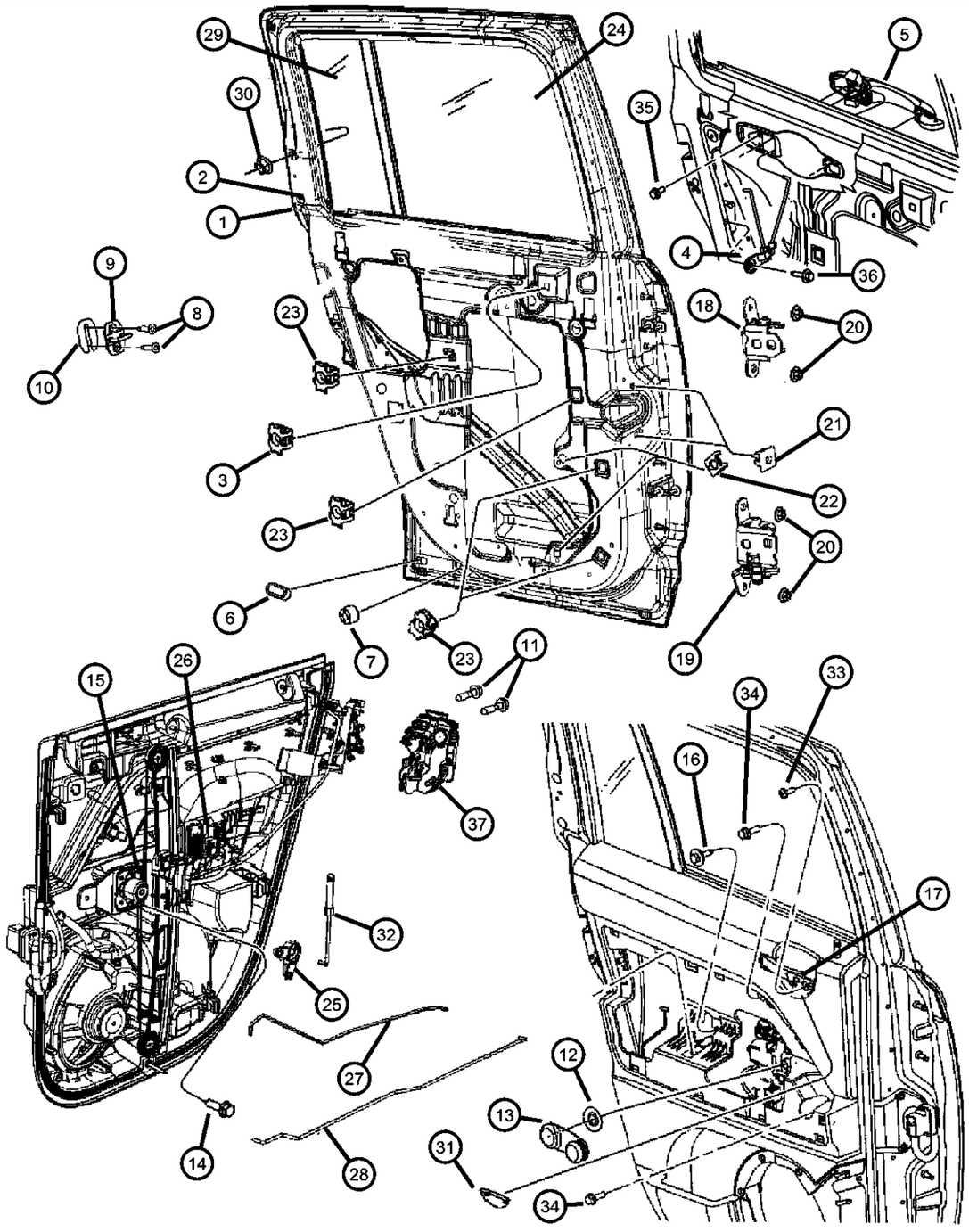

ITEM	PART NUMBER	QTY	LINE	SERIES	BODY	ENGINE	TRANS	TRIM	DESCRIPTION
	68002893AA	1	J, T		74				Power Locks, Left
16	06105099AA	2	J, T, U		49, 74				SCREW, Pull Cup Bracket to Door Panel
17									HANDLE, Inside Remote Control
	1BY92DK7AA	1							Right
	1BY92XDVAA	1							[DA], Right
	1BY93DK7AA	1							[KA], Left
	1BY93XDVAA	1							[DA], Left
18									HINGE ASSY, Upper Door
	05074257AA	1							Left
	05074256AA	1							Right
19									HINGE ASSY, Lower Door
	05115712AE	1	J, T, U		49, 74				Right
	05115713AE	1	J, T, U		49, 74				Left
20	06101831	4							NUT, Hex Flange, M8x1.25
21	06508251AA	8							NUT
22	06508482AA	4							NUT, Speaker Attach
23									NUT, Snap In
	06506955AA	4							Door Trim to Body
		2							Manual Window Regulator to Inner Panel
		2							Pull Cup Bracket to Inner Panel
24									GLASS, Rear Door
	05155450AA	1	J, T, U		74				Tinted, Right
	DD11302GTN								Collision Replacement Glass
	05155451AA	1	J, T, U		74				Tinted, Left
	DD11303GTN								Collision Replacement Glass
	05155454AA	1	J, T, U		74				Sunsreen, Right
	DD11302YPN								Collision Replacement Glass
	05155455AA	1	J, T, U		74				Sunsreen, Left
	DD11303YPN								Collision Replacement Glass
25	04589104AA	1							BELLCRANK, Outside Door Handle
26									MOTOR, Window Regulator

COMPASS/PATRIOT (MK)

SERIES	LINE	BODY	ENGINE	TRANSMISSION
H = HIGHLINE L = LOWLINE P = PREMIUM	J = JEEP - 4WD T = JEEP - 2WD	49 = HATCHBACK TYPE #2 74 = SPORT UTILITY 4-DR TYPE #4	ED3 = 2.4L 4 Cyl DOHC 16V Dual VVT Engine	DD7 = 5-Speed Manual T355 Transmission DEF = 6-Speed Manual Aisin BG6 Trans DAV = Continuously Variable Transmission DAW = Cont.Var. w/Off-Rd Crawl Ratio Trans

Figure DMK-220

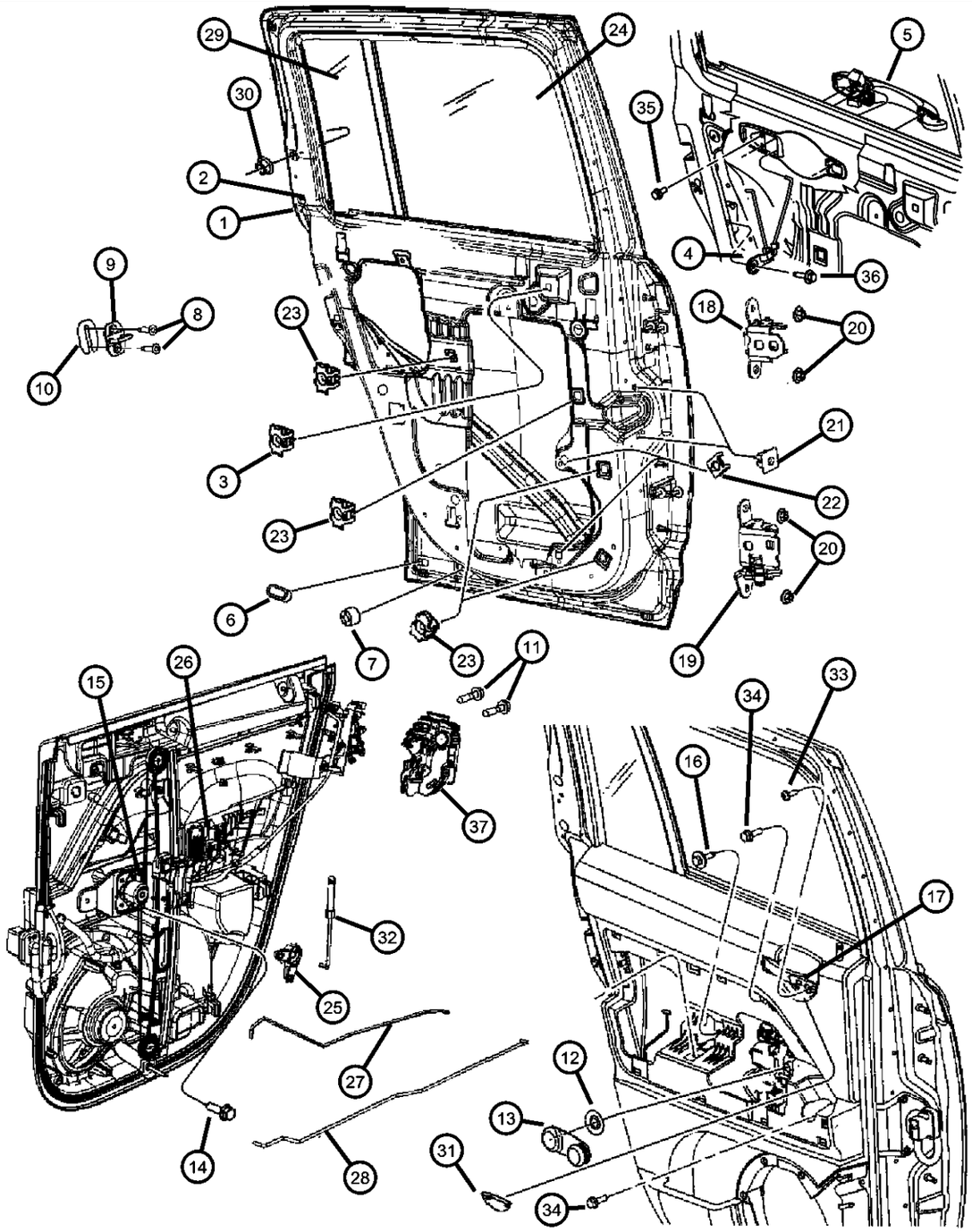

ITEM	PART NUMBER	QTY	LINE	SERIES	BODY	ENGINE	TRANS	TRIM	DESCRIPTION
	68002894AA	1	J, T		74				Right
	68002895AA	1	J, T		74				Left
27									LINK, Inside handle To Latch, Rear Door
	05115866AA	1	J, T		74				Right
		1	U		74				Right
	05115867AA	1	U		74				Left
		1	J, T		74				Left
28									LINK AND SLEEVE, Rear Door Inside Remote to Latch
	05160018AA	1	J, T		74				Right
		1	U		74				Right
	05160019AA	1	J, T		74				Left
		1	U		74				Left
29									WEATHERSTRIP, Rear Door Glass Run, Includes Glass
	05067770AA	1	J, T, U		74				Solar Tint, Right
	05067772AA	1	J, T, U		74				Privacy, Right
	05067773AA	1	J, T, U		74				Privacy, Left
	05067771AA	1	J, T, U		74				Solar Tint, Left
30	06102398AA	4							NUT, Hex
31									PLUG, Door Trim Panel
	1BH30DK7AA	1	J, T, U		49, 74				[KA], Right
	1BH30XDVAA	1	J, T, U		49, 74				[DA], Right
	1BH31DK7AA	1	J, T, U		49, 74				[KA], Left
	1BH31XDVAA	1	J, T, U		49, 74				[DA], Left
32									KNOB AND PUSH ROD, Door Latch
	1AZ97DX9AA	1	U		74				
		1	J, T		74				
33	06104579AA	2							SCREW, Tapping, Handle to Sheet Metal
34	06104336AA	2							SCREW, Regulator Rail to Body
35	06508074AA	6							SCREW, Tapping
36	06507872AA	2			74				SCREW

COMPASS/PATRIOT (MK)

SERIES	LINE	BODY	ENGINE	TRANSMISSION
H = HIGHLINE L = LOWLINE P = PREMIUM	J = JEEP - 4WD T = JEEP - 2WD	49 = HATCHBACK TYPE #2 74 = SPORT UTILITY 4-DR TYPE #4	ED3 = 2.4L 4 Cyl DOHC 16V Dual VVT Engine	DD7 = 5-Speed Manual T355 Transmission DEF = 6-Speed Manual Aisin BG6 Trans DAV = Continuously Variable Transmission DAW = Cont.Var. w/Off-Rd Crawl Ratio Trans

AR = use ase required - = Non illustrrated part

<< RETURN TO GROUP INDEX

Figure DMK-220

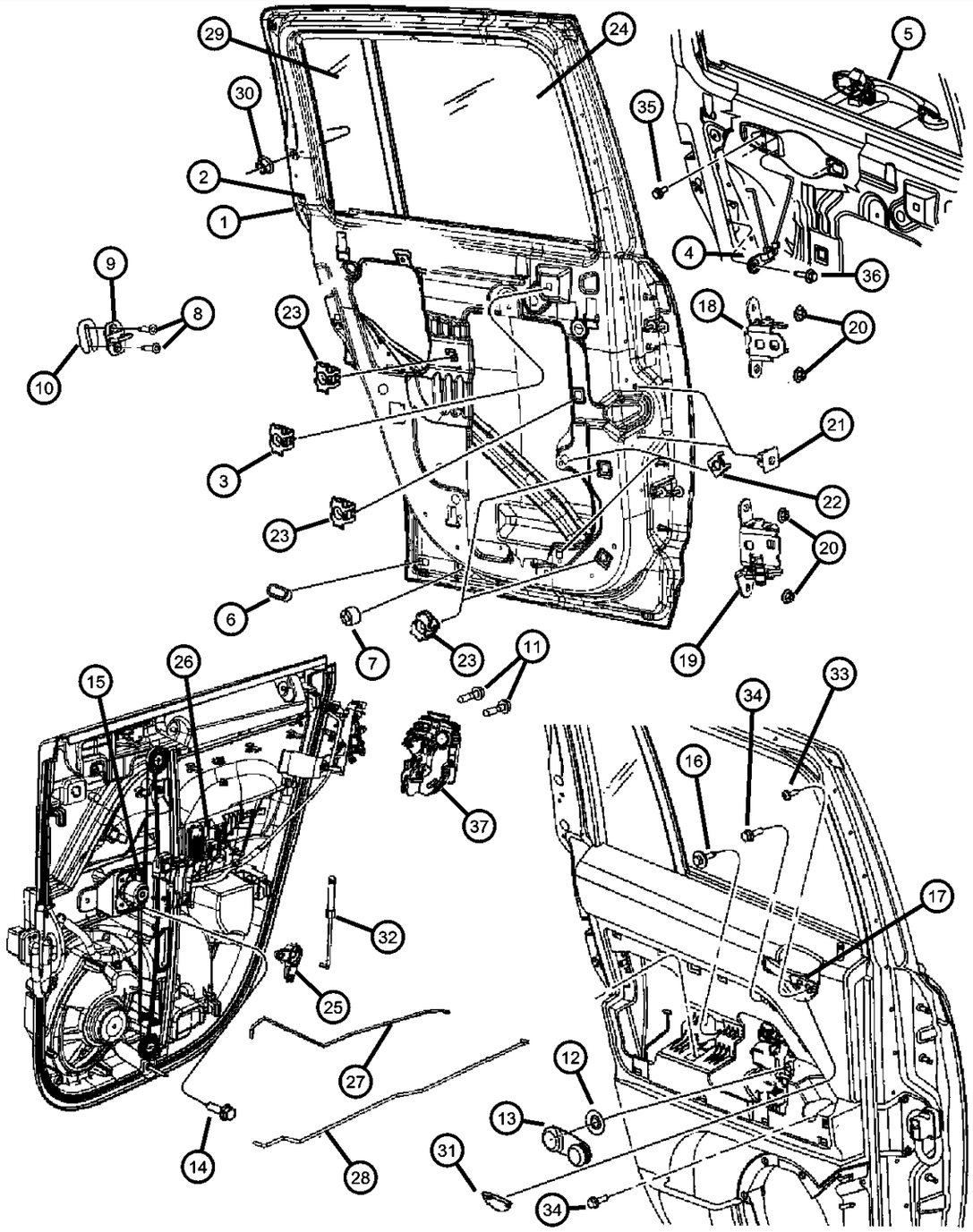

ITEM	PART NUMBER	QTY	LINE	SERIES	BODY	ENGINE	TRANS	TRIM	DESCRIPTION
37									LATCH, Rear Door
	04589412AA	1	J, T		74				Manual Locks [JE8], Right
	04589413AA	1	J, T		74				Manual Locks [JE8], Left
	04589414AA	1	J, T		74				Power Locks [JPD], Right
	04589415AA	1	J, T		74				Power Locks [JPD], Left
	04589418AA	1	U		74				Right Hand Drive, Right
	04589419AA	1	U		74				Right Hand Drive, Left
-38									CLIP, Latch Link, White, Right Latch
	04658676	1	U		74				
		1	J, T		74				
-39	68015005AA	1	U		74				CLIP, Latch Link, Light Green, Right Hand Drive, Right and Left Latch
-40									CLIP, Latch Link, Red, Left Latch
	04658675	1	J, T		74				
		1	U		74				
-41									CLIP, Latch Link, Yellow, Left Latch
	04589017AA	1	J, T		74				
		1	U		74				
-42									CLIP, Latch Link, Red, Right Latch
	04658674	1	J, T		74				
		1	U		74				
-43	04724214	1	J, T		74				CLIP, Latch Link, Tan, Left LatchLeft
-44	04724215	1	J, T		74				CLIP, Latch Link, Brown, Right Latch

COMPASS/PATRIOT (MK)

SERIES	LINE	BODY	ENGINE	TRANSMISSION
H = HIGHLINE L = LOWLINE P = PREMIUM	J = JEEP - 4WD T = JEEP - 2WD	49 = HATCHBACK TYPE #2 74 = SPORT UTILITY 4-DR TYPE #4	ED3 = 2.4L 4 Cyl DOHC 16V Dual VVT Engine	DD7 = 5-Speed Manual T355 Transmission DEF = 6-Speed Manual Aisin BG6 Trans DAV = Continuously Variable Transmission DAW = Cont.Var. w/Off-Rd Crawl Ratio Trans

AR = use ase required - = Non illustrrated part

<< RETURN TO GROUP INDEX

Mirror, Exterior
Figure DMK-510

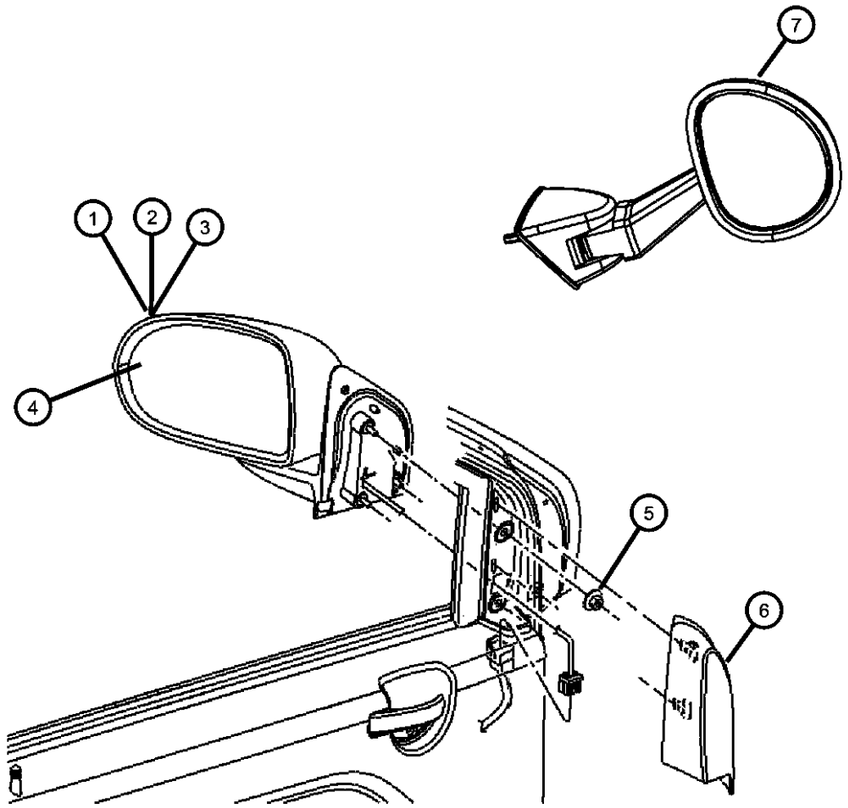

ITEM	PART NUMBER	QTY	LINE	SERIES	BODY	ENGINE	TRANS	TRIM	DESCRIPTION
Sales Code: [ABD]= With Middle East Equipment Group [GTN]= Power Mirror Fold-Away [GTP]= Manual Mirrors, Fold-Away [GTS]= Power Heated Mirrors, Fold-Away [GTU]= Power Folding Heated Mirrors									
1									MIRROR, Outside, Rearview, Electric, Heated
	05115046AA	1							Power Heated [GTS], Right
	05115047AA	1							Power Heated [GTS], Left
2									MIRROR, Outside Rearview
	05115294AC	1	U		49				Power Heated [GUL], Right Hand Drive, Right
	05115795AC	1	U		49				Power Heated [GUL], Right Hand Drive, Left
	05155456AB	1	J, T, U		74				Manual Mirrors [GTP], Right
	05155457AB	1	J, T, U		74				Manual Mirrors [GTP], Left
	05155458AB	1	J, T, U		74				Power Non-Heated [GTN], Right
	05155459AB	1	J, T, U		74				Power Non-Heated [GTN], Left
	05155460AB	1	U		74				Power Heated [GUL], Right Hand Drive, Right
	05155461AB	1	U		74				Power Heated [GUL], Right Hand Drive, Left
	05155462AB	1	J, T, U		74				Power Heated [GTS], Right
	05155463AB	1	J, T, U		74				Power Heated [GTS], Left
	05115040AA	1							Manual Mirrors [GTP], Right
	05115041AA	1							Manual Mirrors [GTP], Left
3									MIRROR, Outside Rearview Electric Foldaway
	05115042AA	1							Power Mirror [GTN], Right
	05115043AA	1							Power Mirror [GTN], Left
4									GLASS, Mirror Replacement
	05116406AA	1	J, T, U		74				Power Heated [GTS] & Middle East Equipment Group [ABD], Right
	05116407AA	1	J, T, U		74				Power Heated [GTS] & Middle East Equipment Group [ABD], Left

COMPASS/PATRIOT (MK)

SERIES	LINE	BODY	ENGINE	TRANSMISSION
H = HIGHLINE L = LOWLINE P = PREMIUM	J = JEEP - 4WD T = JEEP - 2WD	49 = HATCHBACK TYPE #2 74 = SPORT UTILITY 4-DR TYPE #4	ED3 = 2.4L 4 Cyl DOHC 16V Dual VVT Engine	DD7 = 5-Speed Manual T355 Transmission DEF = 6-Speed Manual Aisin BG6 Trans DAV = Continuously Variable Transmission DAW = Cont.Var. w/Off-Rd Crawl Ratio Trans

Mirror, Exterior
Figure DMK-510

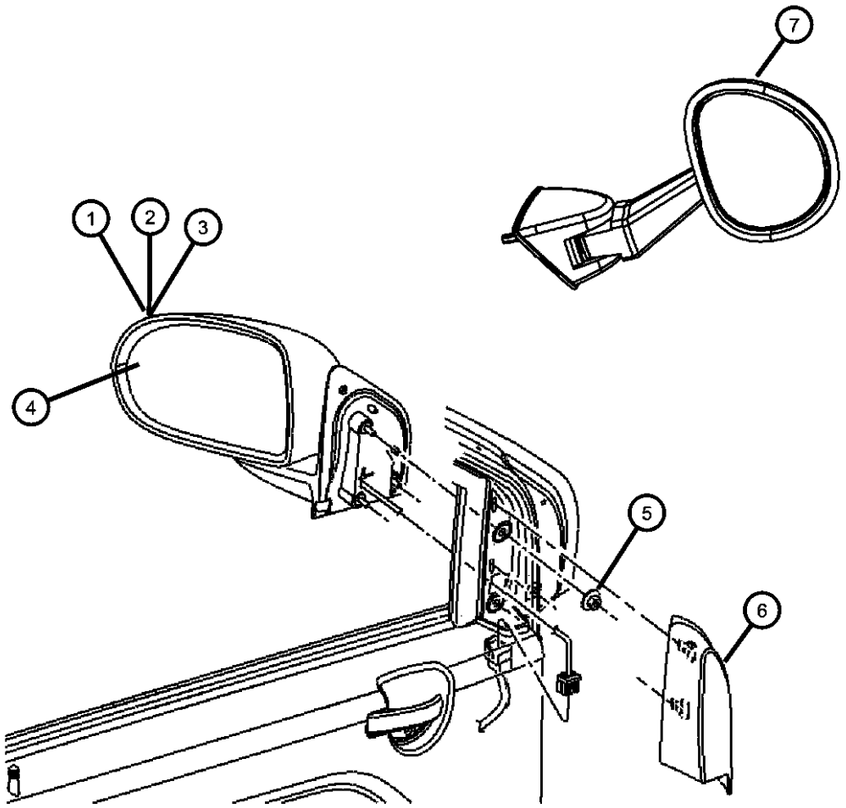

ITEM	PART NUMBER	QTY	LINE	SERIES	BODY	ENGINE	TRANS	TRIM	DESCRIPTION
	05160044AB	1	J, T, U		49				Power Heated [GTS] & Middle East Equipment Group [ABD], Right
	05160045AA	1	J		49				Power Heated [GTS] & Middle East Equipment Group [ABD], Left
	68000018AA	1	J, T, U		49				Power Non-Heated [GTN], Right
		1	J, T, U		49				Manual Mirrors [GTP], Right
	68000019AA	1	J, T, U		49				Manual Mirrors [GTP], Left
	68000023AA	1	J, T, U		49				Power Heated [GTS], Left
	68000024AA	1	J, T, U		49				Power Heated [GTS], Right
	68003712AA	1	U		49				Power Heated [GUL], Right Hand Drive, Right
	68003713AA	1	U		49				Power Heated [GUL], Right Hand Drive, Left
	68003714AA	1	J, T, U		74				Manual Mirror [GTP], Right
	68003715AA	1	J, T, U		74				Manual Mirror [GTP], Left
		1	J, T, U		49				Power Non-Heated [GTN], Left
	68003717AA	1	J, T, U		74				Power Non-Heated [GTN], Left
	68003718AA	1	U		74				Power Heated [GUL], Right Hand Drive, Right
	68003719AA	1	U		74				Power Heated [GUL], Right Hand Drive, Left
	68003720AA	1	J, T, U		74				Power Heated [GTS], Right
	68003721AA	1	J, T, U		74				Power Heated [GTS], Left
	68003716AA	1	J, T, U		74				Power Non-Heated [GTN], Right
5	06102398AA	6							NUT, Hex
6									BEZEL, Power Mirror
	0ZX79DX9AC	1	J, T, U		49				Left
	1CB00DK7AA	1	J, T, U		74				[KA], Right
	1CB00XDVAA	1	J, T, U		74				[DA], Right
	1CB01DK7AA	1	J, T, U		74				[KA], Left
	1CB01XDVAA	1	J, T, U		74				[DA], Left
	0ZX78DX9AA	1			49				Right
7									MIRROR, AUXILIARY FENDER MOUNTED

COMPASS/PATRIOT (MK)

SERIES	LINE	BODY	ENGINE	TRANSMISSION
H = HIGHLINE L = LOWLINE P = PREMIUM	J = JEEP - 4WD T = JEEP - 2WD	49 = HATCHBACK TYPE #2 74 = SPORT UTILITY 4-DR TYPE #4	ED3 = 2.4L 4 Cyl DOHC 16V Dual VVT Engine	DD7 = 5-Speed Manual T355 Transmission DEF = 6-Speed Manual Aisin BG6 Trans DAV = Continuously Variable Transmission DAW = Cont.Var. w/Off-Rd Crawl Ratio Trans

Mirror, Exterior
Figure DMK-510

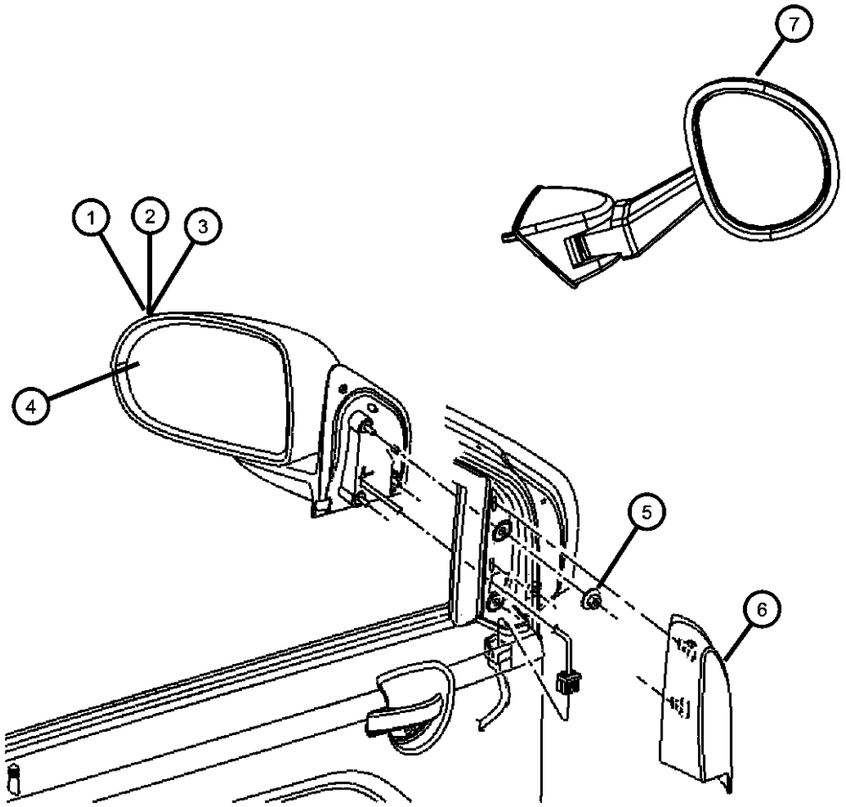

ITEM	PART NUMBER	QTY	LINE	SERIES	BODY	ENGINE	TRANS	TRIM	DESCRIPTION
	05116435AA	1	U		74				
	05160309AA	1	U		49				

COMPASS/PATRIOT (MK)

SERIES	LINE	BODY	ENGINE	TRANSMISSION
H = HIGHLINE L = LOWLINE P = PREMIUM	J = JEEP - 4WD T = JEEP - 2WD	49 = HATCHBACK TYPE #2 74 = SPORT UTILITY 4-DR TYPE #4	ED3 = 2.4L 4 Cyl DOHC 16V Dual VVT Engine	DD7 = 5-Speed Manual T355 Transmission DEF = 6-Speed Manual Aisin BG6 Trans DAV = Continuously Variable Transmission DAW = Cont.Var. w/Off-Rd Crawl Ratio Trans

Front Door - 49
Figure DMK-610

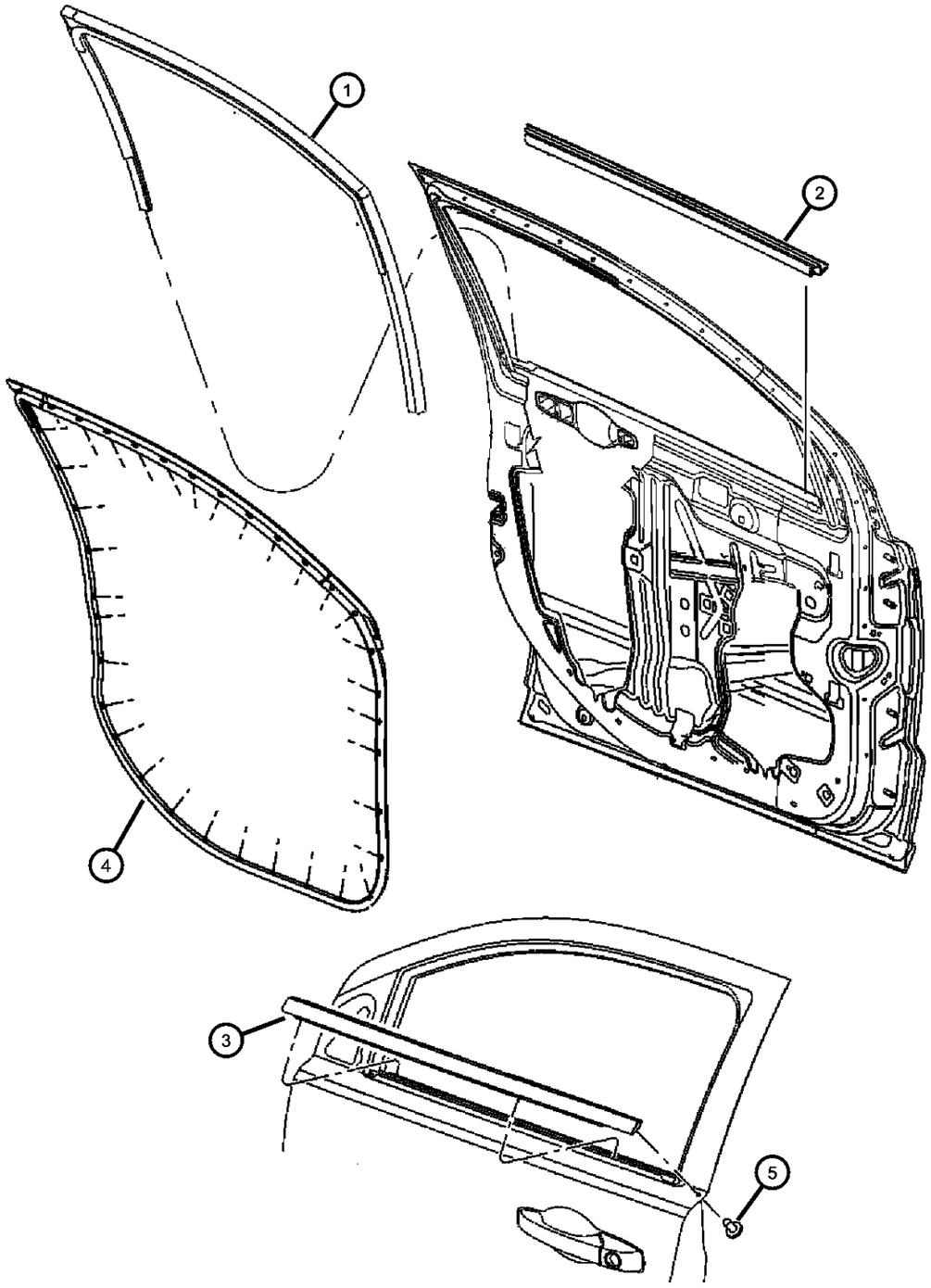

ITEM	PART NUMBER	QTY	LINE	SERIES	BODY	ENGINE	TRANS	TRIM	DESCRIPTION
1									WEATHERSTRIP, Front Door Glass Run
	05074656AC	1	J, T, U		49				Right
	05074657AC	1	J, T, U		49				Left
2									WEATHERSTRIP, Front Door Belt, Inner
	05074654AC	1	J, T, U		49				Right
	05074655AC	1	J, T, U		49				Left
3									WEATHERSTRIP, Front Door Belt, Outer
	05074714AC	1	J, T, U		49				Right
	05074715AC	1	J, T, U		49				Left
4									WEATHERSTRIP, Front Door Mounted
	05074644AC	1	J, T, U		49				Right
	05074645AC	1	J, T, U		49				Left
5	06508584AA	2							SCREW

COMPASS/PATRIOT (MK)

SERIES	LINE	BODY	ENGINE	TRANSMISSION
H = HIGHLINE L = LOWLINE P = PREMIUM	J = JEEP - 4WD T = JEEP - 2WD	49 = HATCHBACK TYPE #2 74 = SPORT UTILITY 4-DR TYPE #4	ED3 = 2.4L 4 Cyl DOHC 16V Dual VVT Engine	DD7 = 5-Speed Manual T355 Transmission DEF = 6-Speed Manual Aisin BG6 Trans DAV = Continuously Variable Transmission DAW = Cont.Var. w/Off-Rd Crawl Ratio Trans

Front Door - 74
Figure DMK-620

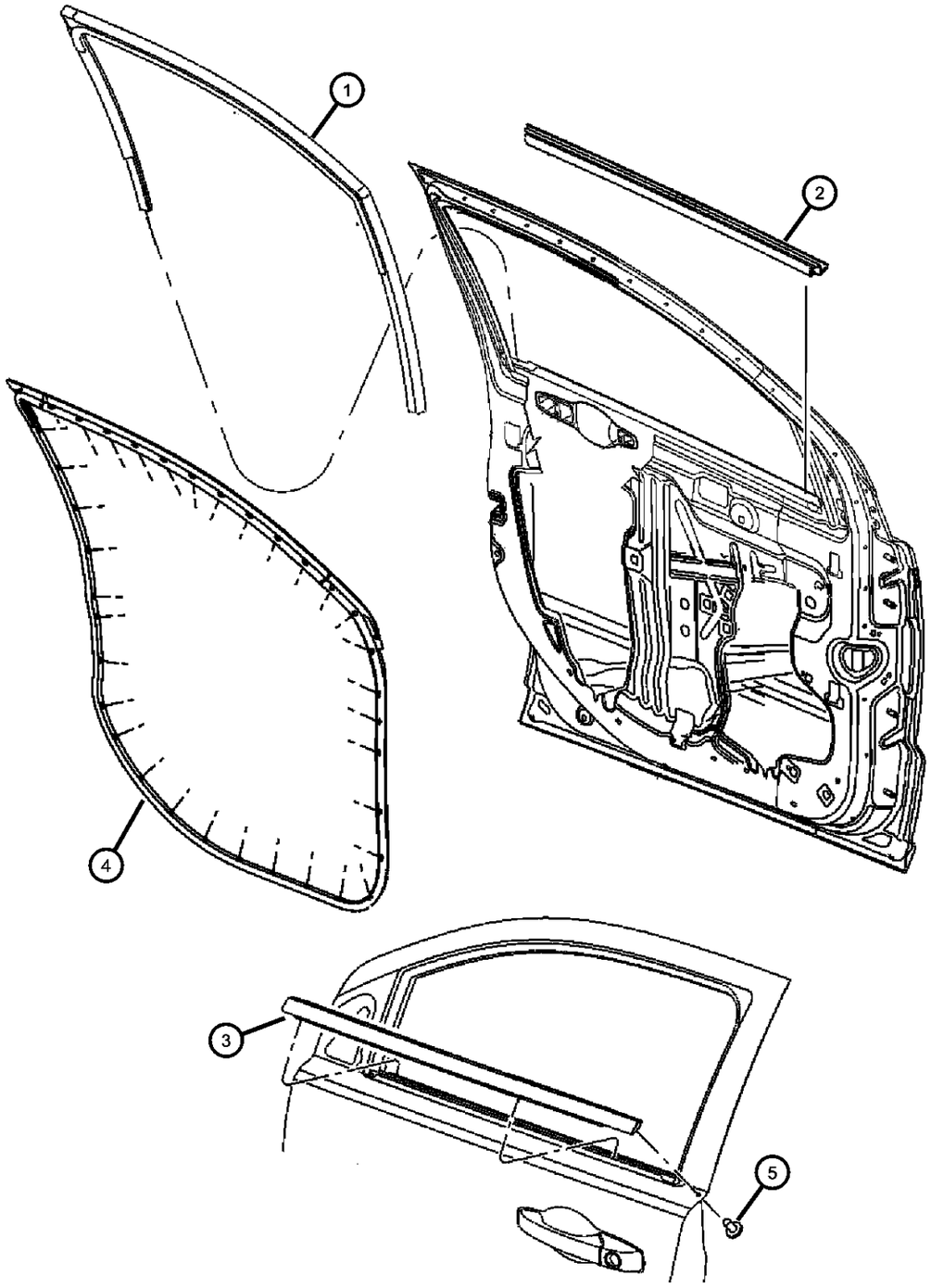

ITEM	PART NUMBER	QTY	LINE	SERIES	BODY	ENGINE	TRANS	TRIM	DESCRIPTION
1									WEATHERSTRIP, Front Door Glass Run
	05067768AA	1	J, T, U		74				Right
	05067769AA	1	J, T, U		74				Left
2									WEATHERSTRIP, Front Door Belt Inner
	05067762AA	1	J, T, U		74				Right
	05067763AA	1	J, T, U		74				Left
3									WEATHERSTRIP, Front Door Belt Outer
	05067754AA	1	J, T, U		74				Right
	05067755AA	1	J, T, U		74				Left
4									WEATHERSTRIP, Front Door Mounted
	05067766AB	1	J, T, U		74				Right
	05067767AB	1	J, T, U		74				Left
5	06508584AA	2							SCREW

COMPASS/PATRIOT (MK)

SERIES	LINE	BODY	ENGINE	TRANSMISSION
H = HIGHLINE L = LOWLINE P = PREMIUM	J = JEEP - 4WD T = JEEP - 2WD	49 = HATCHBACK TYPE #2 74 = SPORT UTILITY 4-DR TYPE #4	ED3 = 2.4L 4 Cyl DOHC 16V Dual VVT Engine	DD7 = 5-Speed Manual T355 Transmission DEF = 6-Speed Manual Aisin BG6 Trans DAV = Continuously Variable Transmission DAW = Cont.Var. w/Off-Rd Crawl Ratio Trans

AR = use ase required - = Non illustrrated part

Rear Door - 49
Figure DMK-630

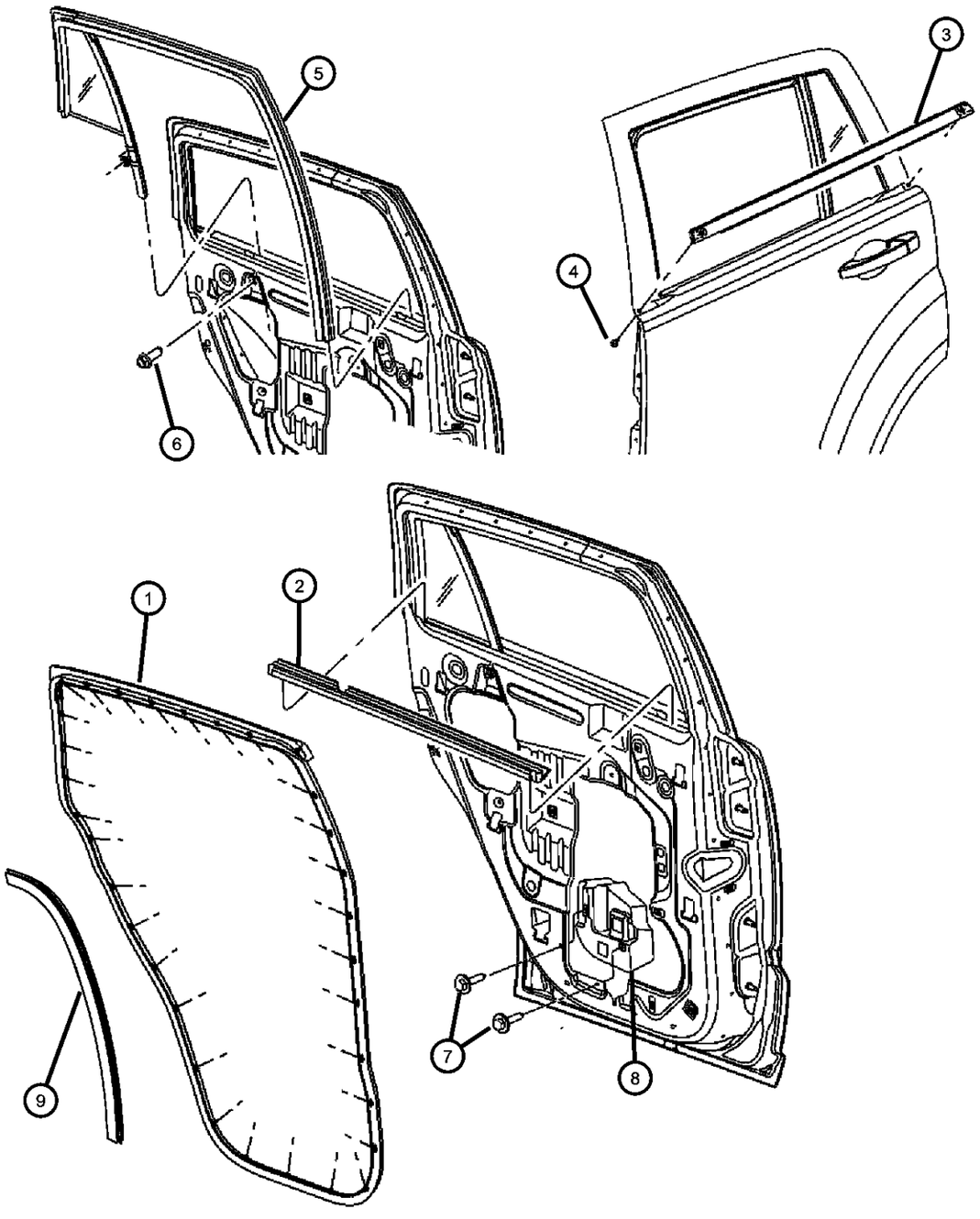

ITEM	PART NUMBER	QTY	LINE	SERIES	BODY	ENGINE	TRANS	TRIM	DESCRIPTION
1									WEATHERSTRIP, Rear Door Mounted
	05074648AC	1	J, T, U		49				Right
	05074649AC	1	J, T, U		49				Left
2									WEATHERSTRIP, Rear Door Belt Inner
	05074658AC	1	J, T, U		49				Right
	05074659AC	1	J, T, U		49				Left
3									WEATHERSTRIP, Rear Door Belt Outer
	05074652AC	1	J, T, U		49				Right
	05074653AC	1	J, T, U		49				Left
4	06508584AA	4							SCREW
5									WEATHERSTRIP, Rear Door Glass Run
	05074660AC	1	J, T, U		49				Solar Tint, Right
	DV11185GTY								Collision Replacement Glass
	05074661AC	1	J, T, U		49				Solar Tint, Left
	DV11186GTY								Collision Replacement Glass
	05160064AC	1	J, T, U		49				Sunscreen, Right
	DV11185YPY								Collision Replacement Glass
	05160065AC	1	J, T, U		49				Sunscreen, Left
	DV11186YPY								Collision Replacement Glass
6	06104336AA	2							SCREW
7	06104172AA	4							SCREW
8									FOAM BLOCK, Rear Door
	05115692AB	1	J, T, U		49, 74				Right
	05115693AB	1	J, T, U		49, 74				Left
9	05074650AC	2	J, T, U		49				WEATHERSTRIP, Rear Wheelhouse

COMPASS/PATRIOT (MK)

SERIES	LINE	BODY	ENGINE	TRANSMISSION
H = HIGHLINE L = LOWLINE P = PREMIUM	J = JEEP - 4WD T = JEEP - 2WD	49 = HATCHBACK TYPE #2 74 = SPORT UTILITY 4-DR TYPE #4	ED3 = 2.4L 4 Cyl DOHC 16V Dual VVT Engine	DD7 = 5-Speed Manual T355 Transmission DEF = 6-Speed Manual Aisin BG6 Trans DAV = Continuously Variable Transmission DAW = Cont.Var. w/Off-Rd Crawl Ratio Trans

AR = use ase required - = Non illustrrated part

Rear Door - 74
Figure DMK-640

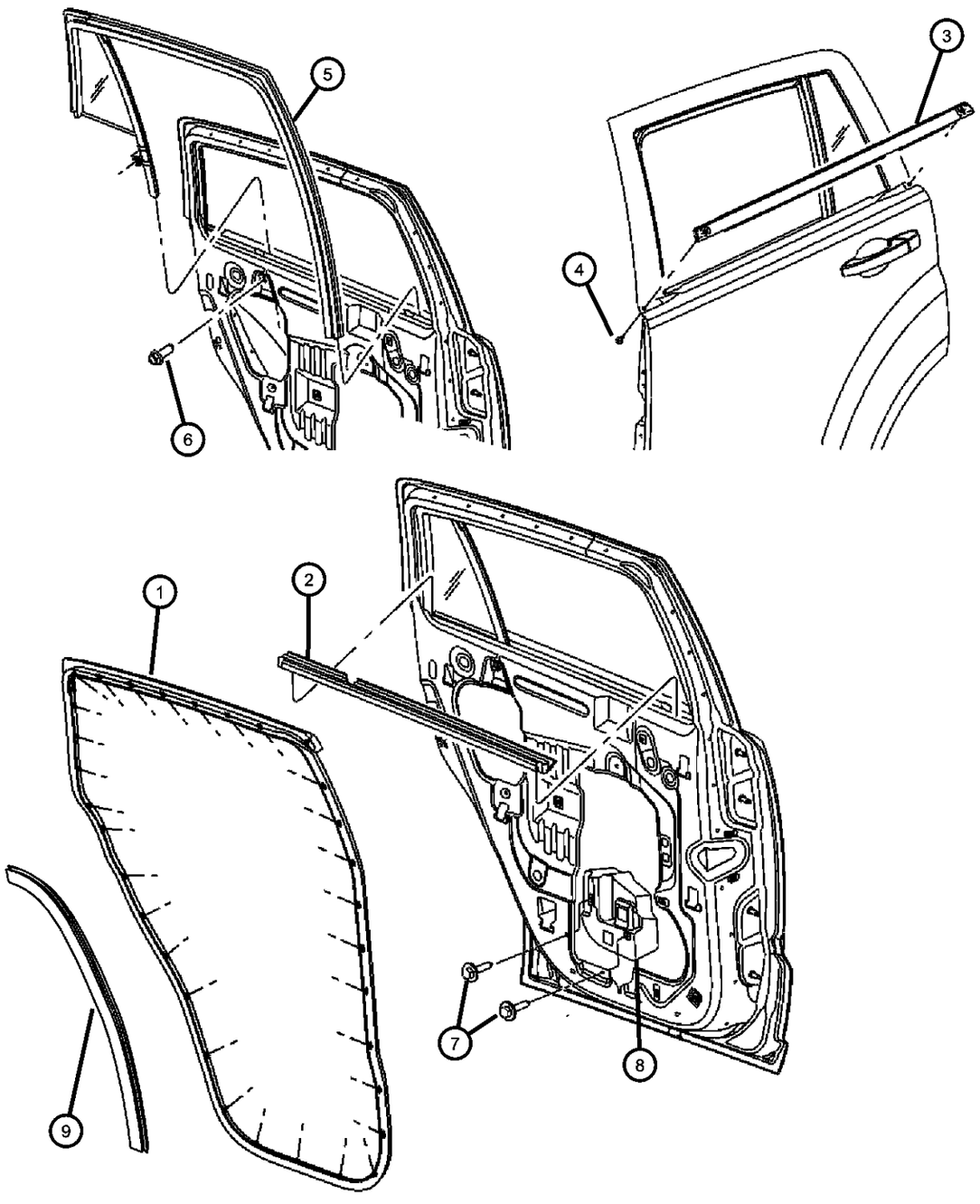

ITEM	PART NUMBER	QTY	LINE	SERIES	BODY	ENGINE	TRANS	TRIM	DESCRIPTION
1									WEATHERSTRIP, Rear Door Mounted
	05067764AB	1	J, T, U		74				Right
	05067765AB	1	J, T, U		74				Left
2									WEATHERSTRIP, Rear Door Belt Inner
	05067750AA	1	J, T, U		74				Right
	05067751AA	1	J, T, U		74				Left
3									WEATHERSTRIP, Rear Door Belt Outer
	05067752AA	1	J, T, U		74				Right
	05067753AA	1	J, T, U		74				Left
4	06508584AA	4							SCREW
5									WEATHERSTRIP, Rear Door Glass Run
	05067770AA	1	J, T, U		74				With Solar Tint Glass [GAM], Right
	05067771AA	1	J, T, U		74				With Solar Tint Glass [GAM], Left
	05067772AA	1	J, T, U		74				With Sunscreen Glass [GEG], Right
	05067773AA	1	J, T, U		74				With Sunscreen Glass [GEG], Left
6	06104336AA	2							SCREW
7	06104172AA	4							SCREW
8									FOAM BLOCK, Rear Door
	05115692AB	1	J, T, U		49, 74				Right
	05115693AB	1	J, T, U		49, 74				Left
9	05067758AB	2	J, T, U		74				WEATHERSTRIP, Rear Wheelhouse

COMPASS/PATRIOT (MK)

SERIES	LINE	BODY	ENGINE	TRANSMISSION
H = HIGHLINE L = LOWLINE P = PREMIUM	J = JEEP - 4WD T = JEEP - 2WD	49 = HATCHBACK TYPE #2 74 = SPORT UTILITY 4-DR TYPE #4	ED3 = 2.4L 4 Cyl DOHC 16V Dual VVT Engine	DD7 = 5-Speed Manual T355 Transmission DEF = 6-Speed Manual Aisin BG6 Trans DAV = Continuously Variable Transmission DAW = Cont.Var. w/Off-Rd Crawl Ratio Trans

Liftgate and Hood
Figure DMK-650

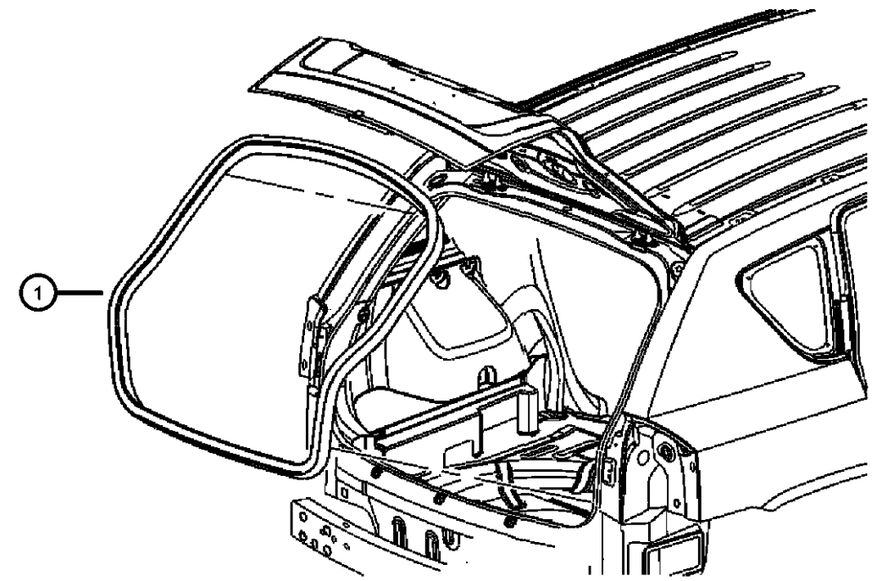

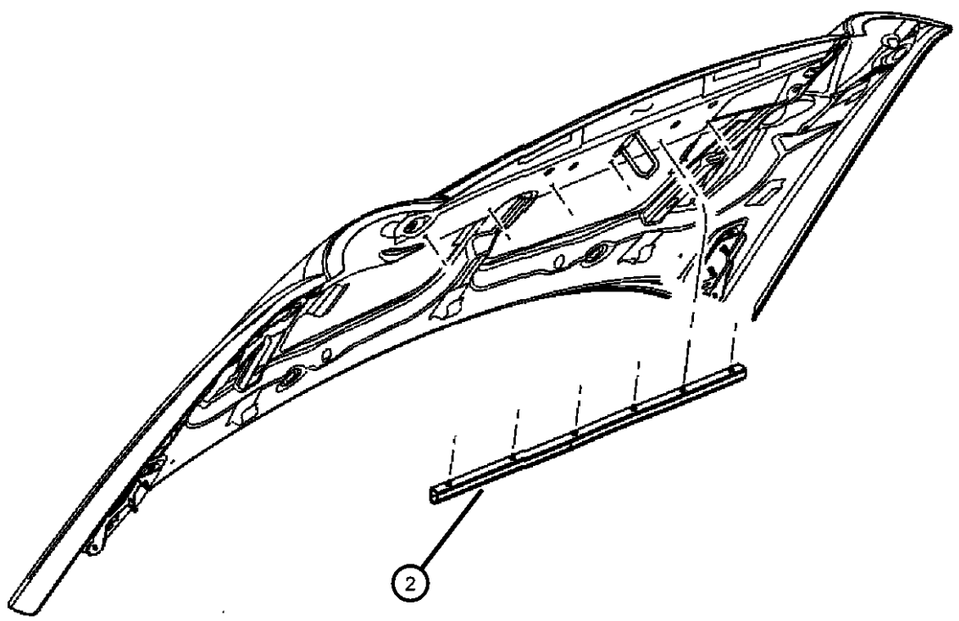

ITEM	PART NUMBER	QTY	LINE	SERIES	BODY	ENGINE	TRANS	TRIM	DESCRIPTION
1	05074641AC	1	J, T, U		49				WEATHERSTRIP, Liftgate Opening
2	05115671AA	1	J, T, U		49				WEATHERSTRIP, Hood to Radiator

COMPASS/PATRIOT (MK)

SERIES	LINE	BODY	ENGINE	TRANSMISSION
H = HIGHLINE L = LOWLINE P = PREMIUM	J = JEEP - 4WD T = JEEP - 2WD	49 = HATCHBACK TYPE #2 74 = SPORT UTILITY 4-DR TYPE #4	ED3 = 2.4L 4 Cyl DOHC 16V Dual VVT Engine	DD7 = 5-Speed Manual T355 Transmission DEF = 6-Speed Manual Aisin BG6 Trans DAV = Continuously Variable Transmission DAW = Cont.Var. w/Off-Rd Crawl Ratio Trans

AR = use ase required - = Non illustrrated part

Group - EMK

Exterior Ornamentation

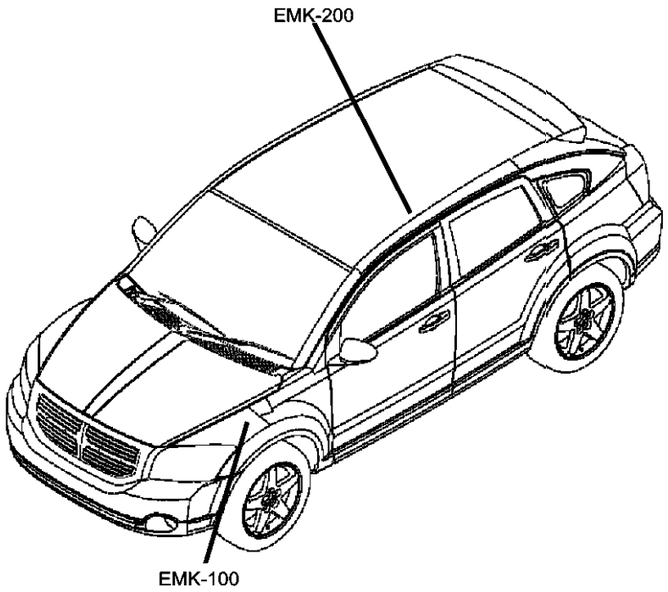

EMK-100 Nameplates 	**EMK-200** Moldings and Ornamentation 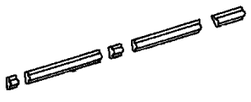		

Group - EMK Exterior Ornamentation

Illustration Title — Group-Fig. No.

Nameplates
Nameplates-Decals ..... Fig. EMK - 110

Moldings and Ornamentation
Moldings - 49 ..... Fig. EMK - 210
Moldings - 74 ..... Fig. EMK - 220

Nameplates-Decals
Figure EMK-110

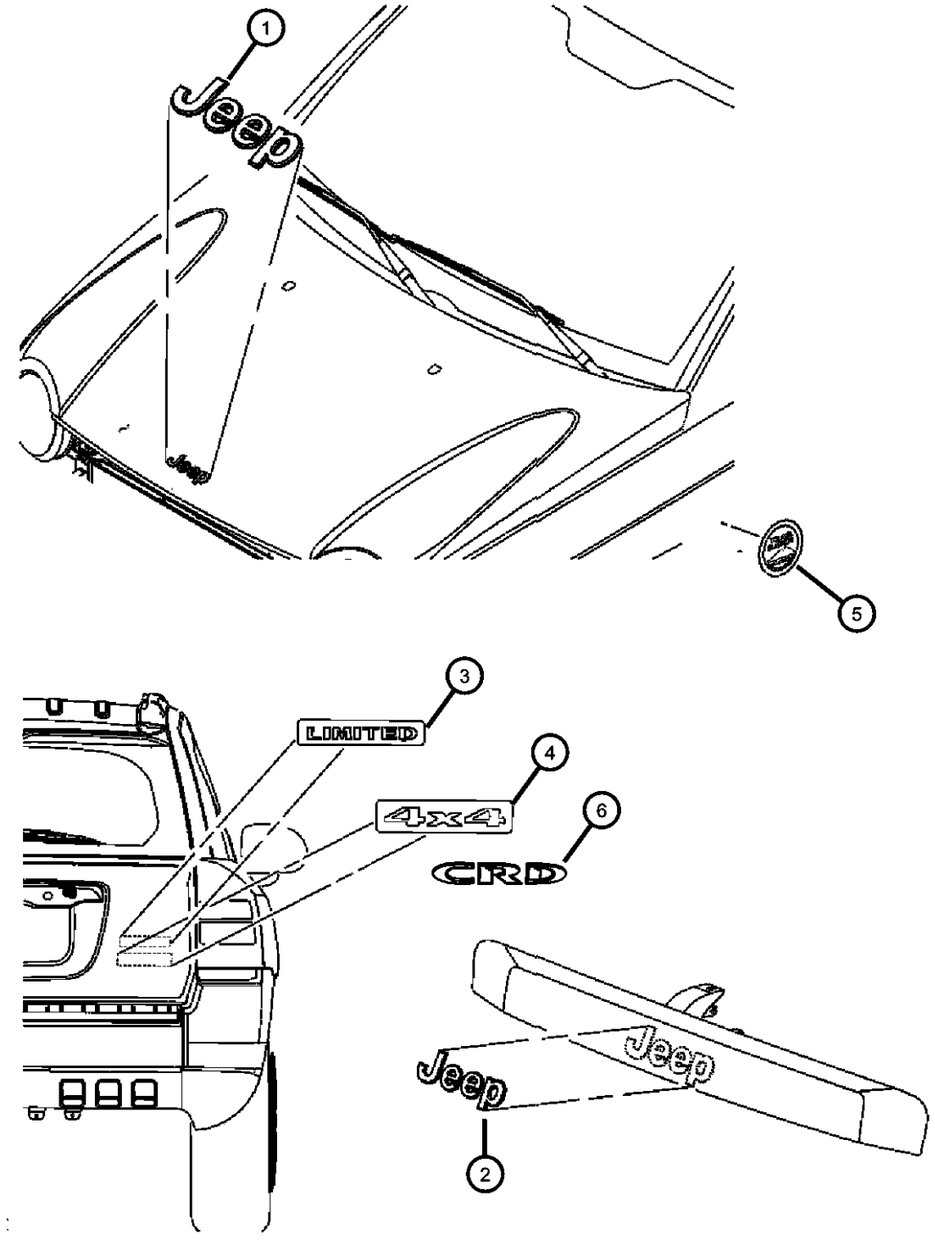

ITEM	PART NUMBER	QTY	LINE	SERIES	BODY	ENGINE	TRANS	TRIM	DESCRIPTION
1	05116491AA	1	J, T, U		49, 74				NAMEPLATE, Jeep, Hood
2	55157088AB	1							NAMEPLATE, Jeep, Lightbar
3	55157090AB	1							NAMEPLATE, Liftgate, LIMITED
4	55157091AB	1							NAMEPLATE, Liftgate, 4x4
5	55157317AB	1	J, T, U		49, 74				MEDALLION
6	55157095AC	1	J, T, U		49, 74				NAMEPLATE

COMPASS/PATRIOT (MK)

SERIES	LINE	BODY	ENGINE	TRANSMISSION
H = HIGHLINE L = LOWLINE P = PREMIUM	J = JEEP - 4WD T = JEEP - 2WD	49 = HATCHBACK TYPE #2 74 = SPORT UTILITY 4-DR TYPE #4	ED3 = 2.4L 4 Cyl DOHC 16V Dual VVT Engine	DD7 = 5-Speed Manual T355 Transmission DEF = 6-Speed Manual Aisin BG6 Trans DAV = Continuously Variable Transmission DAW = Cont.Var. w/Off-Rd Crawl Ratio Trans

Figure EMK-210

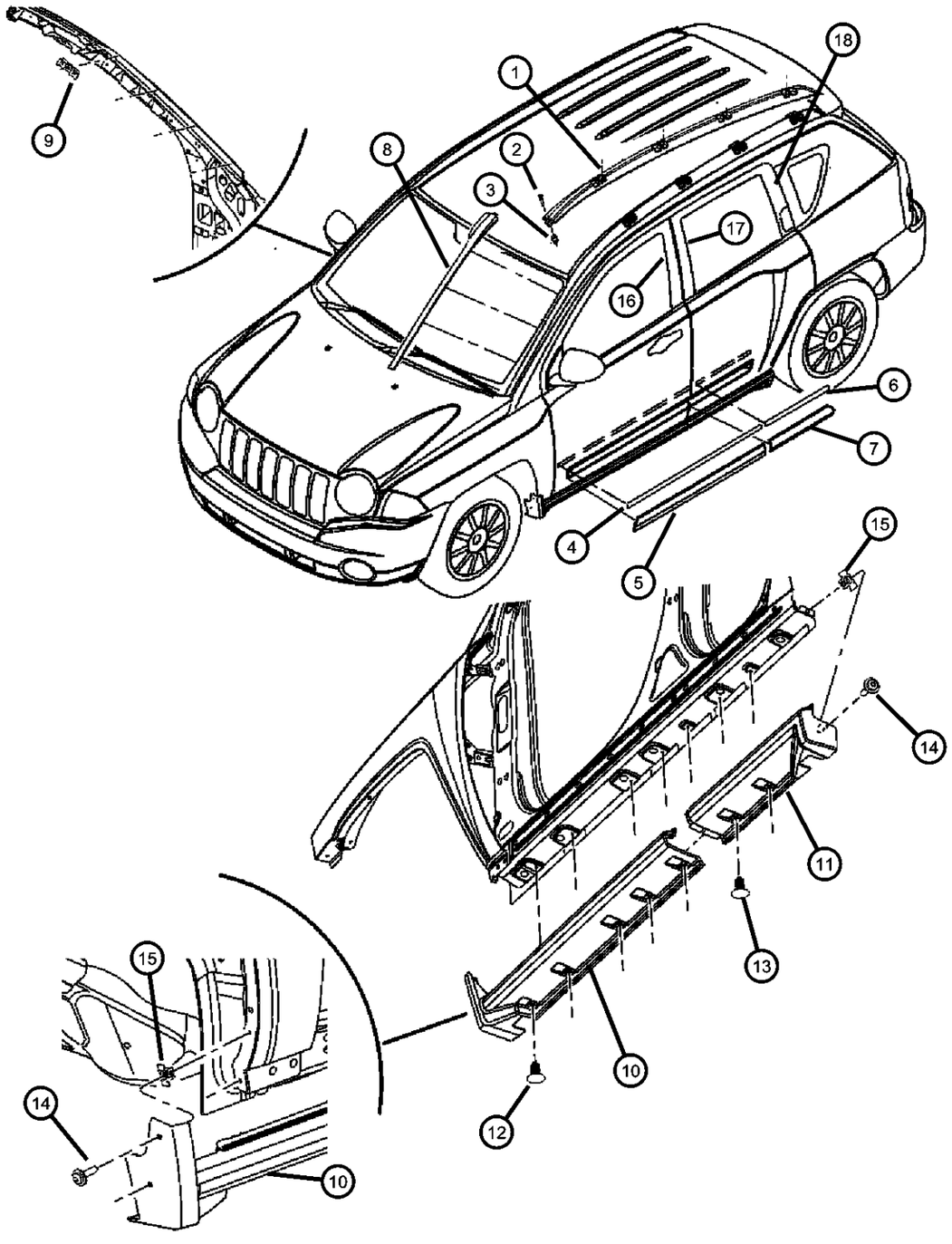

ITEM	PART NUMBER	QTY	LINE	SERIES	BODY	ENGINE	TRANS	TRIM	DESCRIPTION
1									SIDE RAIL, Roof Rack
	05303806AA	1	J, T, U		49				Right
	05303807AA	1	J, T, U		49				Left
2	06508452AA	5	J, T, U		49				SCREW, Pan Head
3	06506739AA	5							NUT, Rivet
4									MOLDING, Front Door
	0YW92AJ-CAA	2							[K3J]
	0YW92ARHAA	2							[K3R]
	0YW92CB6AA	2							[K3B]
	0YW92DB-MAA	2							[K3D]
	0YW92DX8AA	2							[K3X]
	0YW92EG-JAA	2							[K3G]
	0YW92SW1AA	2							[K3W]
	0YW92WS2AA	2							[K3S]
5									MOLDING, Front Door
	1CH94WS2AA	1							Right
	1CH95WS2AA	1							Left
6									MOLDING, Rear Door
	0YZ51AJCAA	2							[K3J]
	0YZ51ARHAA	2							[K3R]
	0YZ51CB6AA	2							[K3B]
	0YZ51DB-MAA	2							[K3D]
	0YZ51DX8AA	2							[K3X]
	0YZ51EGJAA	2							[K3G]
	0YZ51SW1AA	2							[K3W]
	0YZ51WS2AA	2							[K3S]
7									MOLDING, Rear Door
	1CH92WS2AA	1							Right
	1CH93WS2AA	1							Left
8									MOLDING, A-PILLAR
	0YS48RXFAA	1							Right

COMPASS/PATRIOT (MK)

SERIES	LINE	BODY	ENGINE	TRANSMISSION
H = HIGHLINE L = LOWLINE P = PREMIUM	J = JEEP - 4WD T = JEEP - 2WD	49 = HATCHBACK TYPE #2 74 = SPORT UTILITY 4-DR TYPE #4	ED3 = 2.4L 4 Cyl DOHC 16V Dual VVT Engine	DD7 = 5-Speed Manual T355 Transmission DEF = 6-Speed Manual Aisin BG6 Trans DAV = Continuously Variable Transmission DAW = Cont.Var. w/Off-Rd Crawl Ratio Trans

AR = use ase required - = Non illustrrated part

<< RETURN TO GROUP INDEX

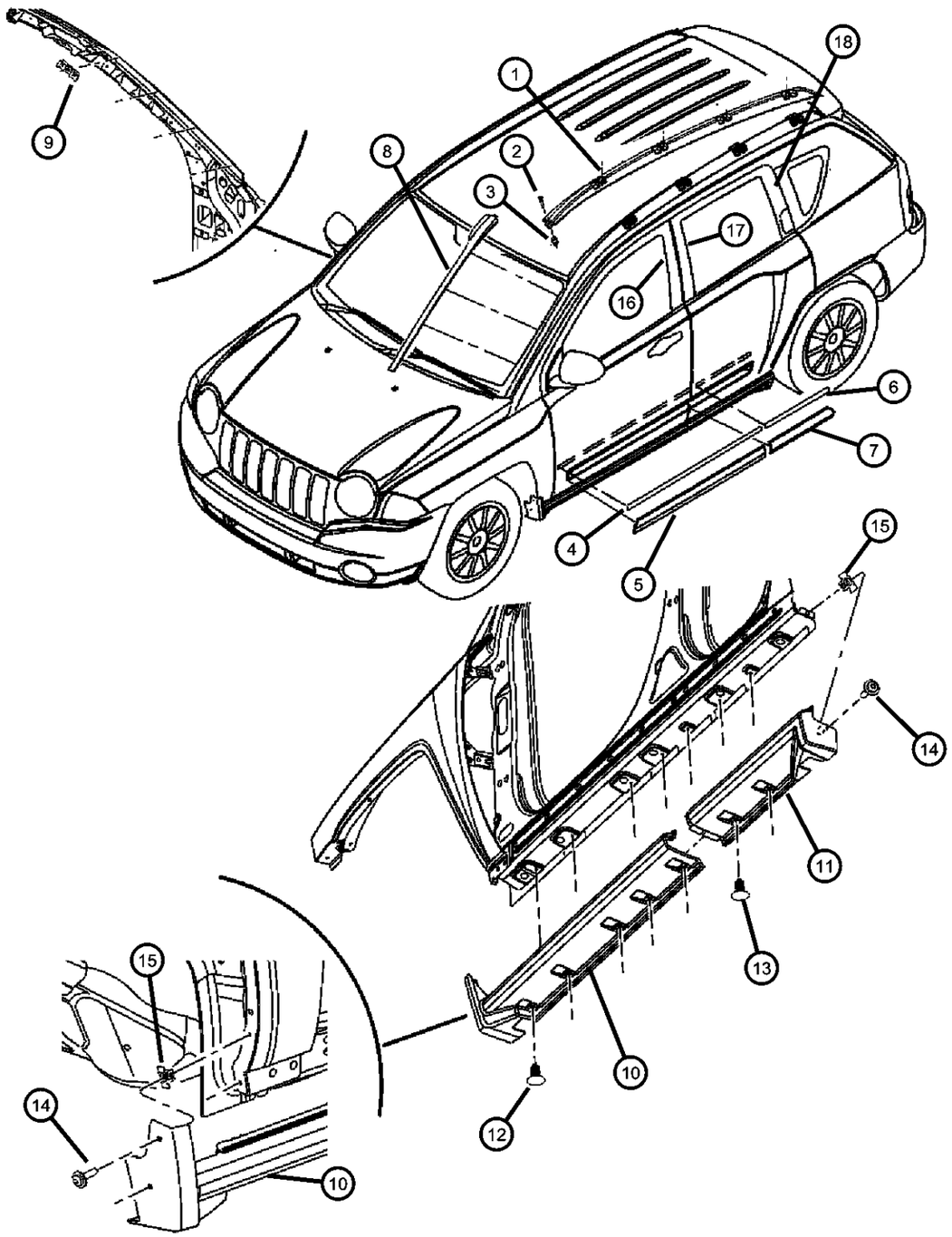

ITEM	PART NUMBER	QTY	LINE	SERIES	BODY	ENGINE	TRANS	TRIM	DESCRIPTION
	0YS49RXFAA	1							Left
9	04806225AA	8							CLIP
10									MOLDING, Side Sill, Front
	05116126AA	1							Right
	05116127AA	1							Left
11									MOLDING, Side Sill, Rear
	05116128AA	1							Right
	05116129AA	1							Left
12	06502481	5							FASTENER
13	06502481	2							FASTENER
14	06104610AA	1							SCREW
15	06508251AA	2							NUT
16									TAPE, Front Door
	05116388AA	1							Right
	05116389AA	1							Left
17									TAPE, Black Out, B Pillar
	05116386AA	1							Right
	05116387AA	1							Left
18									TAPE, C Pillar
	05116390AA	1							Right
	05116391AA	1							Left

COMPASS/PATRIOT (MK)

SERIES	LINE	BODY	ENGINE	TRANSMISSION
H = HIGHLINE L = LOWLINE P = PREMIUM	J = JEEP - 4WD T = JEEP - 2WD	49 = HATCHBACK TYPE #2 74 = SPORT UTILITY 4-DR TYPE #4	ED3 = 2.4L 4 Cyl DOHC 16V Dual VVT Engine	DD7 = 5-Speed Manual T355 Transmission DEF = 6-Speed Manual Aisin BG6 Trans DAV = Continuously Variable Transmission DAW = Cont.Var. w/Off-Rd Crawl Ratio Trans

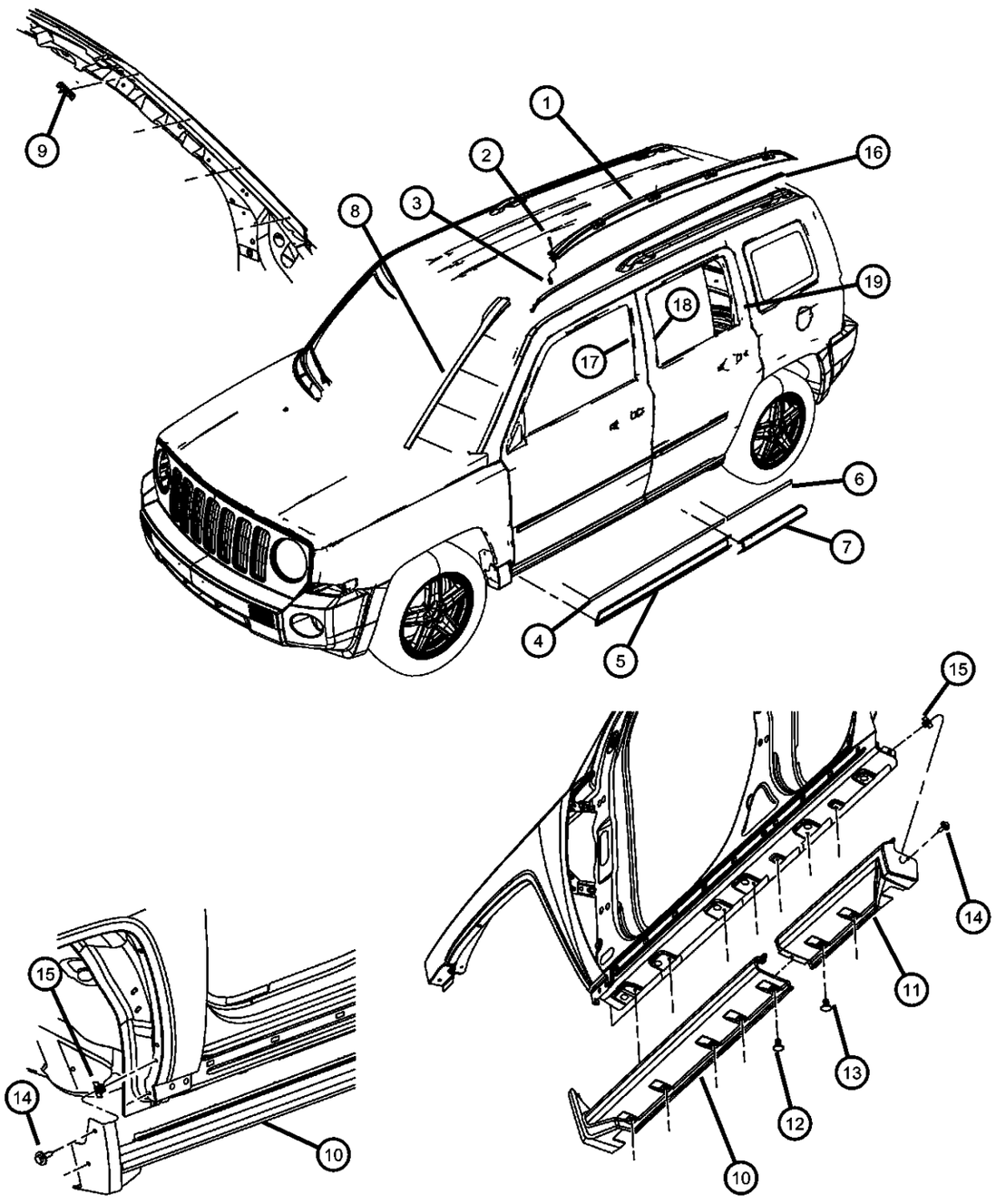

ITEM	PART NUMBER	QTY	LINE	SERIES	BODY	ENGINE	TRANS	TRIM	DESCRIPTION
1									SIDE RAIL, Roof Rack
	05116252AA	1	J, T, U		74				Black [MWE], Right
	05116253AA	1	J, T, U		74				Black [MWE], Left
	05116370AA	1	J, T, U		74				Silver [MW1], Right
	05116371AA	1	J, T, U		74				Silver [MW1], Left
2	06508452AA	4	J, T, U		74				SCREW, Pan Head
3	06506739AA	4			74				NUT, Rivet
4									MOLDING, Front Door
	1BB35AJCAB	2	J, T, U		74				[K3J]
	1BB35ARHAB	2	J, T, U		74				[K3R]
	1BB35DBMAB	2	J, T, U		74				[K3D]
	1BB35DX8AB	2	J, T, U		74				[K3X]
	1BB35EGJAB	2	J, T, U		74				[K3G]
	1BB35SW1AB	2	J, T, U		74				[K3W]
	1BB35WS2AB	2	J, T, U		74				[K3S]
	1CW01RX-FAA	2	J, T, U		74				[K4X]
	1BB35CB6AB	2	J, T, U		74				[K3B]
5									MOLDING, Front Door
	1CH94WS2AA	1							Right
	1CH95WS2AA	1							Left
6									MOLDING, Rear Door
	1BB36AJCAB	1	J, T, U		74				[K3J], Right
	1BB36ARHAB	1	J, T, U		74				[K3R], Right
	1BB36DBMAB	1	J, T, U		74				[K3D], Right
	1BB36DX8AB	1	J, T, U		74				[K3X], Right
	1BB36EGJAB	1	J, T, U		74				[K3G], Right
	1BB36SW1AB	1	J, T, U		74				[K3W], Right
	1BB36WS2AB	1	J, T, U		74				[K3S], Right
	1BB37AJCAB	1	J, T, U		74				[K3J], Left
	1BB37ARHAB	1	J, T, U		74				[K3R], Left
	1BB37CB6AB	1	J, T, U		74				[K3B], Left
	1BB37DBMAB	1	J, T, U		74				[K3D], Left

COMPASS/PATRIOT (MK)

SERIES	LINE	BODY	ENGINE	TRANSMISSION
H = HIGHLINE L = LOWLINE P = PREMIUM	J = JEEP - 4WD T = JEEP - 2WD	49 = HATCHBACK TYPE #2 74 = SPORT UTILITY 4-DR TYPE #4	ED3 = 2.4L 4 Cyl DOHC 16V Dual VVT Engine	DD7 = 5-Speed Manual T355 Transmission DEF = 6-Speed Manual Aisin BG6 Trans DAV = Continuously Variable Transmission DAW = Cont.Var. w/Off-Rd Crawl Ratio Trans

Moldings - 74
Figure EMK-220

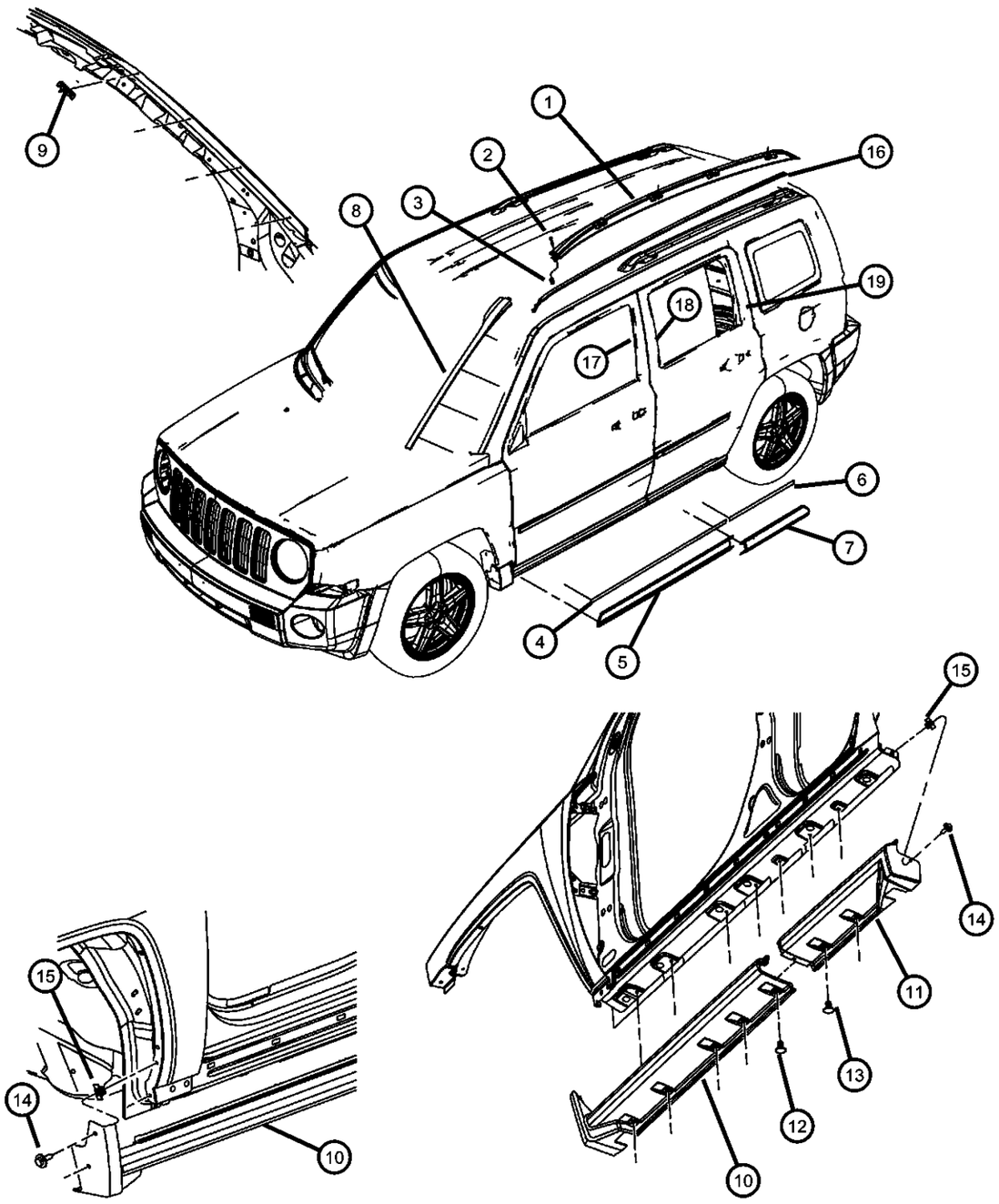

ITEM	PART NUMBER	QTY	LINE	SERIES	BODY	ENGINE	TRANS	TRIM	DESCRIPTION
	1BB37DX8AB	1	J, T, U		74				[K3X], Left
	1BB37EGJAB	1	J, T, U		74				[K3G], Left
	1BB37SW1AB	1	J, T, U		74				[K3W], Left
	1BB36CB6AB	1	J, T, U		74				[K3B], Right
	1CW04RX-FAA	1	J, T, U		74				[K4X], Right
	1CW05RX-FAA	1	J, T, U		74				[K4X], Left
	1BB37WS2AB	1	J, T, U		74				[K3S], Left
7									MOLDING, Rear Door
	1CH92WS2AA	1							Right
	1CH93WS2AA	1							Left
8									MOLDING, A-PILLAR
	1BB32RXFAA	1	J, T, U		74				Right
	1BB33RXFAA	1	J, T, U		74				Left
9	05191598AA	8	J, T, U		49, 74				CLIP, Repair
10									MOLDING, Side Sill, Front
	05116246AA	1	J, T, U		74				Right
	05116247AA	1	J, T, U		74				Left
11									MOLDING, Side Sill, Rear
	05116248AA	1	J, T, U		74				Right
	05116249AA	1	J, T, U		74				Left
12	06502481	5							FASTENER
13	06502481	2							FASTENER
14	06508628AA	2							SCREW
15	06508251AA	2							NUT
16									MOLDING, Roof
	05116250AA	1	J, T, U		74				Right
	05116251AA	1	J, T, U		74				Left
17									TAPE, Front Door
	05116388AA	1							Right
	05116389AA	1							Left
18									TAPE, Black Out, B Pillar

COMPASS/PATRIOT (MK)

SERIES	LINE	BODY	ENGINE	TRANSMISSION
H = HIGHLINE L = LOWLINE P = PREMIUM	J = JEEP - 4WD T = JEEP - 2WD	49 = HATCHBACK TYPE #2 74 = SPORT UTILITY 4-DR TYPE #4	ED3 = 2.4L 4 Cyl DOHC 16V Dual VVT Engine	DD7 = 5-Speed Manual T355 Transmission DEF = 6-Speed Manual Aisin BG6 Trans DAV = Continuously Variable Transmission DAW = Cont.Var. w/Off-Rd Crawl Ratio Trans

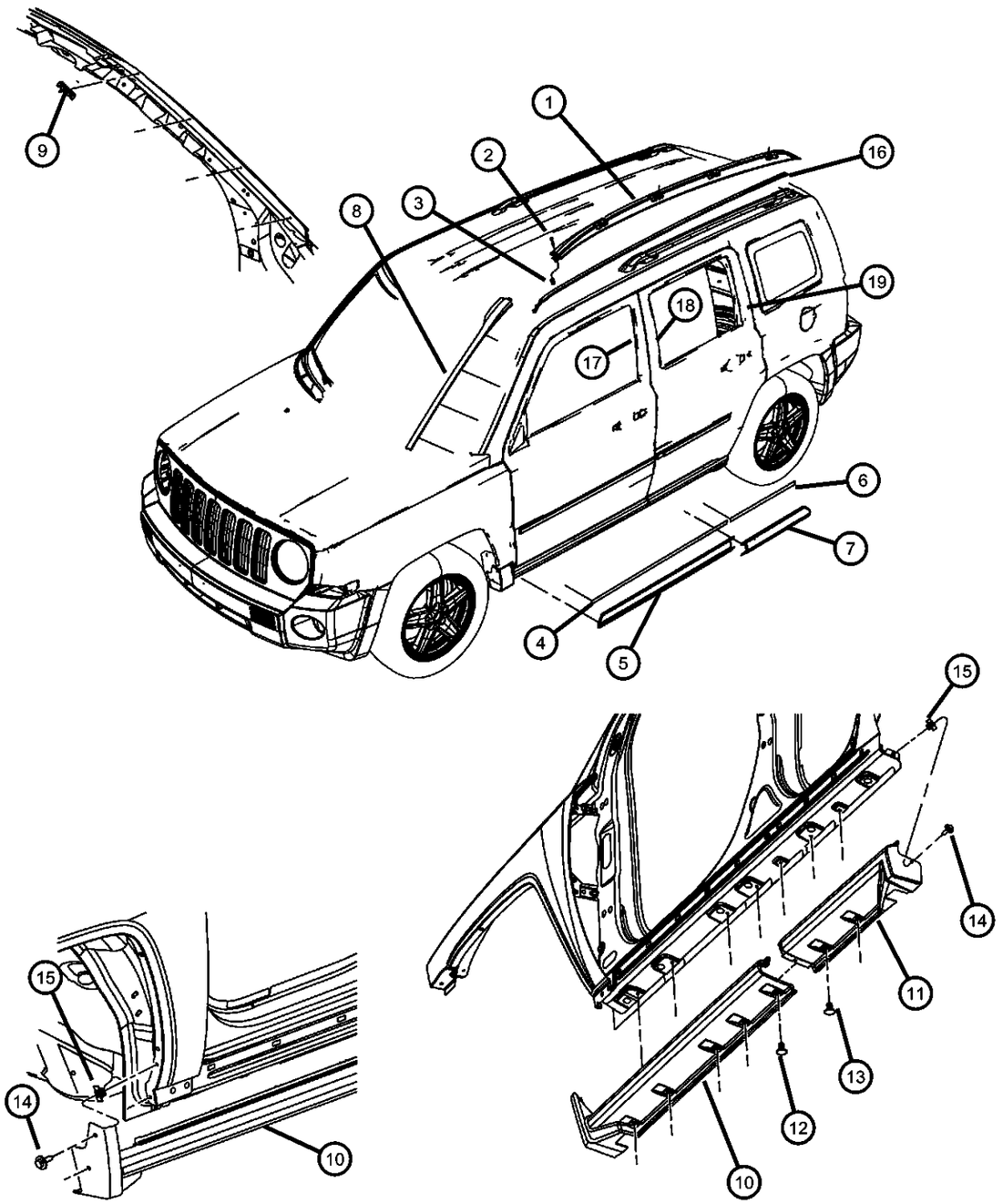

ITEM	PART NUMBER	QTY	LINE	SERIES	BODY	ENGINE	TRANS	TRIM	DESCRIPTION
	05116386AA	1							Right
	05116387AA	1							Left
19									TAPE, C Pillar
	05116390AA	1							Right
	05116391AA	1							Left

COMPASS/PATRIOT (MK)

SERIES	LINE	BODY	ENGINE	TRANSMISSION
H = HIGHLINE L = LOWLINE P = PREMIUM	J = JEEP - 4WD T = JEEP - 2WD	49 = HATCHBACK TYPE #2 74 = SPORT UTILITY 4-DR TYPE #4	ED3 = 2.4L 4 Cyl DOHC 16V Dual VVT Engine	DD7 = 5-Speed Manual T355 Transmission DEF = 6-Speed Manual Aisin BG6 Trans DAV = Continuously Variable Transmission DAW = Cont.Var. w/Off-Rd Crawl Ratio Trans

Group - IMK

Interior Trim

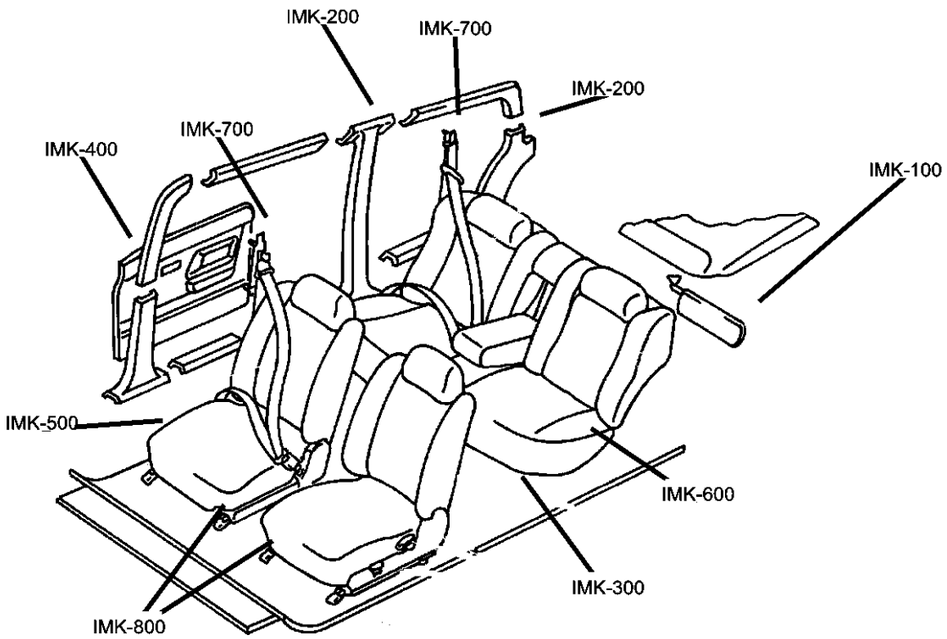

IMK-100 Headliner and Visor 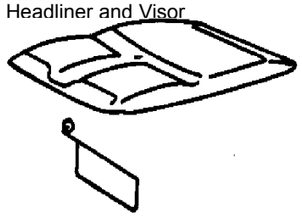	**IMK-1000** Lift Gate Trim 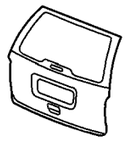	**IMK-200** Panel, Moldings, Scuff Plates 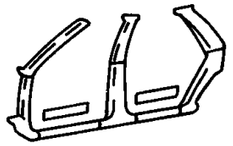	**IMK-300** Carpet 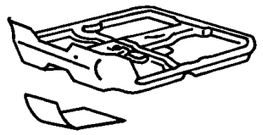
IMK-400 Door Trim Panels 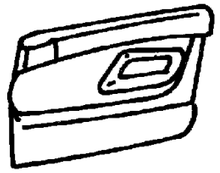	**IMK-500** Front Seats and Attaching Parts 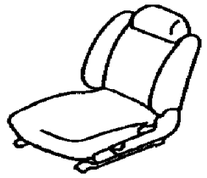	**IMK-600** Rear Seats-Folding 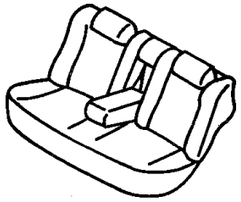	**IMK-700** Seat Belts-Front and Rear 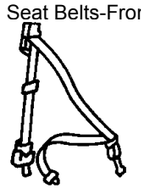
IMK-800 Adjusters, Covers, Shields, and Risers 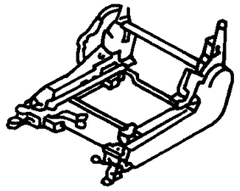			

Group - IMK Interior Trim

Illustration Title — Group-Fig. No.

Headliner and Visor
Headliner & Visors ..... Fig. IMK - 110

Panel, Moldings, Scuff Plates
Trim Panels & Scuff Plates ..... Fig. IMK - 210

Carpet
Carpet, Footrest and Rear Cargo Cover ..... Fig. IMK - 310

Door Trim Panels
Front Door Trim Panel ..... Fig. IMK - 410
Rear Door Trim Panel ..... Fig. IMK - 420

Front Seats and Attaching Parts
Front Seats - Trim Code [AL] ..... Fig. IMK - 510
Front Seats - Trim Code [D7] ..... Fig. IMK - 520
Front Seats - Trim Code [E6] ..... Fig. IMK - 530
Front Seat - Trim Code [K6] ..... Fig. IMK - 540

Rear Seats-Folding
Rear Seat ..... Fig. IMK - 610

Seat Belts-Front and Rear
Seat Belt - Front ..... Fig. IMK - 710
Seat Belt - Rear ..... Fig. IMK - 720

Adjusters, Covers, Shields, and Risers
Attaching Parts, Drivers Seat ..... Fig. IMK - 810
Attaching Parts, Passenger Seat ..... Fig. IMK - 820

Lift Gate Trim
Lift Gate Trim ..... Fig. IMK - 1010

Headliner & Visors
Figure IMK-110

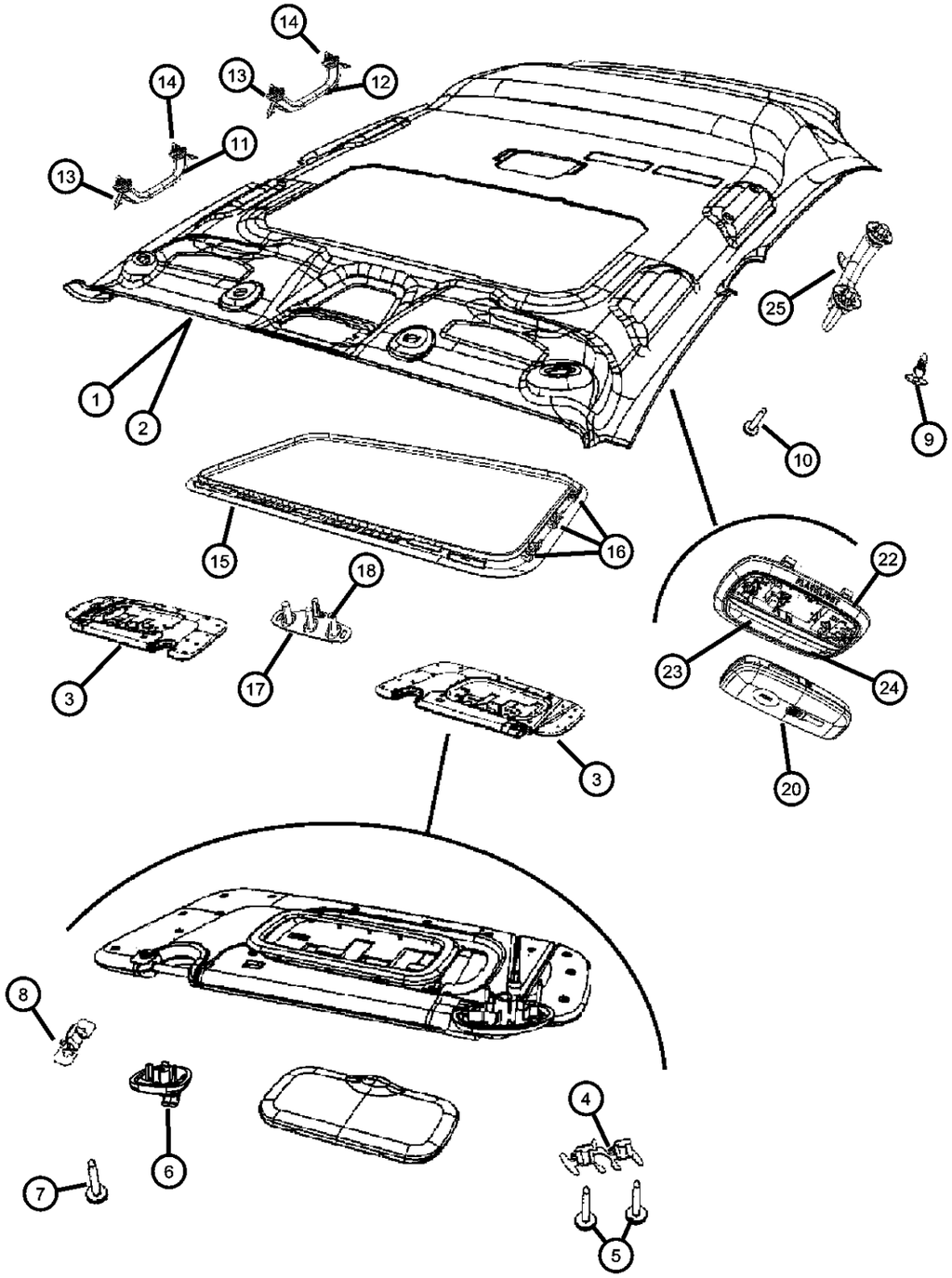

ITEM	PART NUMBER	QTY	LINE	SERIES	BODY	ENGINE	TRANS	TRIM	DESCRIPTION
Sales Codes:									
[GNK] = Rear View Auto Dim Mirror									
[GWG]= Sunroof									
[LCK]= Front Dome Lamp									
[LDB]= Cargo Compartment Lamp									
[LSC]= Security Alarm									
[RSP]= Uconnect Hands Free Commmunication									
[XGD]= Garage Door Opener									
1									HEADLINER, With Sunroof
	1FA36DW1AA	1	J		49			*O0	With [CSR] , Without [LSC]
	1FA37DW1AA	1	J		49			*O0	With [CSR]
	1FA41DW1AA	1	J		49			*O0	With [RSP]
	1FA53DW1AA	1	J		49			*O0	Without [GNK]
	1FA54DW1AA	1	J		49			*O0	With [GNK]
	1GA04DW1AA	1	J, T, U		74			*O0	With [LCD] [LCR] [CSR]
	1GA05DW1AA	1	J, T, U		74			*O0	With [XGD]
	1GA09DW1AA	1	J, T, U		74			*O0	
	1GA08DW1AA	1	J, T, U		74			*O0	With [LSC]
2									HEADLINER, Without Sunroof
	1FA11DW1AA	1	J		49			*O0	With [LCK] [LDB]
	1FA14DW1AA	1	J		49			*O0	Without [LSC]
	1FA38DW1AA	1	J		49			*O0	Without [RSP]
	1FA39DW1AA	1	J		49			*O0	With [RSP]
	1FA43DW1AA	1	J		49			*O0	Without [GNK]
	1GA01DW1AA	1	J, T, U		74			*O0	With [LCK]
	1GA02DW1AA	1	J, T, U		74			*O0	Without [XGD]
	1GA03DW1AA	1	J, T, U		74			*O0	With [XGD]
	1GA06DW1AA	1	J, T, U		74			*O0	With [LSC]
	1FA46DW1AA	1	J		49			*O0	With [GNK]
3									VISOR
	0YD98DW1AA	1	J, T, U		74			*O0	Right
	0YD99DW1AA	1	J, T, U		74			*O0	Left
	1FA12DW1AA	1	J		49			*O0	Right
	1FA13DW1AA	1	J		49			*O0	Left
4									CLIP, Visor

COMPASS/PATRIOT (MK)

SERIES	LINE	BODY	ENGINE	TRANSMISSION
H = HIGHLINE L = LOWLINE P = PREMIUM	J = JEEP - 4WD T = JEEP - 2WD	49 = HATCHBACK TYPE #2 74 = SPORT UTILITY 4-DR TYPE #4	ED3 = 2.4L 4 Cyl DOHC 16V Dual VVT Engine	DD7 = 5-Speed Manual T355 Transmission DEF = 6-Speed Manual Aisin BG6 Trans DAV = Continuously Variable Transmission DAW = Cont.Var. w/Off-Rd Crawl Ratio Trans

AR = use ase required - = Non illustrrated part

Headliner & Visors
Figure IMK-110

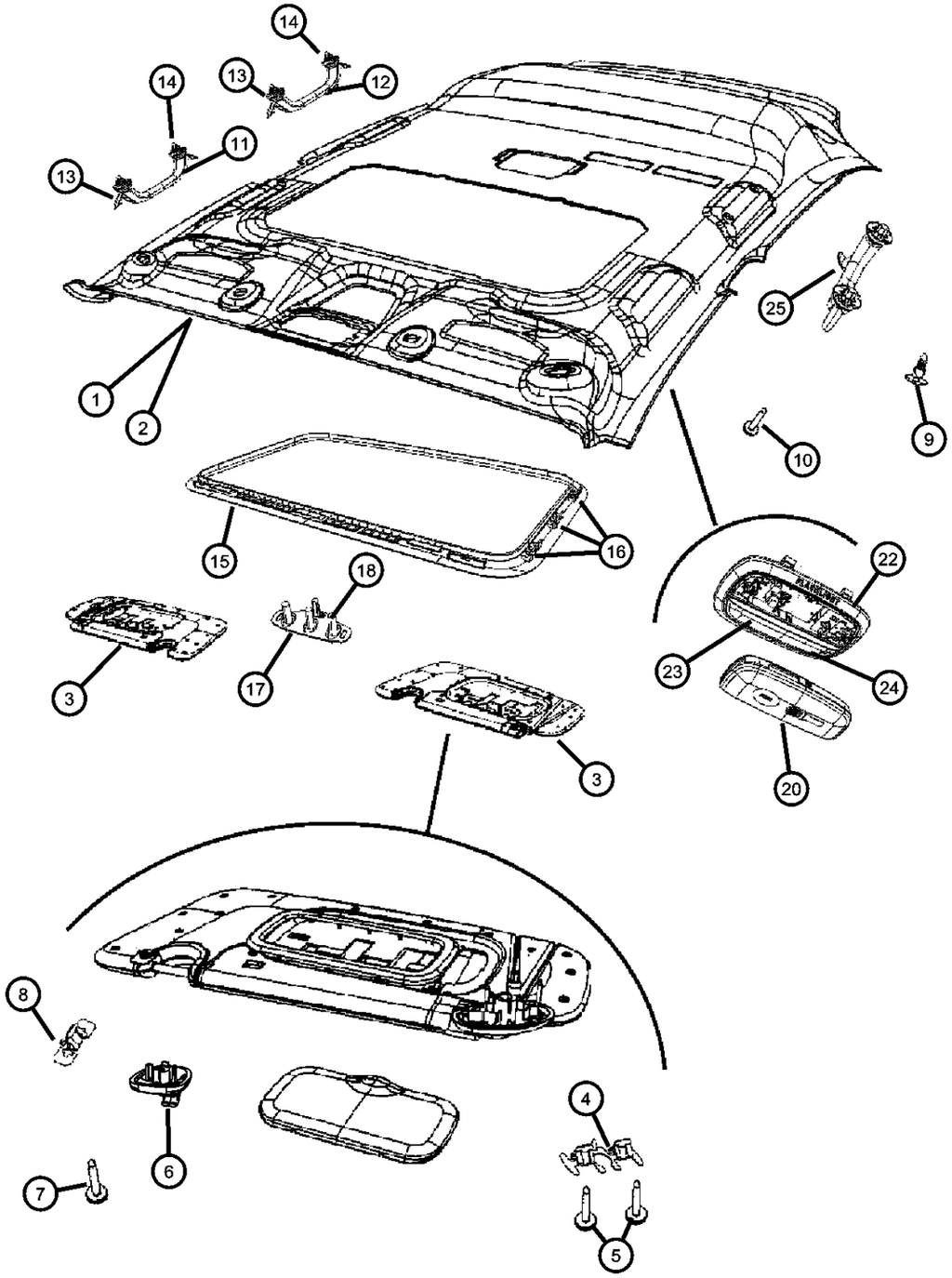

ITEM	PART NUMBER	QTY	LINE	SERIES	BODY	ENGINE	TRANS	TRIM	DESCRIPTION
	05183403AA	2	J, T, U		74			*O0	
		2	J, T, U		49			*O0	
5									SCREW, Visor
	05183402AA	1	J, T, U		49			*O0	
		4	J, T, U		74			*O0	
6									RECEPTACLE, Visor
	1DR31DW1AA	1	J, T, U		49			*O0	
		1	J, T, U		74			*O0	
7									SCREW, Visor Support
	05183404AA	1	J, T, U		49			*O0	
		2	J, T, U		74			*O0	
8									CLIP, Used for Visor Support and Grab Handle
	05183405AA	10	J, T, U		74			*O0	
		4	J, T, U		49			*O0	
9									PLUG, Rear of Headliner
	1DR34DW1AA	1	J, T, U		49			*O0	
		2	J, T, U		74			*O0	
10									SCREW, Coat Hook attach
	00154932AA	1	J, T, U		49			*O0	
		8	J, T, U		74			*O0	
11									HANDLE, Roof Grab, Front
	0QY62DW1AE	1	J, T, U		49			*O0	
		2	J, T, U		74			*O0	
12									HANDLE, Roof Grab, Rear
	0QY66DW1AD	1	J, T, U		49			*O0	Right
		1	J, T, U		74			*O0	Right
	0QY67DW1AD	1	J, T, U		49			*O0	Left
		1	J, T, U		74			*O0	Left
13	05183406AA	1	J		49			*O0	SPACER, Grab Handle
14									SCREW
	00154932AA	1	J, T, U		49			*O0	
		2	J, T, U		74			*O0	

COMPASS/PATRIOT (MK)

SERIES	LINE	BODY	ENGINE	TRANSMISSION
H = HIGHLINE L = LOWLINE P = PREMIUM	J = JEEP - 4WD T = JEEP - 2WD	49 = HATCHBACK TYPE #2 74 = SPORT UTILITY 4-DR TYPE #4	ED3 = 2.4L 4 Cyl DOHC 16V Dual VVT Engine	DD7 = 5-Speed Manual T355 Transmission DEF = 6-Speed Manual Aisin BG6 Trans DAV = Continuously Variable Transmission DAW = Cont.Var. w/Off-Rd Crawl Ratio Trans

AR = use ase required - = Non illustrrated part

Headliner & Visors
Figure IMK-110

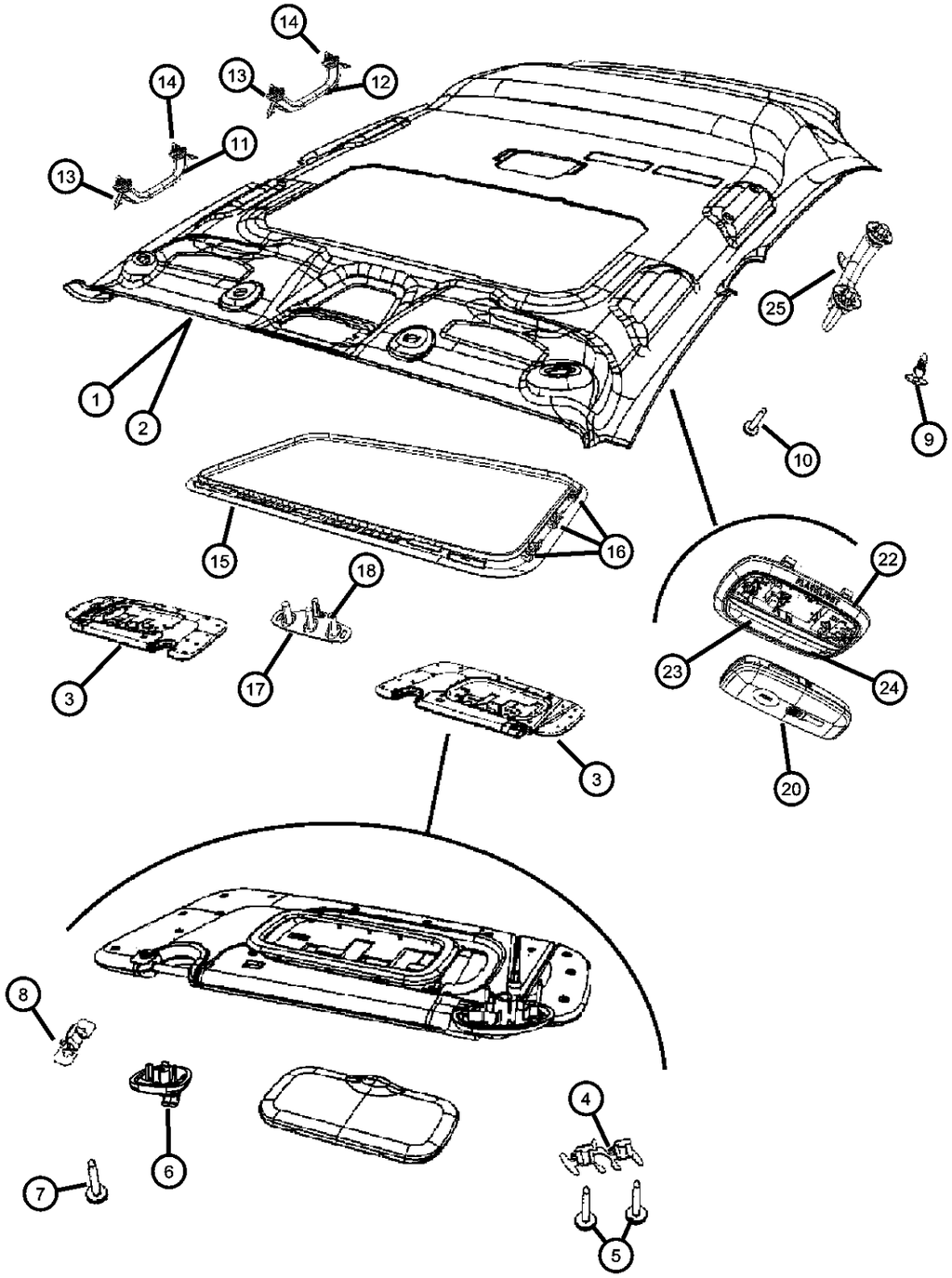

ITEM	PART NUMBER	QTY	LINE	SERIES	BODY	ENGINE	TRANS	TRIM	DESCRIPTION
15									TRIM LACE, Sunroof
	1DR59DW1AA	1	J, T, U		49			*O0	
		1	J, T, U		74			*O0	
16									RETAINER, Holds the Trim Lace
	05183411AA	1	J		49			*O0	
		8	J, T, U		74			*O0	
17									BEZEL, Garage Door Opener
	1BW48DW1AA	1			49			*O0	
		1	J, T, U		74			*O0	
18	1BW49DX9AB	1	J		49			*O0	BUTTON, Garage Door Opener
-19	56044968AA	1						*O0	MODULE, Garage Door Opener
20									FLASHLIGHT
	05183459AA	1	J, T, U		74			*O0	
		1	J, T, U		49			*O0	
-21									BATTERY, Flashlight
	05183454AA	1	J, T, U		74			*O0	
		1	J, T, U		49			*O0	
22									LAMP, Dome
	05183445AA	1	J, T, U		74			*O0	
		1	J, T, U		49			*O0	
23									LENS, Dome Lamp
	05183449AA	1	J, T, U		74			*O0	
		1	J, T, U		49			*O0	
24									BULB
	05183471AA	1	J, T, U		74			*O0	
		1	J, T, U		49			*O0	
25									HOOK, Coat
	1GA29DW1AA	2	J, T, U		74			*O0	
	1DR24DW1AA	1	J, T, U		49			*O0	
-26	00154786	1	J, T, U		49			*O0	SCREW

COMPASS/PATRIOT (MK)

SERIES	LINE	BODY	ENGINE	TRANSMISSION
H = HIGHLINE L = LOWLINE P = PREMIUM	J = JEEP - 4WD T = JEEP - 2WD	49 = HATCHBACK TYPE #2 74 = SPORT UTILITY 4-DR TYPE #4	ED3 = 2.4L 4 Cyl DOHC 16V Dual VVT Engine	DD7 = 5-Speed Manual T355 Transmission DEF = 6-Speed Manual Aisin BG6 Trans DAV = Continuously Variable Transmission DAW = Cont.Var. w/Off-Rd Crawl Ratio Trans

AR = use ase required - = Non illustrrated part

Trim Panels & Scuff Plates
Figure IMK-210

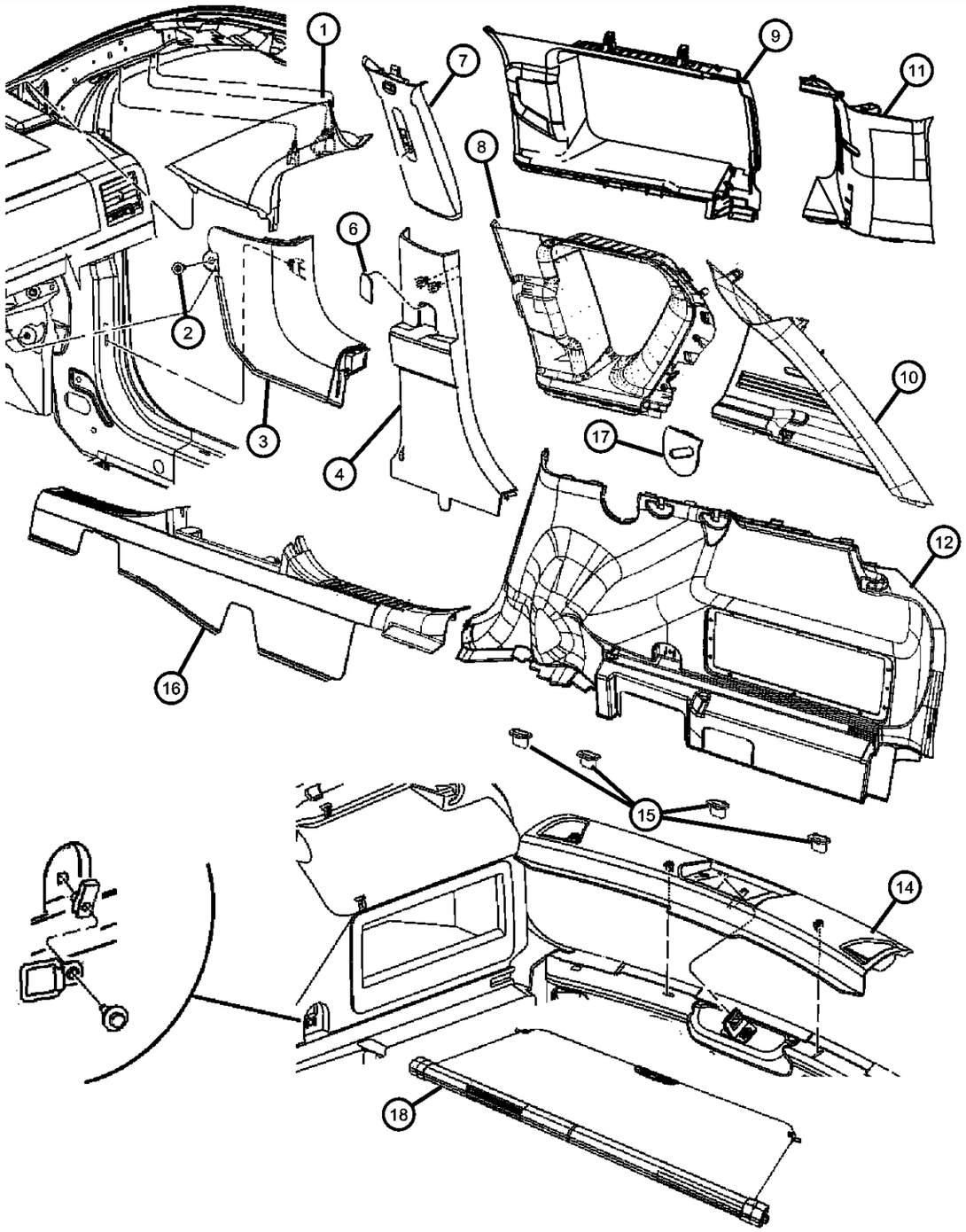

ITEM	PART NUMBER	QTY	LINE	SERIES	BODY	ENGINE	TRANS	TRIM	DESCRIPTION
Sales Codes:									
[AGV]= With Flexible Seating Group									
[RFS]= 2 Articulating Liftgate Speakers									
1									MOLDING, Windshield Garnish
	0YF54DW1AA	1			49			*O0	[DA], Right
		1			49			*O0	[KA], Right
	0YF55DW1AA	1			49			*O0	[DA], Left
		1			49			*O0	[KA], Left
	1AX70DW1AA	1	J, T, U		74			*O0	[DA], Right
		1	J, T, U		74			*O0	[KA], Right
	1AX71DW1AA	1	J, T, U		74			*O0	[DA], Left
		1	J, T, U		74			*O0	[KA], Left
2	06504561	2	J, T, U		49, 74				NUT
3									PANEL, Cowl Side
	0YF64DK7AB	1	J		49			*O0	[KA], Right
	0YF64XDVAB	1	J		49			*O0	[DA], Right
	0YF65DK7AB	1	J		49			*O0	[KA], Left
	0YF65XDVAB	1	J		49			*O0	[DA], Left
4									COVER, B Pillar, Lower
	0YF60DK7AC	1	J, T, U		49, 74			*O0	[KA], Right
	0YF60XDVAC	1	T, U, J		49, 74			*O0	[DA], Right
	0YF61DK7AC	1	J, T, U		49, 74			*O0	[KA], Left
	0YF61XDVAC	1	J, T, U		49, 74			*O0	[DA], Left
-5									PLUG, B Pillar
	0XH25DW1AB	2						*O0	[DA] , Without [CGS]
		2						*O0	[KA] , Without [CGS]
		2	J		49			*O0	[DA] , Without [CGS] or [CJ4]
		2	J		49			*O0	[KA] , Without [CGS] or [CJ4]
	0XH41DW1AB	2						*O0	[DA] , With [CGS]
		2						*O0	[KA] , With [CGS]
		2	J		49			*O0	[DA] , With [CGS] or [CJ4]
		2	J		49			*O0	[KA] , With [CGS] or [CJ4]
6									COVER, Seat Belt Access Hole

COMPASS/PATRIOT (MK)

SERIES	LINE	BODY	ENGINE	TRANSMISSION
H = HIGHLINE L = LOWLINE P = PREMIUM	J = JEEP - 4WD T = JEEP - 2WD	49 = HATCHBACK TYPE #2 74 = SPORT UTILITY 4-DR TYPE #4	ED3 = 2.4L 4 Cyl DOHC 16V Dual VVT Engine	DD7 = 5-Speed Manual T355 Transmission DEF = 6-Speed Manual Aisin BG6 Trans DAV = Continuously Variable Transmission DAW = Cont.Var. w/Off-Rd Crawl Ratio Trans

Trim Panels & Scuff Plates
Figure IMK-210

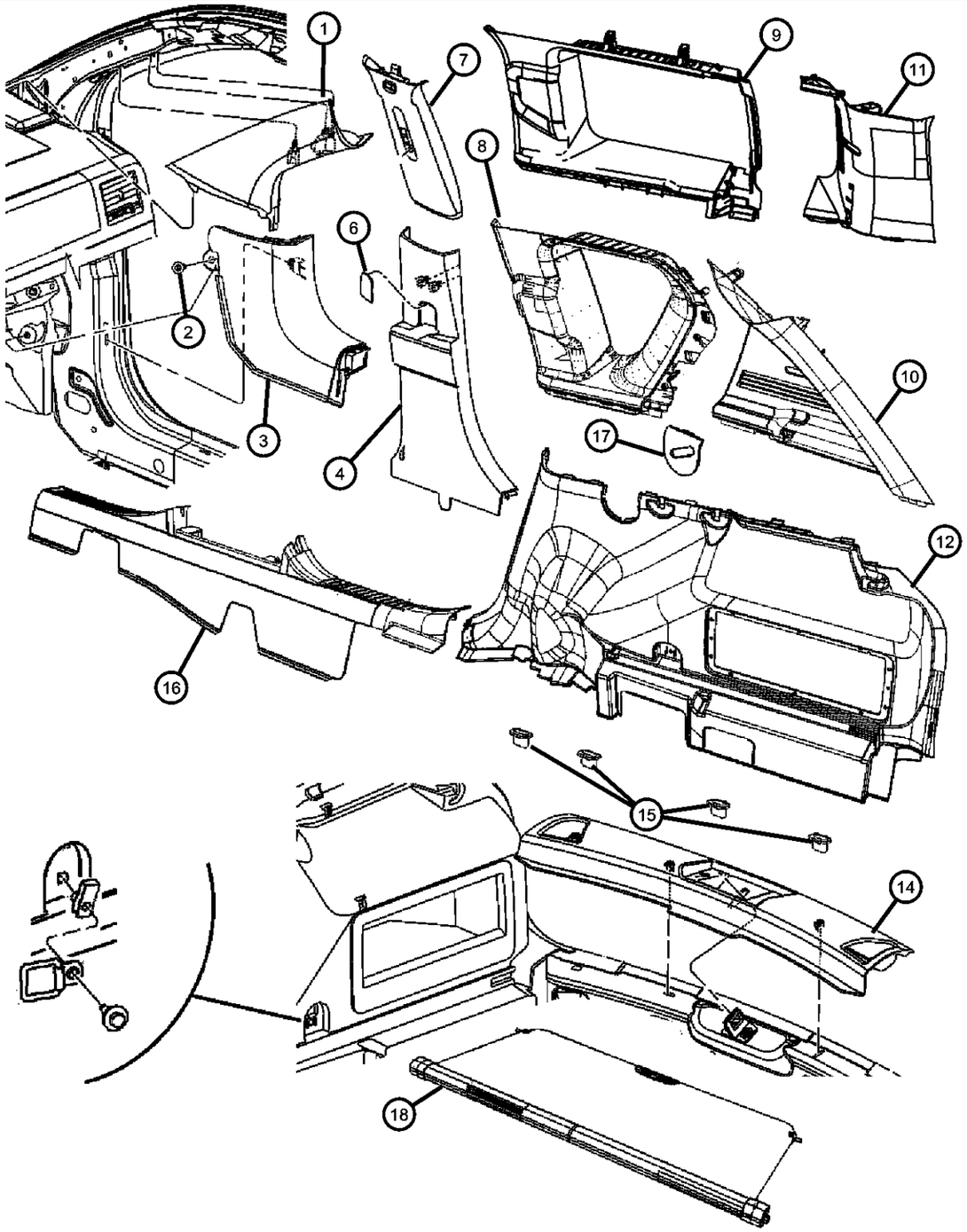

ITEM	PART NUMBER	QTY	LINE	SERIES	BODY	ENGINE	TRANS	TRIM	DESCRIPTION
	0YD78DK7AB	2	J, T, U		49, 74			*O0	[KA]
	0YD78XDVAB	2	J, T, U		49, 74			*O0	[DA]
7									COVER, Center Pillar
	0YF58DW1AB	1	J, T, U		49			*O0	[DA], Right
		1	J, T, U		49			*O0	[KA], Right
	0YF59DW1AB	1	J, T, U		49			*O0	[DA], Left
		1	J, T, U		49			*O0	[KA], Left
	1AX74DW1AA	1	J, T, U		74			*O0	[DA], Right
		1	J, T, U		74			*O0	[KA], Right
	1AX75DW1AA	1	J, T, U		74			*O0	[DA], Left
		1	J, T, U		74			*O0	[KA], Left
	1ET04DW1AA	1	J, T, U		49			*O0	[DA] , With [CGS] or [CJ4], Right
		1	J, T, U		49			*O0	[KA] , With [CGS] or [CJ4], Right
	1ET05DW1AA	1	T, U, J		49			*O0	[DA] , With [CGS] or [CJ4], Left
		1	J, T, U		49			*O0	[KA] , With [CGS] or [CJ4], Left
	1EX68DW1AA	1	J, T, U		74			*O0	[DA] , With [CGS] or [CJ4], Right
		1	J, T, U		74			*O0	[KA] , With [CGS] or [CJ4], Right
	1EX69DW1AB	1	J, T, U		74			*O0	[DA] , With [CGS] or [CJ4], Left
		1	J, T, U		74			*O0	[KA] , With [CGS] or [CJ4], Left
8									PANEL, C Pillar, 49 Body Style
	0YF70DW1AB	1	J, T, U		49			*O0	[DA], Right
		1	J, T, U		49			*O0	[KA], Right
	0YF71DW1AB	1	J, T, U		49			*O0	[DA], Left
		1	J, T, U		49			*O0	[KA], Left
9									PANEL, C Pillar, 74 Body Style
	1AX76DK7AA	1	J, T, U		74			*O0	[KA], Right
	1AX76XDVAA	1	J, T, U		74			*O0	[DA], Right
	1AX77DK7AA	1	U, J, T		74			*O0	[KA], Left
	1AX77XDVAA	1	J, T, U		74			*O0	[DA], Left
10									PANEL, D Pillar, 49 Body Style
	0YE52DW1AA	1			49			*O0	[DA], Right
		1			49			*O0	[KA], Right

COMPASS/PATRIOT (MK)

SERIES	LINE	BODY	ENGINE	TRANSMISSION
H = HIGHLINE L = LOWLINE P = PREMIUM	J = JEEP - 4WD T = JEEP - 2WD	49 = HATCHBACK TYPE #2 74 = SPORT UTILITY 4-DR TYPE #4	ED3 = 2.4L 4 Cyl DOHC 16V Dual VVT Engine	DD7 = 5-Speed Manual T355 Transmission DEF = 6-Speed Manual Aisin BG6 Trans DAV = Continuously Variable Transmission DAW = Cont.Var. w/Off-Rd Crawl Ratio Trans

AR = use ase required - = Non illustrrated part

Trim Panels & Scuff Plates
Figure IMK-210

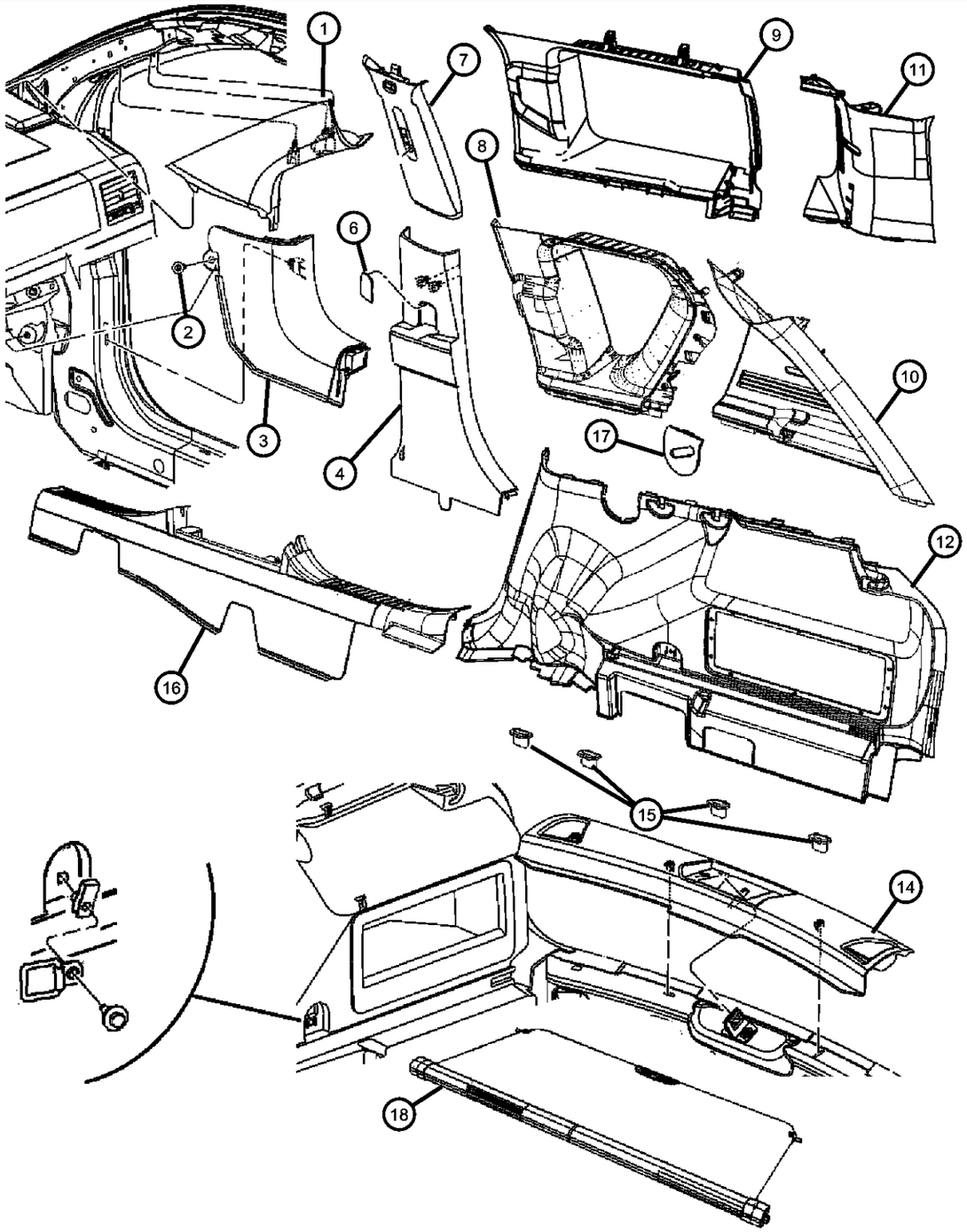

ITEM	PART NUMBER	QTY	LINE	SERIES	BODY	ENGINE	TRANS	TRIM	DESCRIPTION
	0YE53DW1AA	1						*O0	[DA], Left
		1						*O0	[KA], Left
11									PANEL, D Pillar, 74 Body Style
	1AX78DK7AA	1	J, T, U		74			*O0	[KA], Right
	1AX78XDVAA	1	J, T, U		74			*O0	[DA], Right
	1AX79DK7AA	1	J, T, U		74			*O0	[KA], Left
	1AX79XDVAA	1	J, T, U		74			*O0	[DA], Left
12									PANEL, Quarter Trim
	0YF66DK7AB	1	J, T, U		49			*O0	[KA] , Without [RFS], Right
	0YF66XDVAB	1	J, T, U		49			*O0	[DA] , Without [RFS], Right
	0YF67DK7AB	1	J, T, U		49			*O0	[KA], Left
	0YF67XDVAB	1	J, T, U		49			*O0	[DA], Left
	1BE92DK7AD	1	J, T, U		49			*O0	[KA] , With [RFS], Right
	1BE92XDVAD	1	T, U, J		49			*O0	[DA] , With [RFS], Right
	1BP82DK7AB	1	J, T, U		74			*O0	[KA] , Without [RFS], Right
	1BP82XDVAB	1	J, T, U		74			*O0	[DA] , Without [RFS], Right
	1BP83DK7AB	1	J, T, U		74			*O0	[KA], Left
	1BP83XDVAB	1	J, T, U		74			*O0	[DA], Left
	1BP84DK7AB	1	J, T, U		74			*O0	[KA], Right
	1BP84XDVAB	1	J, T, U		74			*O0	[DA], Right
-13	06506490AA	4							CLIP, Molding
14									PLATE, Rear Door Scuff
	0YF39DK7AA	1			49			*O0	[KA]
	0YF39XDVAA	1			49			*O0	[DA]
	1BP85DK7AA	1	J, T, U		74			*O0	[KA]
	1BP85XDVAA	1	J, T, U		74			*O0	[DA]
15	06505670AA	4	J, T, U		49, 74				NUT, Plastic
16									PLATE, Scuff
	0YF04DK7AC	1	J, T, U		49, 74			*O0	[KA], Right
	0YF04XDVAC	1	J, T, U		49, 74			*O0	[DA], Right
	0YF05DK7AC	1	J, T, U		49, 74			*O0	[KA], Left
	0YF05XDVAC	1	J, T, U		49, 74			*O0	[DA], Left

COMPASS/PATRIOT (MK)

SERIES	LINE	BODY	ENGINE	TRANSMISSION
H = HIGHLINE L = LOWLINE P = PREMIUM	J = JEEP - 4WD T = JEEP - 2WD	49 = HATCHBACK TYPE #2 74 = SPORT UTILITY 4-DR TYPE #4	ED3 = 2.4L 4 Cyl DOHC 16V Dual VVT Engine	DD7 = 5-Speed Manual T355 Transmission DEF = 6-Speed Manual Aisin BG6 Trans DAV = Continuously Variable Transmission DAW = Cont.Var. w/Off-Rd Crawl Ratio Trans

AR = use ase required - = Non illustrrated part

<< RETURN TO GROUP INDEX

Trim Panels & Scuff Plates
Figure IMK-210

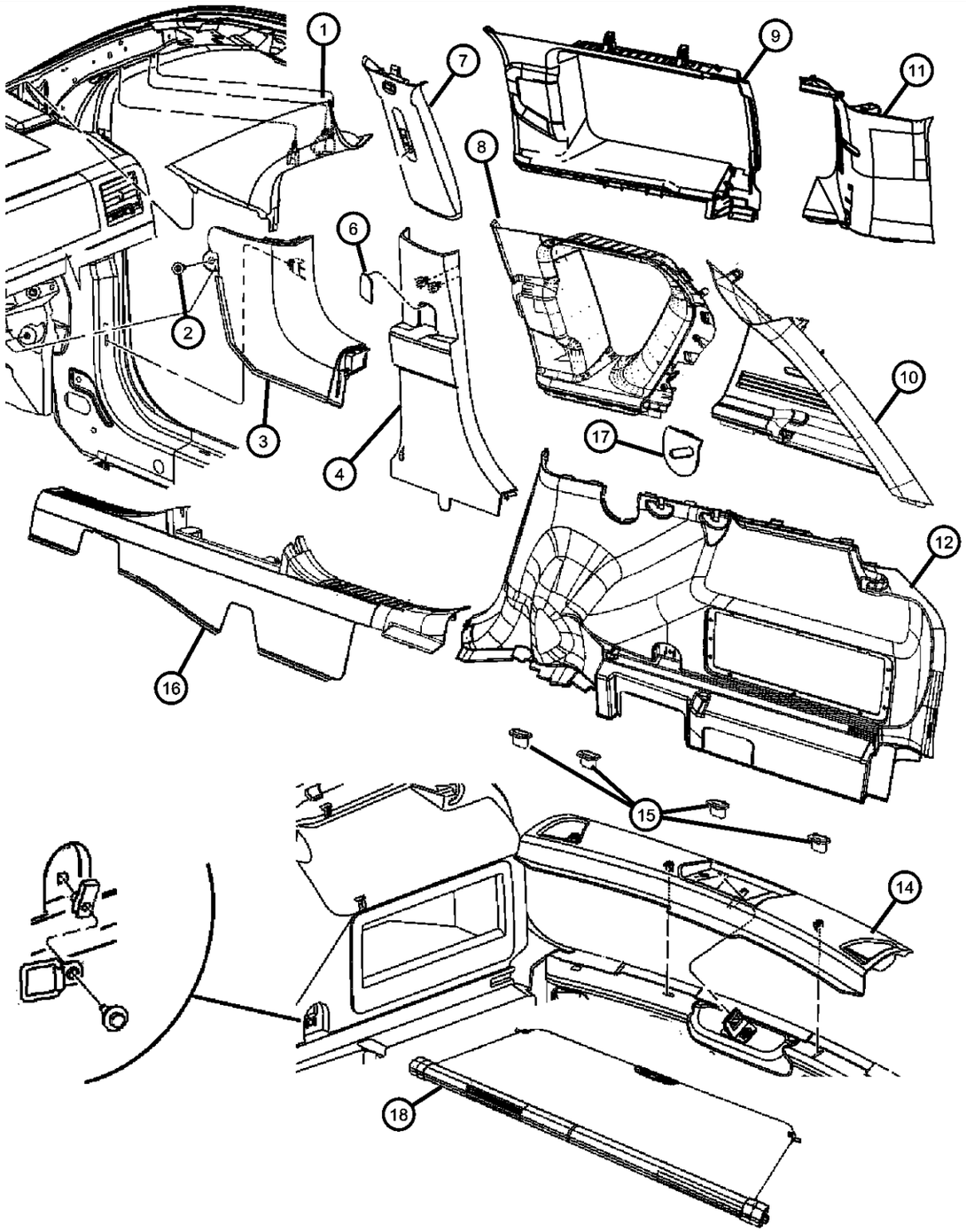

ITEM	PART NUMBER	QTY	LINE	SERIES	BODY	ENGINE	TRANS	TRIM	DESCRIPTION
17									PLATE, Striker
	0YF68DK7AC	1	J, T, U		49, 74			*O0	[KA] , Without [AGV], Right
	0YF68XDVAC	1	J, T, U		49, 74			*O0	[DA] , Without [AGV], Right
	0YF69DK7AC	1	J, T, U		49, 74			*O0	[DA] , Without [AGV], Left
	0YF69XDVAC	1	J, T, U		49, 74			*O0	[KA] , Without [AGV], Left
	1BZ60DK7AB	1	J		49			*O0	[KA] , With [AGV], Right
	1BZ60XDVAB	1	J		49			*O0	[DA] , With [AGV], Right
	1BZ60DK7AC	1	J, T, U		49, 74			*O0	[KA] , With [AGV], Right
	1BZ60XDVAC	1	J, T, U		49, 74			*O0	[DA] , With [AGV], Right
	1BZ61DK7AB	1	J		49			*O0	[KA] , With [AGV], Left
	1BZ61XDVAB	1	J		49			*O0	[DA] , With [AGV], Left
	1BZ61DK7AC	1	J, T, U		49, 74			*O0	[KA] , With [AGV], Left
	1BZ61XDVAC	1	J, T, U		49, 74			*O0	[DA] , With [AGV], Left
18									COVER, Tonneau
	0YF75DK7AA	1						*O0	[KA]
	0YF75XDVAA	1						*O0	[DA]

COMPASS/PATRIOT (MK)

SERIES	LINE	BODY	ENGINE	TRANSMISSION
H = HIGHLINE L = LOWLINE P = PREMIUM	J = JEEP - 4WD T = JEEP - 2WD	49 = HATCHBACK TYPE #2 74 = SPORT UTILITY 4-DR TYPE #4	ED3 = 2.4L 4 Cyl DOHC 16V Dual VVT Engine	DD7 = 5-Speed Manual T355 Transmission DEF = 6-Speed Manual Aisin BG6 Trans DAV = Continuously Variable Transmission DAW = Cont.Var. w/Off-Rd Crawl Ratio Trans

Carpet, Footrest and Rear Cargo Cover
Figure IMK-310

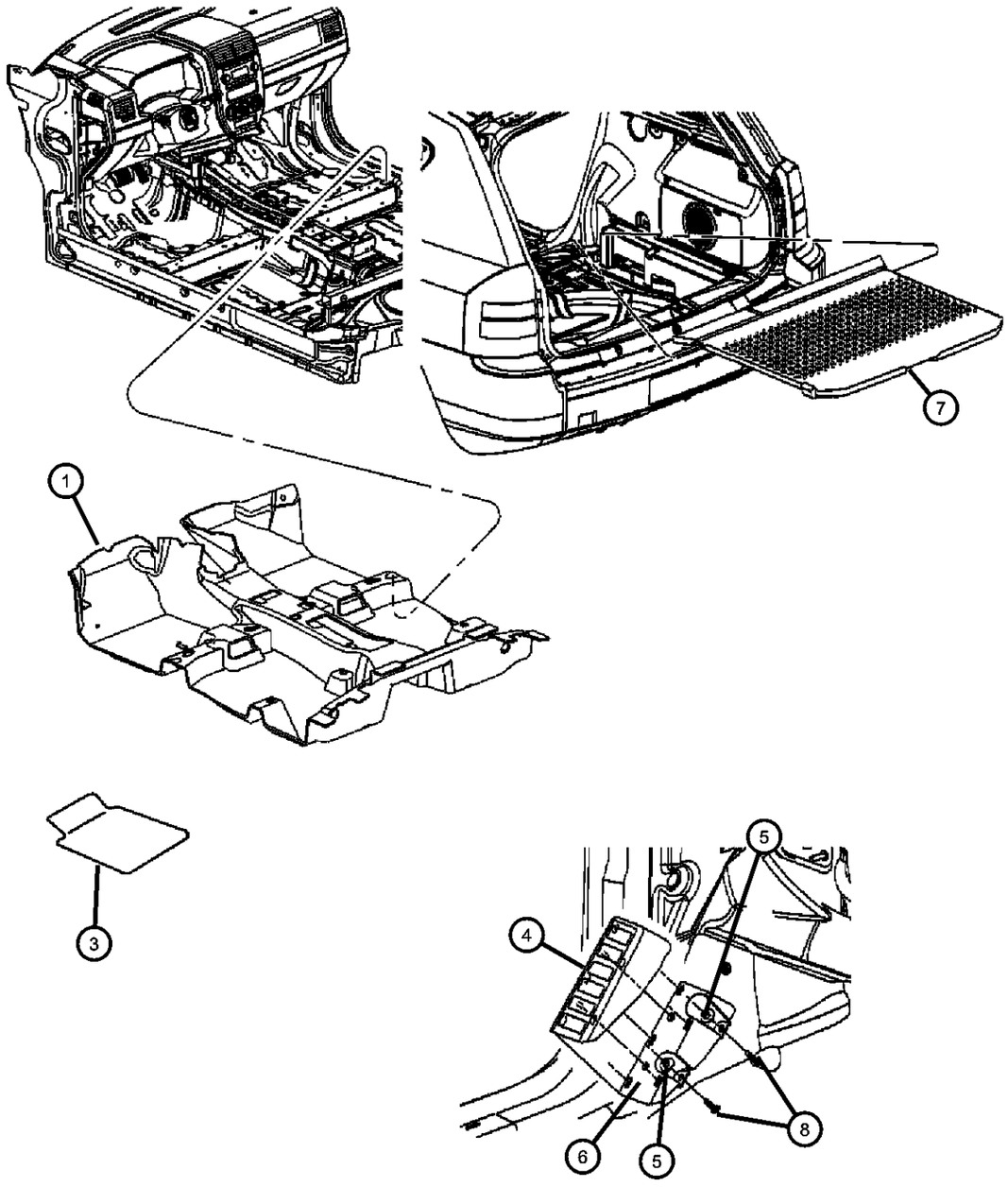

ITEM	PART NUMBER	QTY	LINE	SERIES	BODY	ENGINE	TRANS	TRIM	DESCRIPTION
1									CARPET, Floor
	1AR18DK7AC	1	J, T		49, 74			*O0	[KA]
	1AR20DK7AC	1	U		49, 74			*O0	[KA]
	1AR20XDVAC	1	U		49, 74			*O0	[DA]
	1AR18XDVAC	1	J, T		49, 74			*O0	[DA]
-2									CLIP, Floor Mat Retention
	05086365AA	1	J, T		49			*O0	Driver Side
		1	J, T		74			*O0	Driver Side
3									MAT KIT, Floor - Complete
	1AJ39DK7AB	1						*O0	[KA] , With [CLE]
	1AJ39XDVAB	1						*O0	[DA] , With [CLE]
	82210118	1			49, 74				[KA]
	82210119	1			49, 74				[DA]
4									SUPPORT, Footrest
	1BS63DK7AD	1	J, T		49, 74			*O0	[KA]
	1BS63XDVAD	1	J, T		49, 74			*O0	[DA]
5	06101444	2	J, T						NUT AND WASHER, Hex, M6x1.0
6									SUPPORT, Footrest
	1DD62DK7AB	1	J, T		49, 74			*O0	[KA]
	1DD62XDVAB	1	J, T		49, 74			*O0	[DA]
7									COVER, Rear Cargo Floor
	1BL86DK7AC	1	J, T, U		49, 74			*O0	[KA]
	1BL86XDVAC	1	J, T, U		49, 74			*O0	[DA]
8	1BL86XDVAC	1							STUD, Serviced in the Dash Panel, (NOT SERVICED),

COMPASS/PATRIOT (MK)

SERIES	LINE	BODY	ENGINE	TRANSMISSION
H = HIGHLINE	J = JEEP - 4WD	49 = HATCHBACK TYPE #2	ED3 = 2.4L 4 Cyl DOHC 16V Dual VVT Engine	DD7 = 5-Speed Manual T355 Transmission
L = LOWLINE	T = JEEP - 2WD	74 = SPORT UTILITY 4-DR TYPE #4		DEF = 6-Speed Manual Aisin BG6 Trans
P = PREMIUM				DAV = Continuously Variable Transmission
				DAW = Cont.Var. w/Off-Rd Crawl Ratio Trans

Front Door Trim Panel
Figure IMK-410

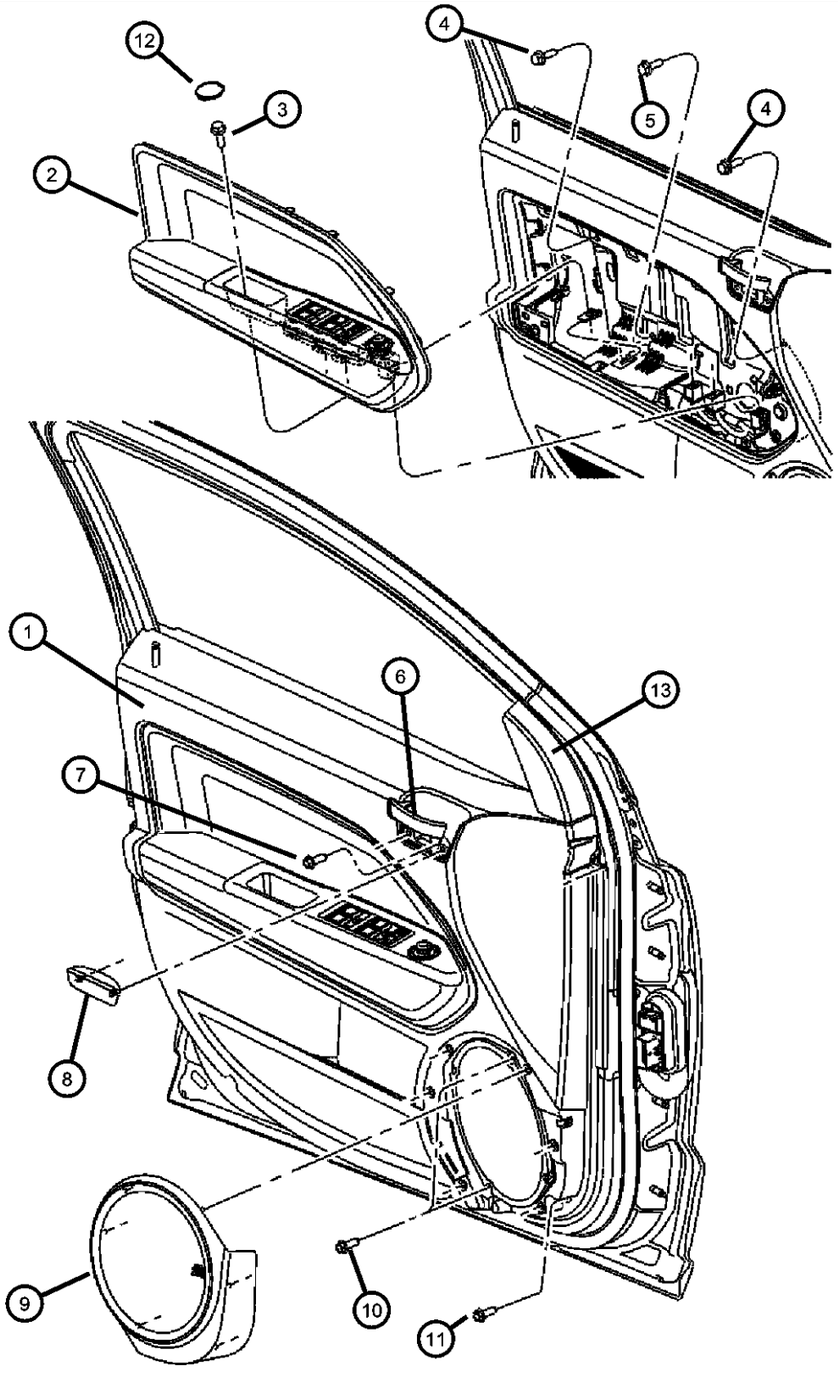

ITEM	PART NUMBER	QTY	LINE	SERIES	BODY	ENGINE	TRANS	TRIM	DESCRIPTION
1									PANEL, Door Trim Front
	1FJ941DAAA	1	U		49			*D7	[DA], Right
		1	J, T		49			*D7	[DA], Right
		1	J, T		49			*AL	[DA], Right
		1	U		49			*AL	[DA], Right
	1FJ941KAAA	1	J, T		49			*AL	[KA], Right
		1	U		49			*AL	[KA], Right
		1	U		49			*D7	[KA], Right
		1	J, T		49			*D7	[KA], Right
	1FJ941KAAB	1	J, T		49			*K6	[KA], Right
	1FJ951DAAA	1	U		49			*AL	[DA], Left
		1	J, T		49			*D7	[DA], Left
		1	J, T		49			*AL	[DA], Left
		1	U		49			*D7	[DA], Left
	1FJ951KAAA	1	J, T		49			*AL	[KA], Left
		1	U		49			*D7	[KA], Left
		1	U		49			*AL	[KA], Left
		1	J, T		49			*D7	[KA], Left
	1FJ951KAAB	1	J, T		49			*K6	[KA], Left
	1FJ961DAAA	1	U		74			*AL	[DA], Right
		1	U		74			*D7	[DA], Right
		1	U		74			*E6	[DA], Right
		1	J, T		74			*AL	[DA], Right
		1	J, T		74			*D7	[DA], Right
		1	J, T		74			*E6	[DA], Right
	1FJ961KAAA	1	U		74			*AL	[KA], Right
		1	U		74			*D7	[KA], Right
		1	U		74			*E6	[KA], Right
		1	J, T		74			*E6	[KA], Right
		1	J, T		74			*AL	[KA], Right
		1	J, T		74			*D7	[KA], Right
	1FJ971DAAA	1	U		74			*AL	[DA], Left
		1	U		74			*D7	[DA], Left

COMPASS/PATRIOT (MK)

SERIES	LINE	BODY	ENGINE	TRANSMISSION
H = HIGHLINE L = LOWLINE P = PREMIUM	J = JEEP - 4WD T = JEEP - 2WD	49 = HATCHBACK TYPE #2 74 = SPORT UTILITY 4-DR TYPE #4	ED3 = 2.4L 4 Cyl DOHC 16V Dual VVT Engine	DD7 = 5-Speed Manual T355 Transmission DEF = 6-Speed Manual Aisin BG6 Trans DAV = Continuously Variable Transmission DAW = Cont.Var. w/Off-Rd Crawl Ratio Trans

Front Door Trim Panel
Figure IMK-410

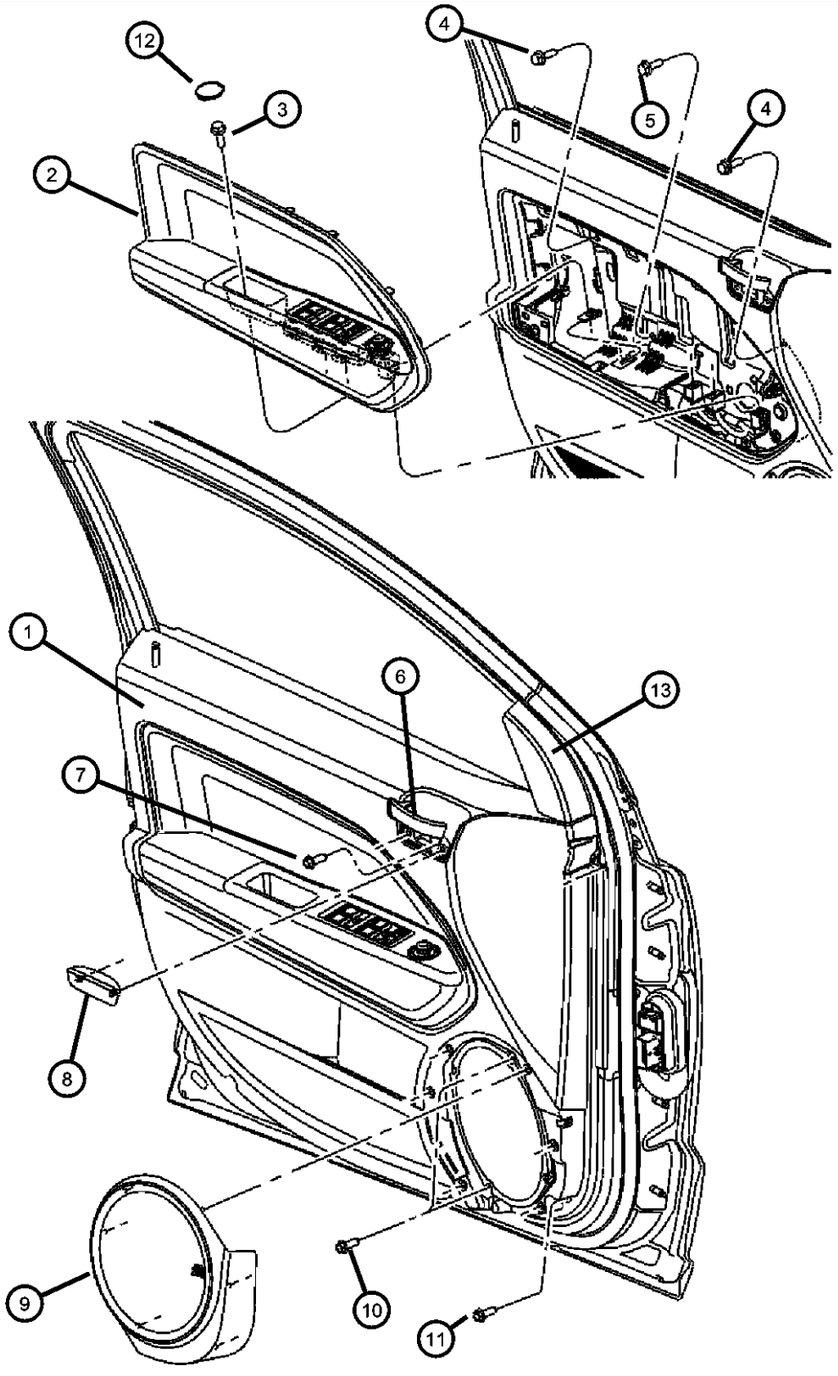

ITEM	PART NUMBER	QTY	LINE	SERIES	BODY	ENGINE	TRANS	TRIM	DESCRIPTION
		1	U		74			*E6	[DA], Left
		1	J, T		74			*AL	[DA], Left
		1	J, T		74			*D7	[DA], Left
		1	J, T		74			*E6	[DA], Left
	1FJ971KAAA	1	U		74			*D7	[KA], Left
		1	U		74			*E6	[KA], Left
		1	U		74			*AL	[KA], Left
		1	J, T		74			*D7	[KA], Left
		1	J, T		74			*E6	[KA], Left
		1	J, T		74			*AL	[KA], Left
2									BOLSTER, Front Door
	1AA181DAAA	1	J		49			*D7	[DA] , With [GTN], Right
		1	J		49			*AL	[DA] , With [GTN], Right
	1AA181KAAA	1	J		49			*D7	[KA] , With [GTN], Right
		1	J		49			*AL	[KA] , With [GTN], Right
	1AA191DAAA	1	J		49			*D7	[DA] , With [GTN], Left
		1	J		49			*AL	[DA] , With [GTN], Left
	1AA191KAAA	1	J		49			*D7	[KA] , With [GTN], Left
		1	J		49			*AL	[KA] , With [GTN], Left
	1AA22BDAAA	1	J		49			*D7	[DA] , With [GTP], Right
		1	J		49			*AL	[DA] , With [GTP], Right
	1AA22DKAAA	1	J		49			*D7	[KA] , With [GTP], Right
		1	J		49			*AL	[KA] , With [GTP], Right
	1AA23BDAAA	1	J		49			*D7	[DA] , With [GTP], Left
		1	J		49			*AL	[DA] , With [GTP], Left
	1AA23DKAAA	1	J		49			*D7	[KA] , With [GTP], Left
		1	J		49			*AL	[KA] , With [GTP], Left
	1AX461DAAA	1	U		74			*E6	[DA] , With [GUL], Right
		1	U		49			*D7	[DA] , With [GUL], Right
		1	U		49			*AL	[DA] , With [GUL], Right
	1AX461KAAA	1	U		49			*D7	[KA] , With [GUL], Right
		1	U		74			*E6	[KA] , With [GUL], Right

COMPASS/PATRIOT (MK)

SERIES	LINE	BODY	ENGINE	TRANSMISSION
H = HIGHLINE L = LOWLINE P = PREMIUM	J = JEEP - 4WD T = JEEP - 2WD	49 = HATCHBACK TYPE #2 74 = SPORT UTILITY 4-DR TYPE #4	ED3 = 2.4L 4 Cyl DOHC 16V Dual VVT Engine	DD7 = 5-Speed Manual T355 Transmission DEF = 6-Speed Manual Aisin BG6 Trans DAV = Continuously Variable Transmission DAW = Cont.Var. w/Off-Rd Crawl Ratio Trans

Front Door Trim Panel
Figure IMK-410

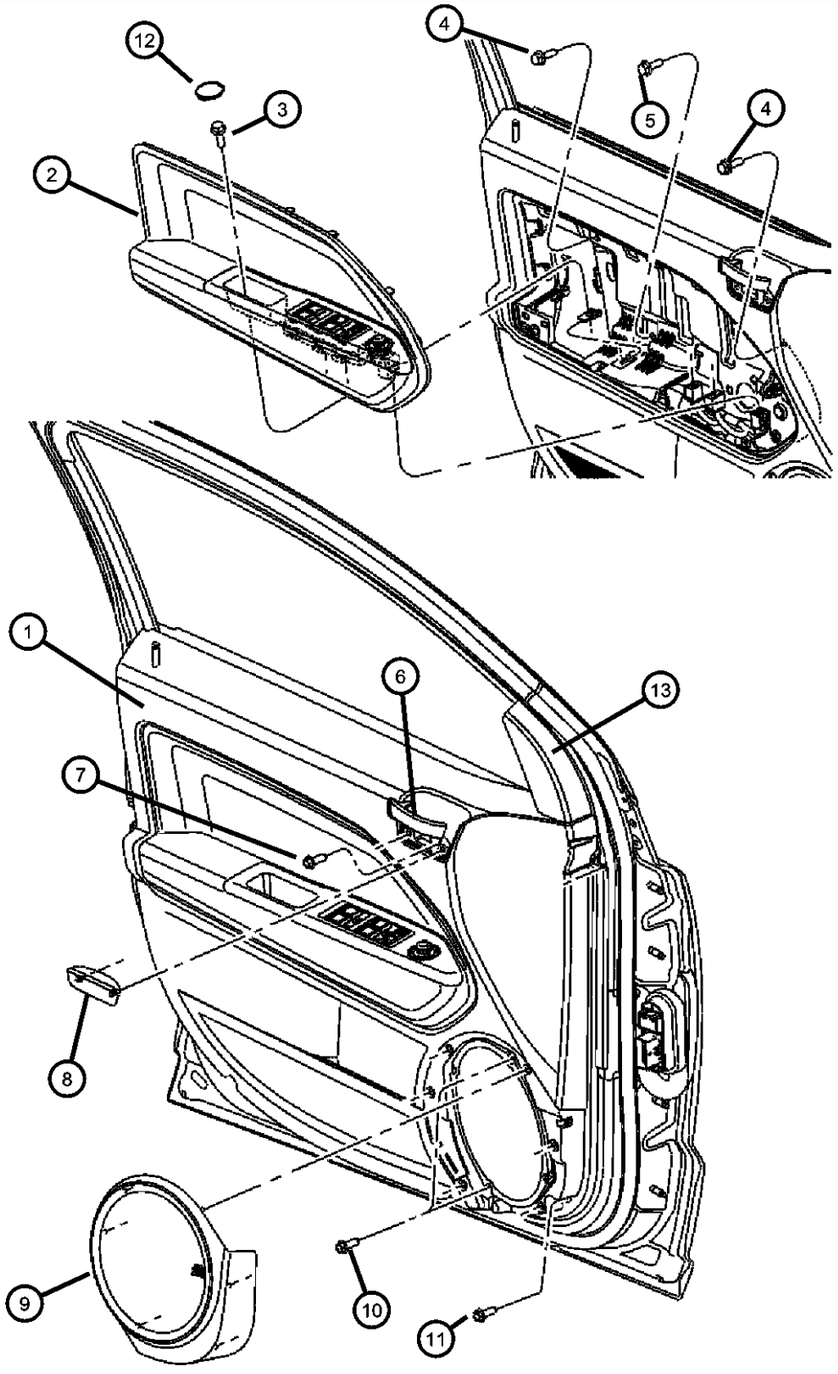

ITEM	PART NUMBER	QTY	LINE	SERIES	BODY	ENGINE	TRANS	TRIM	DESCRIPTION
		1	U		74			*AL	[KA] , With [GUL], Right
	1AX471DAAA	1	U		49			*D7	[DA] , With [GUL], Left
		1	U		49			*AL	[DA] , With [GUL], Left
		1	U		74			*E6	[DA] , With [GUL], Left
	1AX471KAAA	1	U		49			*D7	[KA] , With [GUL], Left
		1	U		74			*E6	[KA] , With [GUL], Left
		1	U		74			*AL	[KA] , With [GUL], Left
3	06104579AA	2							SCREW, Tapping, Pull Cup to Door Panel
4	06104336AA	4							SCREW
5	06104336AA	2							SCREW, Pull Cup Bracket to Inner Panel
6									HANDLE, Inside Remote Control
	1BY92DK7AA	1						*AL	[KA], Right
		1						*D7	[KA], Right
	1BY92XDVAA	1						*D7	[DA], Right
		1						*AL	[DA], Right
	1BY93DK7AA	1						*D7	[KA], Left
		1						*AL	[KA], Left
	1BY93XDVAA	1						*AL	[DA], Left
		1						*D7	[DA], Left
7	06104579AA	2							SCREW, Tapping, Inside Door Handle
8									PLUG, Door Trim Panel, Inside Door Handle
	1BH30DK7AA	1	J, T, U		49, 74			*O0	[KA], Right
	1BH30XDVAA	1	J, T, U		49, 74			*O0	[DA], Right
	1BH31DK7AA	1	J, T, U		49, 74			*O0	[KA], Left
	1BH31XDVAA	1	J, T, U		49, 74			*O0	[DA], Left
9									GRILLE, Speaker
	1AW72BDAAA	1	J, T, U		49, 74			*O0	[DA], Right
	1AW72DKAAA	1	J, T, U		49, 74			*O0	[KA], Right
	1AW73DKAAA	1	J, T, U		49, 74			*O0	[KA], Left
	1AW73BDAAA	1	J, T, U		49, 74			*O0	[DA], Left

COMPASS/PATRIOT (MK)

SERIES	LINE	BODY	ENGINE	TRANSMISSION
H = HIGHLINE L = LOWLINE P = PREMIUM	J = JEEP - 4WD T = JEEP - 2WD	49 = HATCHBACK TYPE #2 74 = SPORT UTILITY 4-DR TYPE #4	ED3 = 2.4L 4 Cyl DOHC 16V Dual VVT Engine	DD7 = 5-Speed Manual T355 Transmission DEF = 6-Speed Manual Aisin BG6 Trans DAV = Continuously Variable Transmission DAW = Cont.Var. w/Off-Rd Crawl Ratio Trans

Front Door Trim Panel
Figure IMK-410

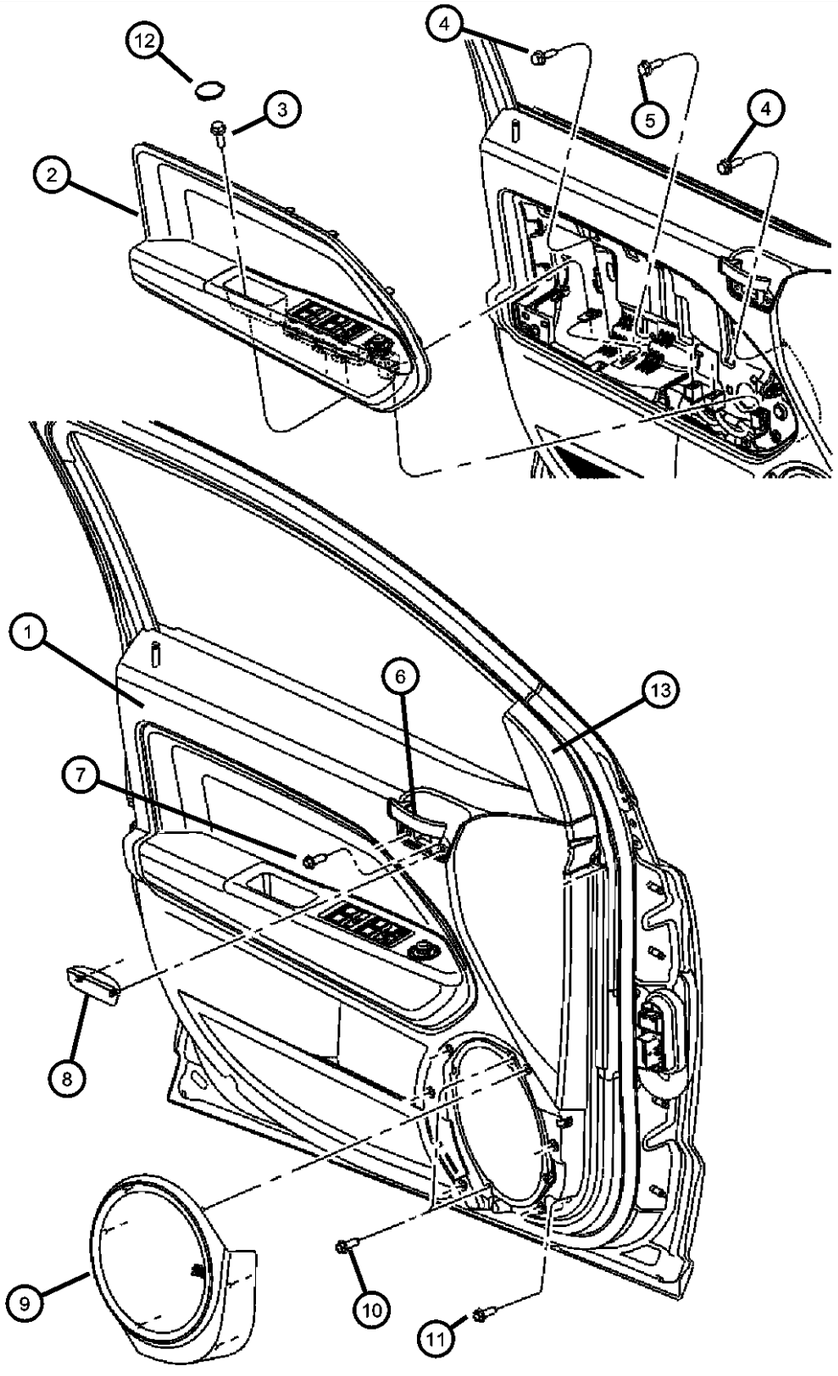

ITEM	PART NUMBER	QTY	LINE	SERIES	BODY	ENGINE	TRANS	TRIM	DESCRIPTION
10	06105189AA	4							SCREW, Speaker to Inner Panel
11	06104336AA	4							SCREW
12									CAP, Pull Cup Screw Cover
	1DD78BDAAA	2	J		49			*O0	[DA]
	1DD78DX9AA	2	J, T, U		49, 74			*O0	[DA]
	1DD78DKAAA	2	J		49			*O0	[KA]
		2	J, T, U		49, 74			*O0	[KA]
13									BEZEL, Power Mirror
	0ZX78DX9AA	1			49			*O0	Right
	0ZX79DX9AA	1			49			*O0	Left
	1CB00DK7AA	1	J, T, U		74			*O0	[KA], Right
	1CB00XDVAA	1	J, T, U		74			*O0	[DA], Right
	1CB01DK7AA	1	J, T, U		74			*O0	[KA], Left
	1CB01XDVAA	1	J, T, U		74			*O0	[DA], Left

COMPASS/PATRIOT (MK)

SERIES	LINE	BODY	ENGINE	TRANSMISSION
H = HIGHLINE L = LOWLINE P = PREMIUM	J = JEEP - 4WD T = JEEP - 2WD	49 = HATCHBACK TYPE #2 74 = SPORT UTILITY 4-DR TYPE #4	ED3 = 2.4L 4 Cyl DOHC 16V Dual VVT Engine	DD7 = 5-Speed Manual T355 Transmission DEF = 6-Speed Manual Aisin BG6 Trans DAV = Continuously Variable Transmission DAW = Cont.Var. w/Off-Rd Crawl Ratio Trans

Rear Door Trim Panel
Figure IMK-420

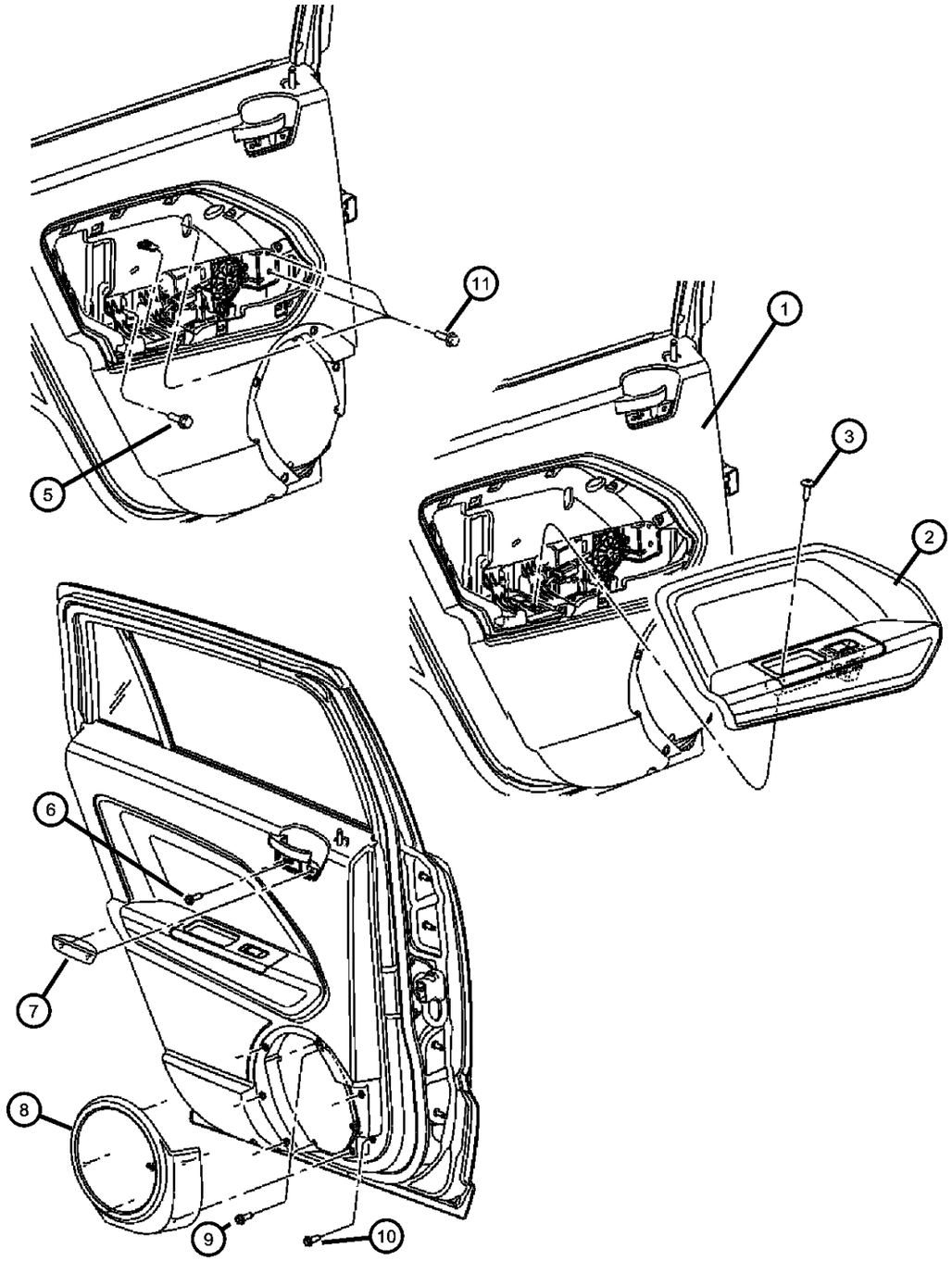

ITEM	PART NUMBER	QTY	LINE	SERIES	BODY	ENGINE	TRANS	TRIM	DESCRIPTION
1									PANEL, Door Trim Rear
	1FK941DAAA	1	J, T		49			*D7	[DA], Right
		1	U		49			*D7	[DA], Right
		1	U		49			*AL	[DA], Right
	1FK941KAAA	1	J, T		49			*D7	[KA], Right
		1	J, T		49			*AL	[DA], Right
	1FK951DAAA	1	J, T		49			*D7	[DA], Left
		1	J, T		49			*AL	[KA], Right
		1	U		49			*D7	[KA], Right
		1	U		49			*AL	[KA], Right
	1FK951KAAA	1	J, T		49			*D7	[KA], Left
		1	J, T		49			*AL	[DA], Left
		1	U		49			*D7	[DA], Left
		1	U		49			*AL	[DA], Left
	1FK961DAAA	1	J, T		74			*D7	[DA], Right
		1	J, T		49			*AL	[KA], Left
		1	U		49			*D7	[KA], Left
		1	U		49			*AL	[KA], Left
		1	U		74			*D7	[DA], Right
		1	U		74			*E6	[DA], Right
		1	U		74			*AL	[DA], Right
		1	J, T		74			*E6	[DA], Right
		1	J, T		74			*AL	[DA], Right
		1	J, T		74			*K6	[DA], Right
		1	J, T		74			*AL	[DA], Right
		1	J, T		74			*K6	[DA], Right
		1	U		74			*K6	[DA], Right
	1FK961KAAA	1	J, T		74			*D7	[KA], Right
		1	J, T		74			*E6	[KA], Right
		1	J, T		74			*AL	[KA], Right
		1	U		74			*D7	[KA], Right
		1	U		74			*E6	[KA], Right
		1	U		74			*AL	[KA], Right
		1	J, T		74			*K6	[KA], Right
	1FK971DAAA	1	J, T		74			*D7	[DA], Left

COMPASS/PATRIOT (MK)

SERIES	LINE	BODY	ENGINE	TRANSMISSION
H = HIGHLINE L = LOWLINE P = PREMIUM	J = JEEP - 4WD T = JEEP - 2WD	49 = HATCHBACK TYPE #2 74 = SPORT UTILITY 4-DR TYPE #4	ED3 = 2.4L 4 Cyl DOHC 16V Dual VVT Engine	DD7 = 5-Speed Manual T355 Transmission DEF = 6-Speed Manual Aisin BG6 Trans DAV = Continuously Variable Transmission DAW = Cont.Var. w/Off-Rd Crawl Ratio Trans

AR = use ase required - = Non illustrrated part

Rear Door Trim Panel
Figure IMK-420

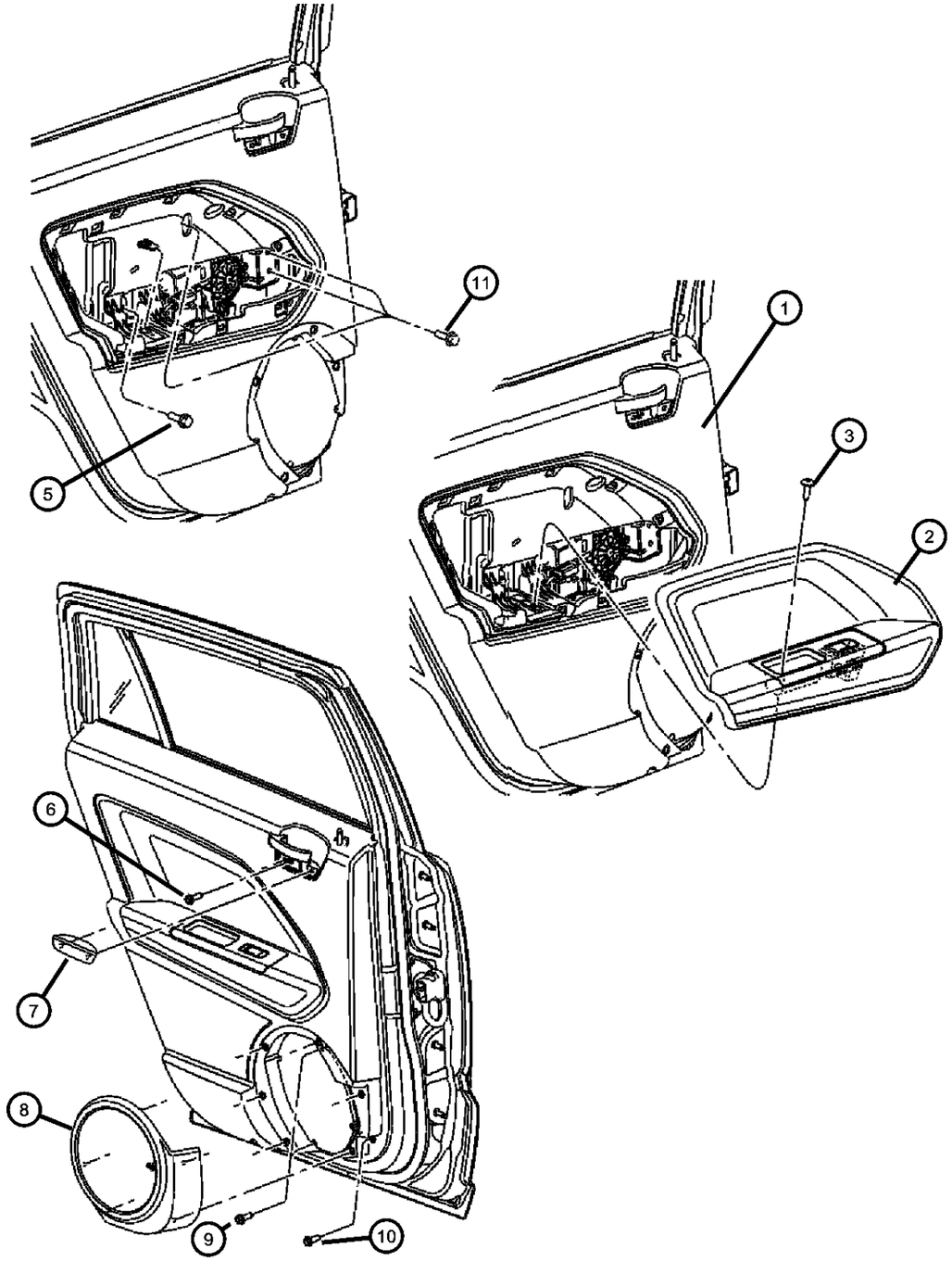

ITEM	PART NUMBER	QTY	LINE	SERIES	BODY	ENGINE	TRANS	TRIM	DESCRIPTION
		1	J, T		74			*E6	[DA], Left
		1	J, T		74			*AL	[DA], Left
		1	U		74			*K6	[KA], Right
		1	U		74			*D7	[DA], Left
		1	U		74			*E6	[DA], Left
		1	U		74			*AL	[DA], Left
	1FK971KAAA	1	J, T		74			*D7	[KA], Left
		1	J, T		74			*K6	[DA], Left
		1	U		74			*K6	[DA], Left
		1	U		74			*D7	[KA], Left
		1	U		74			*E6	[KA], Left
		1	U		74			*AL	[KA], Left
		1	J, T		74			*E6	[KA], Left
		1	J, T		74			*AL	[KA], Left
		1	J, T		74			*K6	[KA], Left
		1	U		74			*K6	[KA], Left
2									BOLSTER, Rear Door
	1AA201DAAA	1	J		49			*D7	[DA] , With [JPD], Right
		1	J		49			*AL	[DA] , With [JPD], Right
		1	U		74			*K6	[DA] , With [JPD], Right
		1	J, T		74			*K6	[DA] , With [JPD]
		1	U		74			*D7	[DA] , With [JPD]
		1	U		74			*AL	[DA] , With [JPD], Right
		1	U		74			*E6	[DA] , With [JPD]
		1	J, T		74			*AL	[DA] , With [JPD]
		1	J, T		74			*E6	[DA] , With [JPD]
		1	J, T		74			*D7	[DA] , With [JPD]
	1AA201KAAA	1	J		49			*D7	[KA] , With [JPD], Right
		1	J		49			*AL	[KA] , With [JPD], Right
		1	U		74			*K6	[KA] , With [JPD], Right
		1	J, T		74			*K6	[KA] , With [JPD], Right
		1	U		74			*AL	[KA] , With [JPD], Right

COMPASS/PATRIOT (MK)

SERIES	LINE	BODY	ENGINE	TRANSMISSION
H = HIGHLINE L = LOWLINE P = PREMIUM	J = JEEP - 4WD T = JEEP - 2WD	49 = HATCHBACK TYPE #2 74 = SPORT UTILITY 4-DR TYPE #4	ED3 = 2.4L 4 Cyl DOHC 16V Dual VVT Engine	DD7 = 5-Speed Manual T355 Transmission DEF = 6-Speed Manual Aisin BG6 Trans DAV = Continuously Variable Transmission DAW = Cont.Var. w/Off-Rd Crawl Ratio Trans

AR = use ase required - = Non illustrrated part

Rear Door Trim Panel
Figure IMK-420

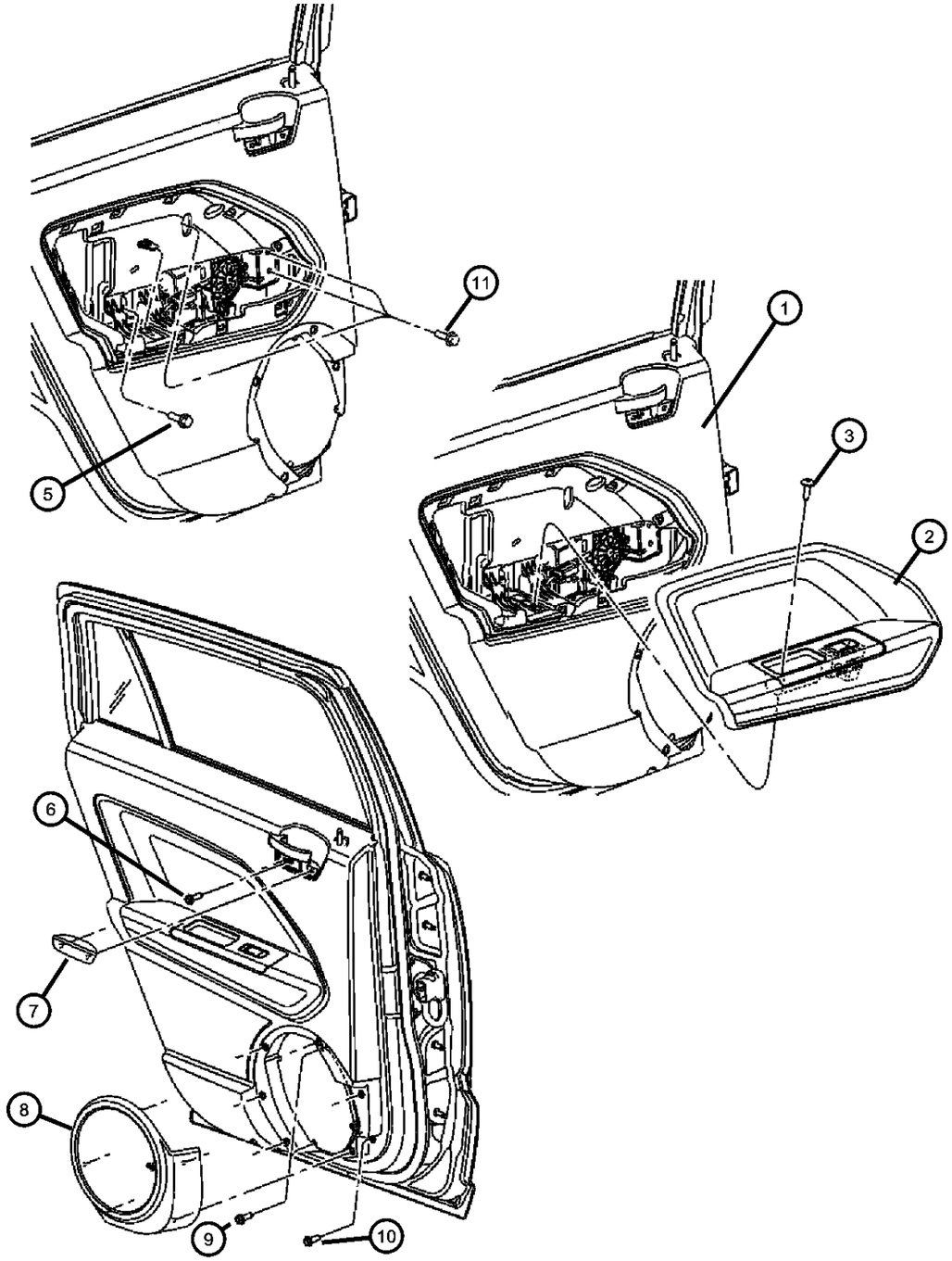

ITEM	PART NUMBER	QTY	LINE	SERIES	BODY	ENGINE	TRANS	TRIM	DESCRIPTION
		1	U		74			*E6	[KA] , With [JPD], Right
		1	U		74			*D7	[KA] , With [JPD], Right
		1	J, T		74			*E6	[KA] , With [JPD], Right
		1	J, T		74			*D7	[KA] , With [JPD], Right
		1	J, T		74			*AL	[KA] , With [JPD], Right
	1AA211DAAA	1	J		49			*D7	[DA] , With [JPD], Left
		1	J		49			*AL	[DA] , With [JPD], Left
		1	U		74			*K6	[DA] , With [JPD], Left
		1	J, T		74			*K6	[DA] , With [JPD], Left
		1	U		74			*AL	[DA] , With [JPD], Left
		1	U		74			*D7	[DA] , With [JPD], Left
		1	J, T		74			*AL	[DA] , With [JPD], Left
		1	J, T		74			*E6	[DA] , With [JPD], Left
		1	J, T		74			*D7	[DA] , With [JPD], Left
		1	U		74			*E6	[DA] , With [JPD], Left
	1AA211KAAA	1	J		49			*D7	[KA] , With [JPD], Left
		1	J		49			*AL	[KA] , With [JPD], Left
		1	J, T		74			*K6	[KA] , With [JPD], Left
		1	U		74			*K6	[KA] , With [JPD], Left
		1	U		74			*D7	[KA] , With [JPD], Left
		1	U		74			*E6	[KA] , With [JPD], Left
		1	U		74			*AL	[KA] , With [JPD], Left
		1	J, T		74			*D7	[KA] , With [JPD], Left
		1	J, T		74			*AL	[KA] , With [JPD], Left
		1	J, T		74			*E6	[KA] , With [JPD], Left
	1AA24BDAAA	1	J, T		74			*D7	[DA] , With [JF8], Right
		1	J, T		74			*AL	[DA] , With [JF8], Right
		1	J		49			*D7	[DA] , With [JF8], Right
		1	J		49			*AL	[DA] , With [JF8], Right
		1	J, T		74			*E6	[DA] , With [JF8], Right
		1	J, T		74			*K6	[DA] , With [JF8], Right
	1AA24DKAAA	1	J		49			*D7	[KA] , With [JF8], Right

COMPASS/PATRIOT (MK)

SERIES	LINE	BODY	ENGINE	TRANSMISSION
H = HIGHLINE L = LOWLINE P = PREMIUM	J = JEEP - 4WD T = JEEP - 2WD	49 = HATCHBACK TYPE #2 74 = SPORT UTILITY 4-DR TYPE #4	ED3 = 2.4L 4 Cyl DOHC 16V Dual VVT Engine	DD7 = 5-Speed Manual T355 Transmission DEF = 6-Speed Manual Aisin BG6 Trans DAV = Continuously Variable Transmission DAW = Cont.Var. w/Off-Rd Crawl Ratio Trans

AR = use ase required - = Non illustrrated part

Rear Door Trim Panel
Figure IMK-420

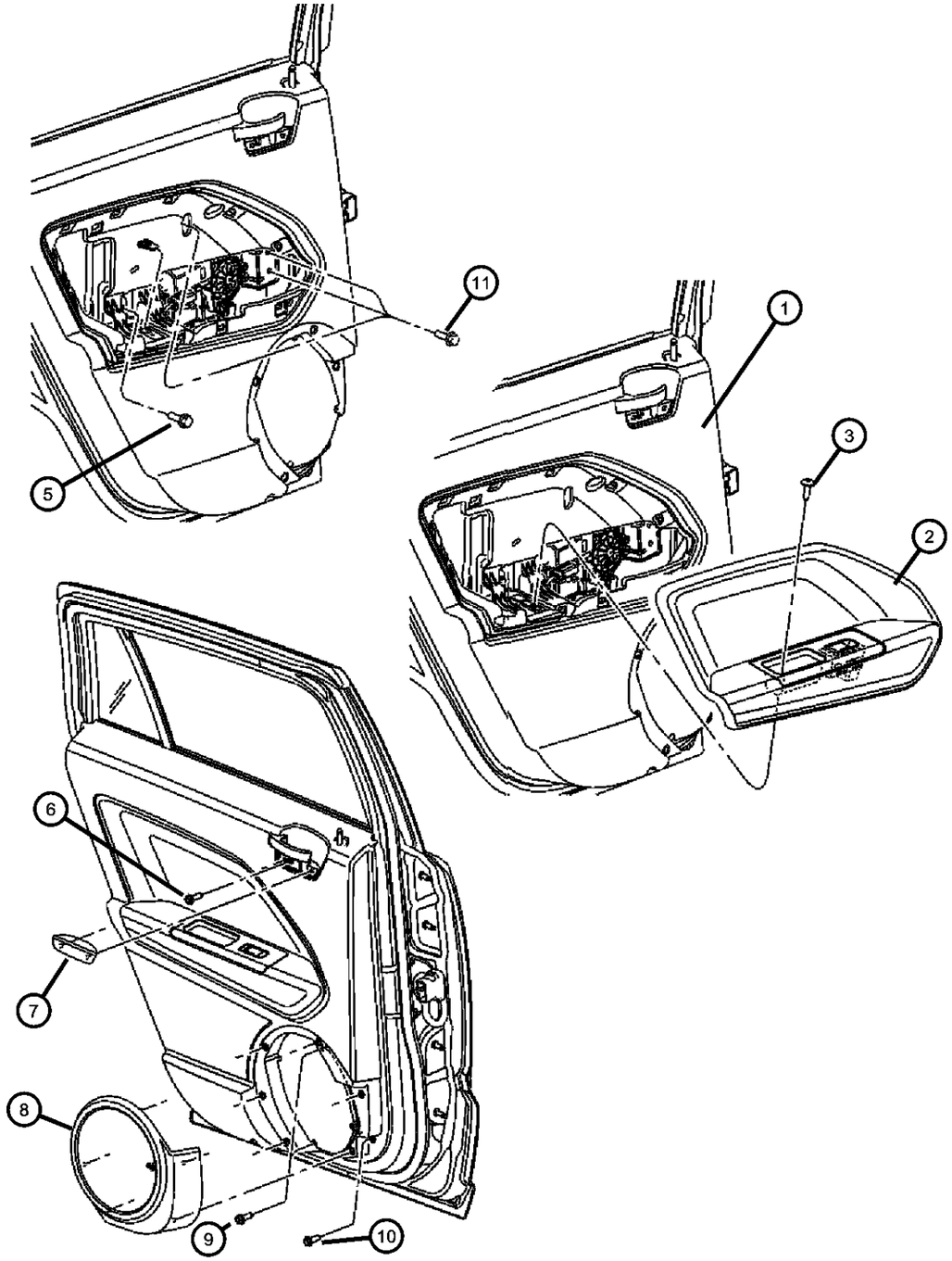

ITEM	PART NUMBER	QTY	LINE	SERIES	BODY	ENGINE	TRANS	TRIM	DESCRIPTION
		1	J		49			*AL	[KA] , With [JF8], Right
		1	J, T		74			*D7	[KA] , With [JF8], Right
		1	J, T		74			*AL	[KA] , With [JF8], Right
		1	J, T		74			*E6	[KA] , With [JF8], Right
		1	J, T		74			*K6	[KA] , With [JF8], Right
	1AA25BDAAA	1	J		49			*D7	[DA] , With [JF8], Left
		1	J		49			*AL	[DA] , With [JF8], Left
		1	J, T		74			*E6	[DA] , With [JF8], Left
		1	J, T		74			*D7	[DA] , With [JF8], Left
		1	J, T		74			*K6	[DA] , With [JF8], Left
		1	J, T		74			*AL	[DA] , With [JF8], Left
	1AA25DKAAA	1	J		49			*D7	[KA] , With [JF8], Left
		1	J		49			*AL	[KA] , With [JF8], Left
		1	J, T		74			*D7	[KA] , With [JF8], Left
		1	J, T		74			*AL	[KA] , With [JF8], Left
		1	J, T		74			*E6	[KA] , With [JF8], Left
		1	J, T		74			*K6	[KA] , With [JF8], Left
3	06104579AA	2							SCREW, Tapping, Pull Cup to Door Trim Panel
-4									CAP, Pull Cup Screw Cover
	1DD78BDAAA	2	J, T, U		49, 74			*O0	[DA]
	1DD78DKAAA	2	J, T, U		49, 74			*O0	[KA]
5	06104366AA	2	J, T, U		49, 74				SCREW AND WASHER, Hex Head, M6x1x20, Pull Cup Bracket to Inner Panel
6	06104579AA	2							SCREW, Tapping, Handle to Sheet Metal
7									PLUG, Door Trim Panel, Inside Handle
	1BH30DK7AA	1	J, T, U		49, 74			*O0	[KA], Right
	1BH30XDVAA	1	J, T, U		49, 74			*O0	[DA], Right
	1BH31DK7AA	1	J, T, U		49, 74			*O0	[KA], Left
	1BH31XDVAA	1	J, T, U		49, 74			*O0	[DA], Left
8									GRILLE, Speaker
	1AW74DKAAA	1	J, T, U		49, 74			*O0	[KA], Right

COMPASS/PATRIOT (MK)

SERIES	LINE	BODY	ENGINE	TRANSMISSION
H = HIGHLINE L = LOWLINE P = PREMIUM	J = JEEP - 4WD T = JEEP - 2WD	49 = HATCHBACK TYPE #2 74 = SPORT UTILITY 4-DR TYPE #4	ED3 = 2.4L 4 Cyl DOHC 16V Dual VVT Engine	DD7 = 5-Speed Manual T355 Transmission DEF = 6-Speed Manual Aisin BG6 Trans DAV = Continuously Variable Transmission DAW = Cont.Var. w/Off-Rd Crawl Ratio Trans

AR = use ase required - = Non illustrrated part

Rear Door Trim Panel
Figure IMK-420

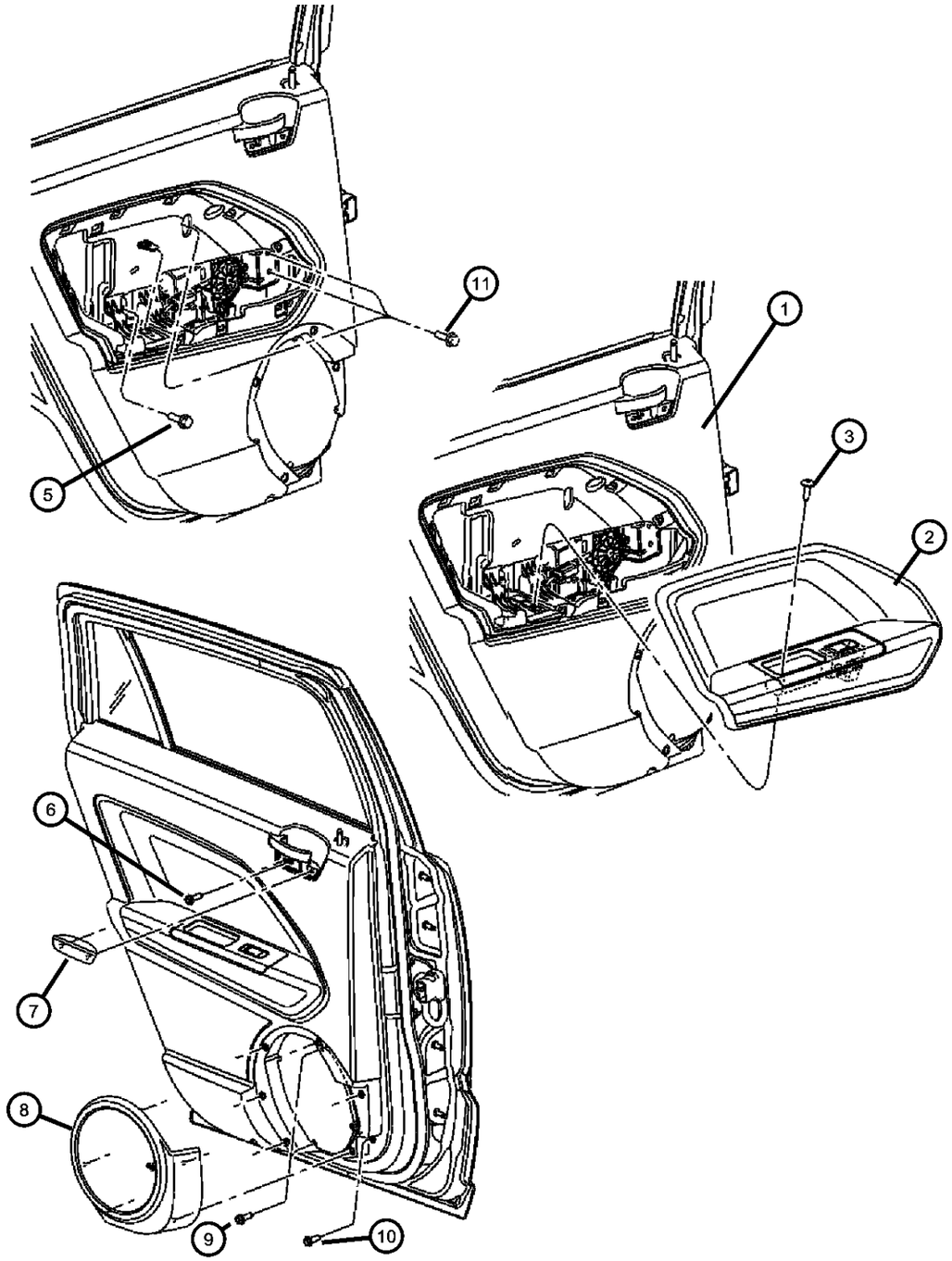

ITEM	PART NUMBER	QTY	LINE	SERIES	BODY	ENGINE	TRANS	TRIM	DESCRIPTION
	1AW74BDAAA	1	J, T, U		49, 74			*O0	[DA], Right
	1AW75BDAAA	1	J, T, U		49, 74			*O0	[DA], Left
	1AW75DKAAA	1	J, T, U		49, 74			*O0	[KA], Left
9	06105189AA	4							SCREW, Speaker Grille
10	06104336AA	2							SCREW
11	06104336AA	2							SCREW

COMPASS/PATRIOT (MK)

SERIES	LINE	BODY	ENGINE	TRANSMISSION
H = HIGHLINE L = LOWLINE P = PREMIUM	J = JEEP - 4WD T = JEEP - 2WD	49 = HATCHBACK TYPE #2 74 = SPORT UTILITY 4-DR TYPE #4	ED3 = 2.4L 4 Cyl DOHC 16V Dual VVT Engine	DD7 = 5-Speed Manual T355 Transmission DEF = 6-Speed Manual Aisin BG6 Trans DAV = Continuously Variable Transmission DAW = Cont.Var. w/Off-Rd Crawl Ratio Trans

AR = use ase required - = Non illustrrated part

Front Seats - Trim Code [AL]
Figure IMK-510

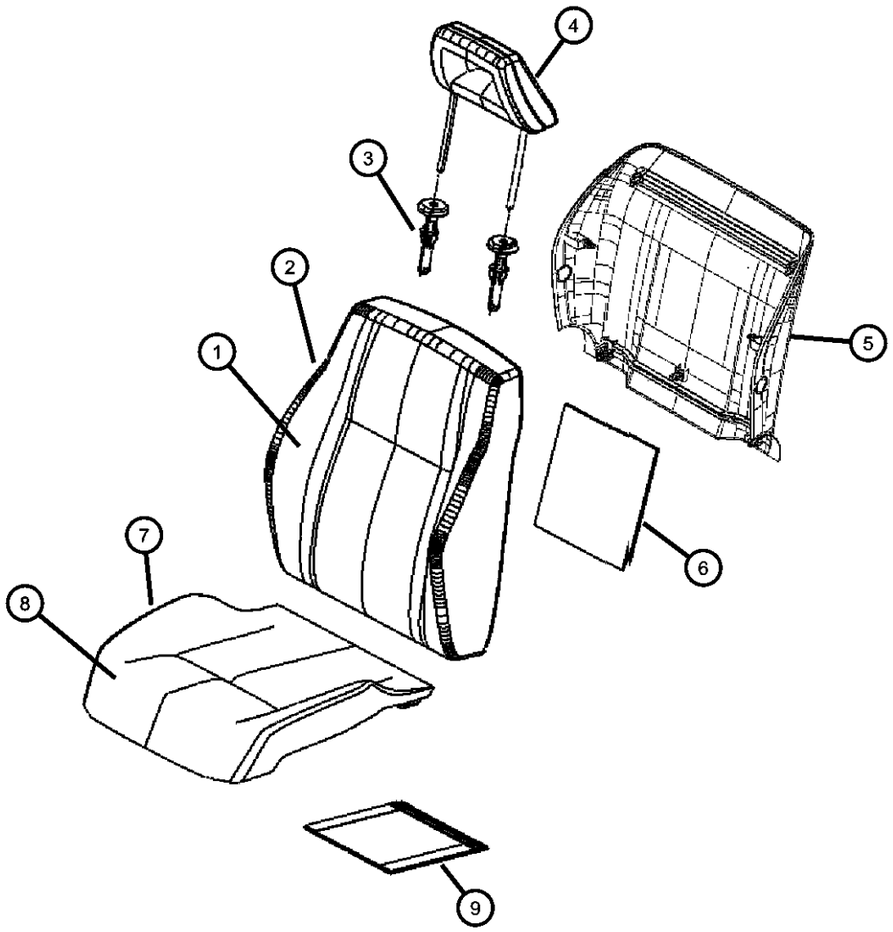

ITEM	PART NUMBER	QTY	LINE	SERIES	BODY	ENGINE	TRANS	TRIM	DESCRIPTION
1									COVER, Front Seat Back
	1FA301DAAA	1	J, T		49, 74			*AL	[DA], Right
		1	U		49, 74			*AL	[DA], Right
	1FA301KAAA	1	J, T		74, 49			*AL	[KA], Right
		1	U		49, 74			*AL	[KA], Right
	1FA311DAAA	1	J, T		49, 74			*AL	[DA], Left
		1	U		49, 74			*AL	[DA], Left
	1FA311KAAA	1	J, T		49, 74			*AL	[KA], Left
		1	U		49, 74			*AL	[KA], Left
2									FOAM, Seat Back
	68001645AA	1	U		49, 74			*AL	Left
		1	J, T		49, 74			*AL	Left
	68001646AA	1	U		49, 74			*AL	Right
		1	J, T		49, 74			*AL	Right
3									SLEEVE, Headrest
	1DS911DAAA	2	J, T		49, 74			*AL	[DA], Locking
		5	U		49, 74			*AL	[DA], Locking
	1DS911KAAA	2	J, T		49, 74			*AL	[KA], Locking
		5	U		49, 74			*AL	[KA], Locking
	1DS941DAAA	2	J, T		49, 74			*AL	[DA], Slave Cylinder
		5	U		49, 74			*AL	[DA], Slave Cylinder
	1DS941KAAA	2	J, T		49, 74			*AL	[KA], Slave Cylinder
		5	U		49, 74			*AL	[KA], Slave Cylinder
4									HEADREST
	1DQ211DAAA	2	J, T		49, 74			*AL	[DA]
		2	U		49, 74			*AL	[DA]
	1DQ211KAAA	2	J, T		49, 74			*AL	[KA]
		2	U		49, 74			*AL	[KA]
5									PANEL, Front Seat Back
	1DQ231DAAA	1	J, T		49, 74			*AL	[DA]
		1	U		49, 74			*AL	[DA]
	1DQ251DAAA	1	J, T		49, 74			*AL	[DA] , Fold Flat
		1	U		49, 74			*AL	[DA] , Fold Flat

COMPASS/PATRIOT (MK)

SERIES	LINE	BODY	ENGINE	TRANSMISSION
H = HIGHLINE L = LOWLINE P = PREMIUM	J = JEEP - 4WD T = JEEP - 2WD	49 = HATCHBACK TYPE #2 74 = SPORT UTILITY 4-DR TYPE #4	ED3 = 2.4L 4 Cyl DOHC 16V Dual VVT Engine	DD7 = 5-Speed Manual T355 Transmission DEF = 6-Speed Manual Aisin BG6 Trans DAV = Continuously Variable Transmission DAW = Cont.Var. w/Off-Rd Crawl Ratio Trans

AR = use ase required - = Non illustrrated part

Front Seats - Trim Code [AL]
Figure IMK-510

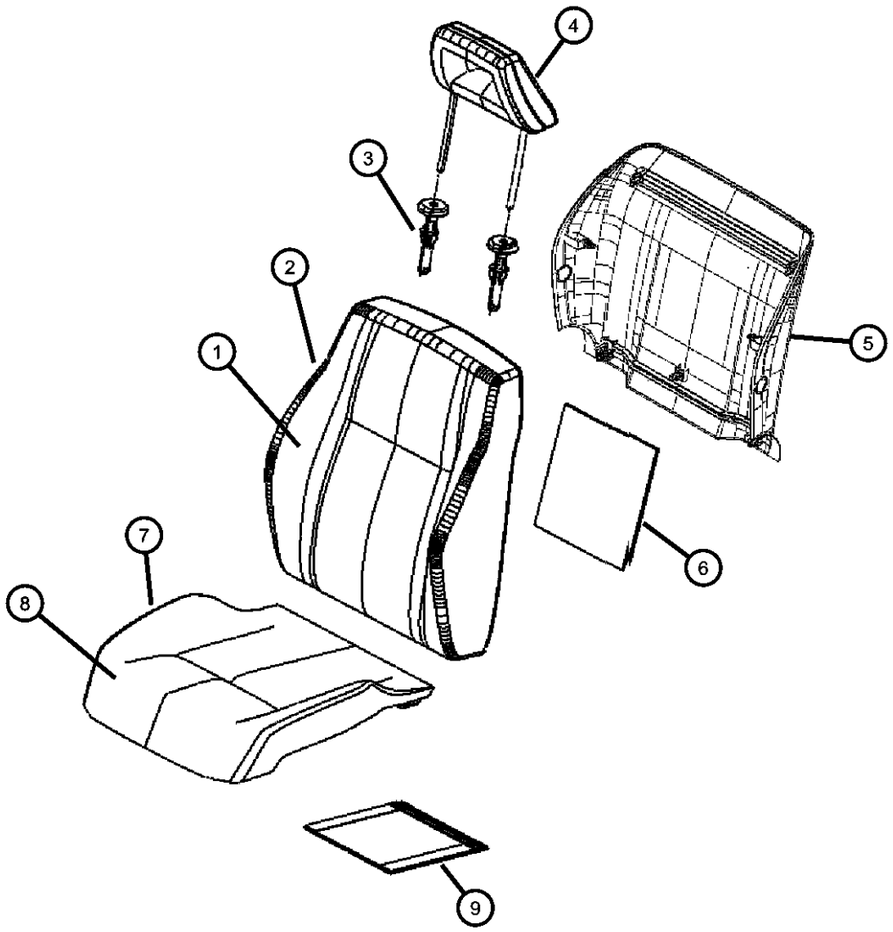

ITEM	PART NUMBER	QTY	LINE	SERIES	BODY	ENGINE	TRANS	TRIM	DESCRIPTION
	1DQ231KAAA	1	J, T		49, 74			*AL	[KA]
		1	U		49, 74			*AL	[KA]
	1DQ251KAAA	1	J, T		74, 49			*AL	[KA] , Fold Flat
		1	U		49, 74			*AL	[KA] , Fold Flat
6									PAD, Heater, Back
	05183316AA	1	J, T		49, 74			*AL	Driver
		1	U		49, 74			*AL	Driver
	05183317AA	1	J, T		49, 74			*AL	Passenger
		1	U		49, 74			*AL	Passenger
7									FOAM, Seat Cushion
	68001647AA	2	U		49, 74			*AL	Right & Left
		2	J, T		49, 74			*AL	Right & Left
8									COVER, Front Seat Cushion
	1EX231DAAA	2	J, T		49, 74			*AL	[DA]
		2	U		49, 74			*AL	[DA]
	1EX231KAAA	2	U		49, 74			*AL	[KA]
		2	J, T		49, 74			*AL	[KA]
9									PAD, Heater, Cushion
	05183318AA	2	U		49, 74			*AL	
		2	J, T		49, 74			*AL	

COMPASS/PATRIOT (MK)

SERIES	LINE	BODY	ENGINE	TRANSMISSION
H = HIGHLINE L = LOWLINE P = PREMIUM	J = JEEP - 4WD T = JEEP - 2WD	49 = HATCHBACK TYPE #2 74 = SPORT UTILITY 4-DR TYPE #4	ED3 = 2.4L 4 Cyl DOHC 16V Dual VVT Engine	DD7 = 5-Speed Manual T355 Transmission DEF = 6-Speed Manual Aisin BG6 Trans DAV = Continuously Variable Transmission DAW = Cont.Var. w/Off-Rd Crawl Ratio Trans

Front Seats - Trim Code [D7]
Figure IMK-520

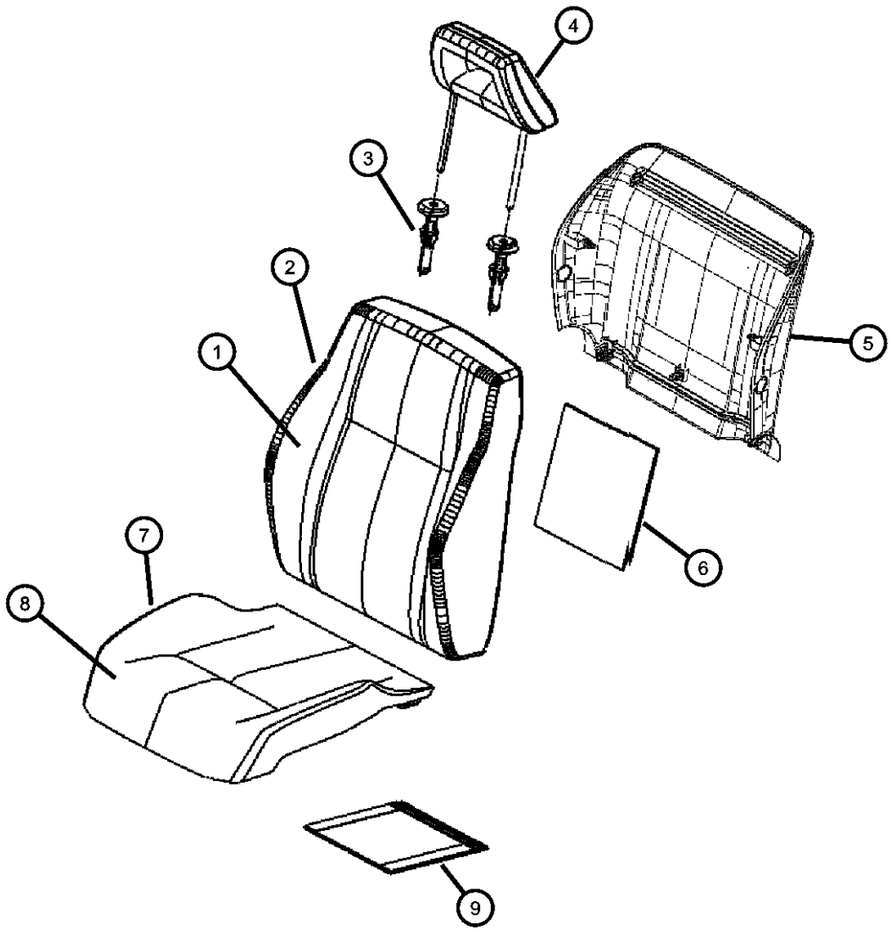

ITEM	PART NUMBER	QTY	LINE	SERIES	BODY	ENGINE	TRANS	TRIM	DESCRIPTION
1									COVER, Front Seat Back
	1EX001D5AA	2	J, T		49, 74			*D7	[DA]
		2	U		49, 74			*D7	[DA]
	1EX001K2AA	2	J, T		49, 74			*D7	[KA]
		2	U		49, 74			*D7	[KA]
2									FOAM, Seat Back
	68001645AA	1	J, T		49, 74			*D7	Left
		1	U		49, 74			*D7	Left
	68001646AA	1	J, T		49, 74			*D7	Right
		1	U		49, 74			*D7	Right
3									SLEEVE, Headrest
	1DS911DAAA	2	J, T		49, 74			*D7	[DA], Locking
		5	U		49, 74			*D7	[DA], Locking
	1DS911KAAA	3	U		49, 74			*D7	[KA], Locking
		2	J, T		49, 74			*D7	[KA], Locking
	1DS941DAAA	2	J, T		49, 74			*D7	[DA], Slave Cylinder
		3	U		49, 74			*D7	[DA], Slave Cylinder
	1DS941KAAA	2	J, T		49, 74			*D7	[KA], Slave Cylinder
		5	U		49, 74			*D7	[KA], Slave Cylinder
4									HEADREST
	1DQ211DAAA	2	J, T		49, 74			*D7	[DA]
		2	U		49, 74			*D7	[DA]
	1DQ211KAAA	2	J, T		49, 74			*D7	[KA]
		2	U		49, 74			*D7	[KA]
5									PANEL, Front Seat Back
	1DQ231DAAA	1	J, T		49, 74			*D7	[DA]
		1	U		49, 74			*D7	[DA]
	1DQ231KAAA	1	J, T		49, 74			*D7	[KA]
		1	U		49, 74			*D7	[KA]
	1DQ251DAAA	1	J, T		49, 74			*D7	[DA] , Fold Flat
	1DQ251KAAA	1	J, T		49, 74			*D7	[KA] , Fold Flat
		1	U		49, 74			*D7	[DA] , Fold Flat
		1	U		49, 74			*D7	[KA] , Fold Flat

COMPASS/PATRIOT (MK)

SERIES	LINE	BODY	ENGINE	TRANSMISSION
H = HIGHLINE L = LOWLINE P = PREMIUM	J = JEEP - 4WD T = JEEP - 2WD	49 = HATCHBACK TYPE #2 74 = SPORT UTILITY 4-DR TYPE #4	ED3 = 2.4L 4 Cyl DOHC 16V Dual VVT Engine	DD7 = 5-Speed Manual T355 Transmission DEF = 6-Speed Manual Aisin BG6 Trans DAV = Continuously Variable Transmission DAW = Cont.Var. w/Off-Rd Crawl Ratio Trans

Front Seats - Trim Code [D7]
Figure IMK-520

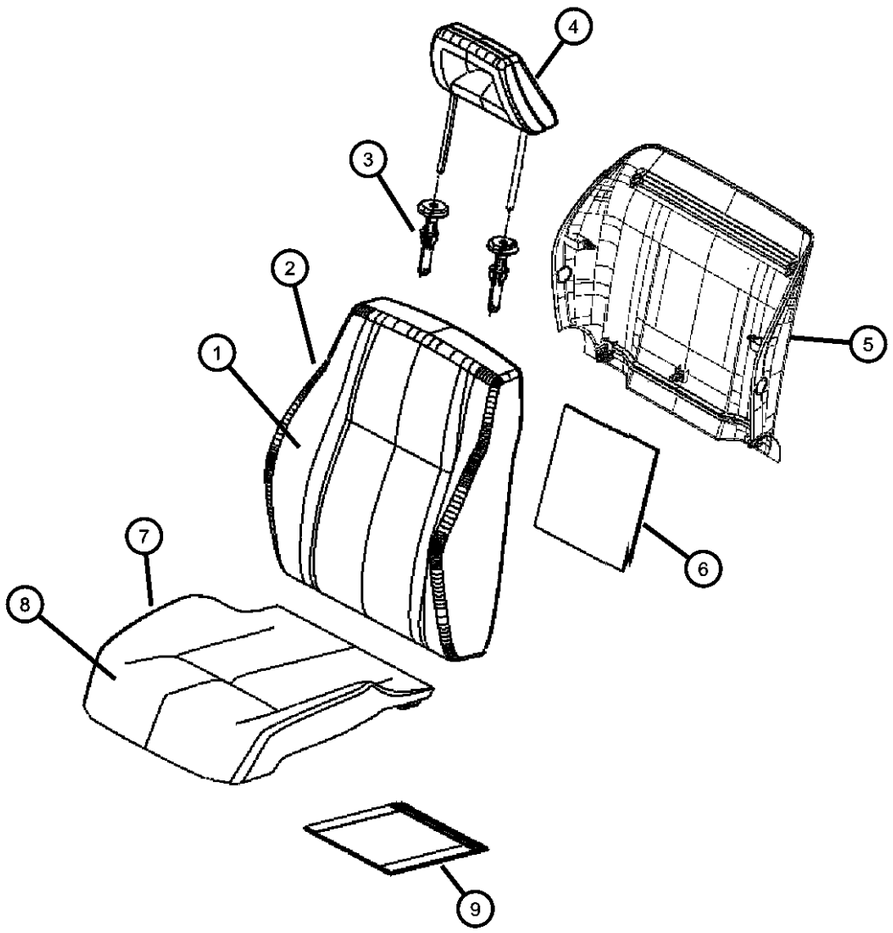

ITEM	PART NUMBER	QTY	LINE	SERIES	BODY	ENGINE	TRANS	TRIM	DESCRIPTION
6									PAD, Heater, Back
	05183316AA	1	U		49, 74			*D7	Driver
		1	J, T		49, 74			*D7	Driver
	05183317AA	1	J, T		49, 74			*D7	Passenger
		1	U		49, 74			*D7	Passenger
7									FOAM, Seat Cushion
	68001647AA	2	J, T		49, 74			*D7	Right & Left
		2	U		49, 74			*D7	Right & Left
8									COVER, Front Seat Cushion
	1EX191D5AA	2	J, T		49, 74			*D7	[DA]
		2	U		49, 74			*D7	[DA]
	1EX191K2AA	2	J, T		49, 74			*D7	[KA]
		2	U		49, 74			*D7	[KA]
9									PAD, Heater, Cushion
	05183318AA	2	J, T		49, 74			*D7	
		2	U		49, 74			*D7	

COMPASS/PATRIOT (MK)

SERIES	LINE	BODY	ENGINE	TRANSMISSION
H = HIGHLINE L = LOWLINE P = PREMIUM	J = JEEP - 4WD T = JEEP - 2WD	49 = HATCHBACK TYPE #2 74 = SPORT UTILITY 4-DR TYPE #4	ED3 = 2.4L 4 Cyl DOHC 16V Dual VVT Engine	DD7 = 5-Speed Manual T355 Transmission DEF = 6-Speed Manual Aisin BG6 Trans DAV = Continuously Variable Transmission DAW = Cont.Var. w/Off-Rd Crawl Ratio Trans

Front Seats - Trim Code [E6]
Figure IMK-530

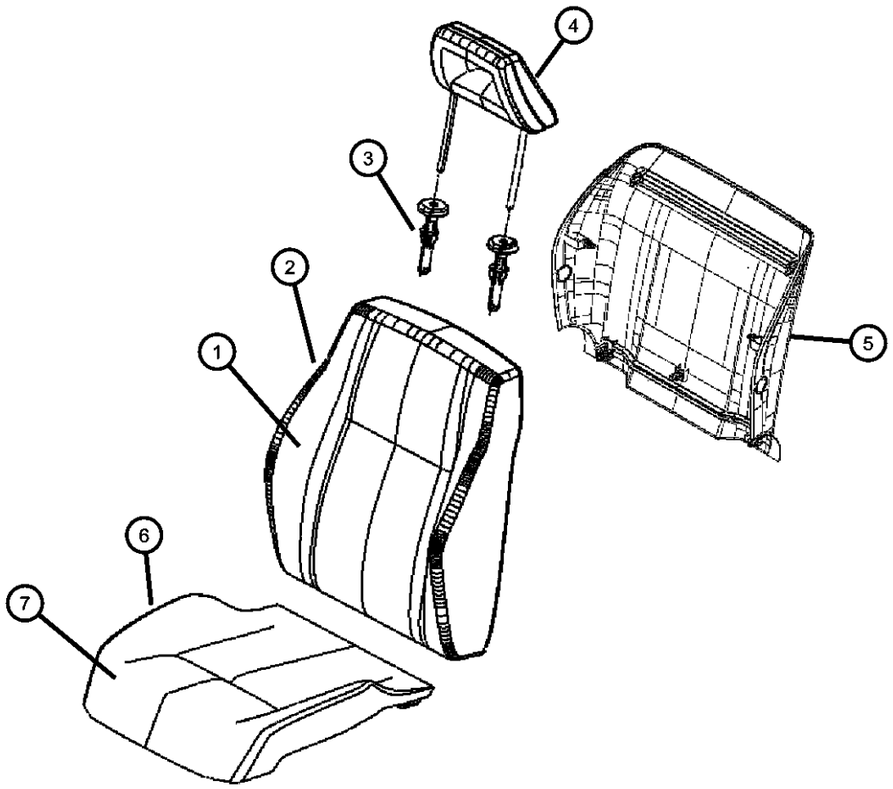

ITEM	PART NUMBER	QTY	LINE	SERIES	BODY	ENGINE	TRANS	TRIM	DESCRIPTION
1									COVER, Front Seat Back
	1EX211DAAA	2	J, T		49, 74			*E6	[DA]
		2	U		49, 74			*E6	[DA]
	1EX211KAAA	2	J, T		49, 74			*E6	[KA]
		2	U		49, 74			*E6	[KA]
2									FOAM, Seat Back
	68001645AA	1	U		49, 74			*E6	Left
	68001646AA	1	J, T		49, 74			*E6	Right
		1	U		49, 74			*E6	Right
		2	J, T		49, 74			*E6	Left
3									SLEEVE, Headrest
	1DS911KAAA	2	J, T		49, 74			*E6	[KA], Locking
		5	U		49, 74			*E6	[KA], Locking
	1DS941DAAA	2	J, T		49, 74			*E6	[DA], Slave Cylinder
	1DS911DAAA	2	J, T		49, 74			*E6	[DA], Locking
		5	U		49, 74			*E6	[DA], Locking
	1DS941KAAA	5	U		49, 74			*E6	[KA], Slave Cylinder
		5	U		49, 74			*E6	[DA], Slave Cylinder
		2	J, T		49, 74			*E6	[KA], Slave Cylinder
4									HEADREST
	1DQ211DAAA	2	J, T		49, 74			*E6	[DA]
		2	U		49, 74			*E6	[DA]
	1DQ211KAAA	2	J, T		49, 74			*E6	[KA]
		2	U		49, 74			*E6	[KA]
5									PANEL, Front Seat Back
	1DQ231DAAA	2	J, T		49, 74			*E6	[DA]
		2	U		49, 74			*E6	[DA]
	1DQ251DAAA	1	U		49, 74			*E6	[DA] , Fold Flat
	1DQ251KAAA	1	J, T		49, 74			*E6	[KA] , Fold Flat
		1	U		49, 74			*E6	[KA] , Fold Flat
	1DQ231KAAA	2	J, T		49, 74			*E6	[KA]
		2	U		49, 74			*E6	[KA]
		1	J, T		49, 74			*E6	[DA] , Fold Flat

COMPASS/PATRIOT (MK)

SERIES	LINE	BODY	ENGINE	TRANSMISSION
H = HIGHLINE L = LOWLINE P = PREMIUM	J = JEEP - 4WD T = JEEP - 2WD	49 = HATCHBACK TYPE #2 74 = SPORT UTILITY 4-DR TYPE #4	ED3 = 2.4L 4 Cyl DOHC 16V Dual VVT Engine	DD7 = 5-Speed Manual T355 Transmission DEF = 6-Speed Manual Aisin BG6 Trans DAV = Continuously Variable Transmission DAW = Cont.Var. w/Off-Rd Crawl Ratio Trans

Front Seats - Trim Code [E6]
Figure IMK-530

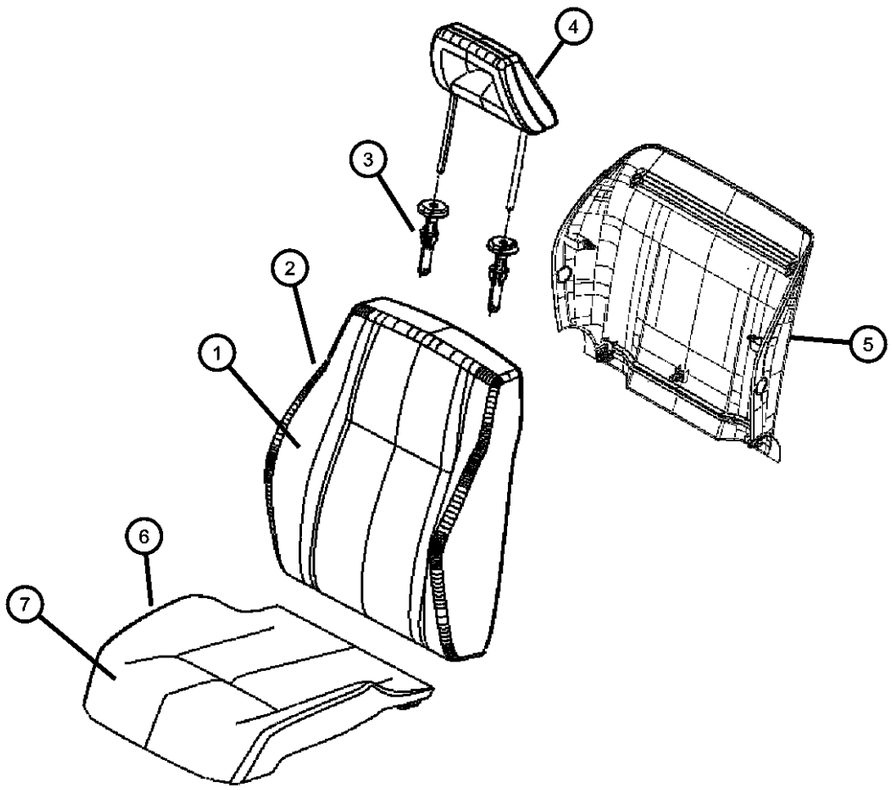

ITEM	PART NUMBER	QTY	LINE	SERIES	BODY	ENGINE	TRANS	TRIM	DESCRIPTION
6									FOAM, Seat Cushion
	68001647AA	2	J, T		49, 74			*E6	Right & Left
		2	U		49, 74			*E6	Right & Left
7									COVER, Front Seat Cushion
	1EX241DAAA	2	U		49, 74			*E6	[DA]
		2	J, T		49, 74			*E6	[DA]
	1EX241KAAA	2	J, T		49, 74			*E6	[KA]
		2	U		49, 74			*E6	[KA]

COMPASS/PATRIOT (MK)

SERIES	LINE	BODY	ENGINE	TRANSMISSION
H = HIGHLINE L = LOWLINE P = PREMIUM	J = JEEP - 4WD T = JEEP - 2WD	49 = HATCHBACK TYPE #2 74 = SPORT UTILITY 4-DR TYPE #4	ED3 = 2.4L 4 Cyl DOHC 16V Dual VVT Engine	DD7 = 5-Speed Manual T355 Transmission DEF = 6-Speed Manual Aisin BG6 Trans DAV = Continuously Variable Transmission DAW = Cont.Var. w/Off-Rd Crawl Ratio Trans

Front Seat - Trim Code [K6]
Figure IMK-540

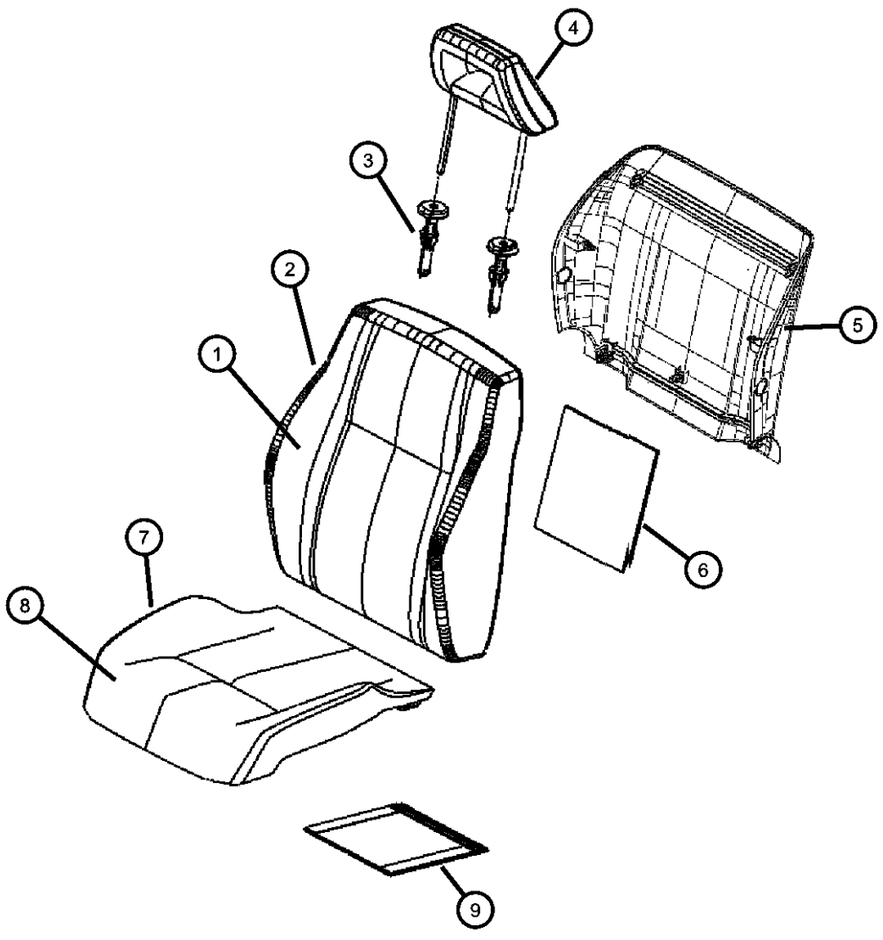

ITEM	PART NUMBER	QTY	LINE	SERIES	BODY	ENGINE	TRANS	TRIM	DESCRIPTION
1									COVER, Front Seat Back
	1HK191D5AA	2	J, T		74			*K6	[DA], Driver
		2	J, T		49			*K6	[DA], Driver
		2	J, T		49, 74			*K6	[DA], Driver
		1	J, T		49			*K6	[DA] , Export, Driver
		1	J, T		74			*K6	[DA] , Export, Driver
	1HK191K2AA	2	J, T		74			*K6	[KA], Driver
		2	J, T		49			*K6	[KA], Driver
		2	J, T		49, 74			*K6	[KA], Driver
		1	J, T		49			*K6	[KA] . Export, Driver
		1	J, T		74			*K6	[KA] . Export, Driver
	1HM151D5AA	1	U		49, 74			*K6	[DA] , Without [CJ1], Left
	1HR721D5AA	1	U		49, 74			*K6	[DA] , Without [CJ1], Right
	1HS641D5AA	1	J, T		49			*K6	[DA] , With [XCA], Right
		1	J, T		49			*K6	[DA] , Mexico , With [AGV] [CDH] [CJ1], Right
		1	J, T		74			*K6	[DA] , Mexico , With [AGV] [CDH] [CJ1], Right
		1	J, T		49			*K6	[DA] , Export, Right
	1HS651D5AA	1	J, T		49			*K6	[DA] , With [XCA], Left
		1	J, T		49			*K6	[DA] , Mexico , With [AGV] [CDH] [CJ1], Left
		1	J, T		74			*K6	[DA] , Mexico , With [AGV] [CDH] [CJ1], Left
		1	J, T		49			*K6	[DA] , Export, Left
	1HS661D5AA	1	J, T		49			*K6	[DA] , Export , With [CMA], Right
		1	J, T		74			*K6	[DA] , Export , With [CMA], Right
	1HS661K2AA	1	J, T		49			*K6	[KA] , Export , With [CMA], Right
	1HS671K2AA	1	J, T		49			*K6	[KA] , Export , With [CMA], Left
		1	J, T		74			*K6	[KA] , Export , With [CMA], Left
	1HT541D5AA	1	J, T		49			*K6	[DA] , Mexico, Right
		1	J, T		74			*K6	[DA] , Mexico, Right
		1	J, T		74			*K6	[KA] , Export , With [CMA], Right
	1HS671D5AA	1	J, T		49			*K6	[DA] , Export , With [CMA]
		1	J, T		74			*K6	[DA] , Export , With [CMA]

COMPASS/PATRIOT (MK)

SERIES	LINE	BODY	ENGINE	TRANSMISSION
H = HIGHLINE L = LOWLINE P = PREMIUM	J = JEEP - 4WD T = JEEP - 2WD	49 = HATCHBACK TYPE #2 74 = SPORT UTILITY 4-DR TYPE #4	ED3 = 2.4L 4 Cyl DOHC 16V Dual VVT Engine	DD7 = 5-Speed Manual T355 Transmission DEF = 6-Speed Manual Aisin BG6 Trans DAV = Continuously Variable Transmission DAW = Cont.Var. w/Off-Rd Crawl Ratio Trans

AR = use ase required - = Non illustrrated part

Front Seat - Trim Code [K6]
Figure IMK-540

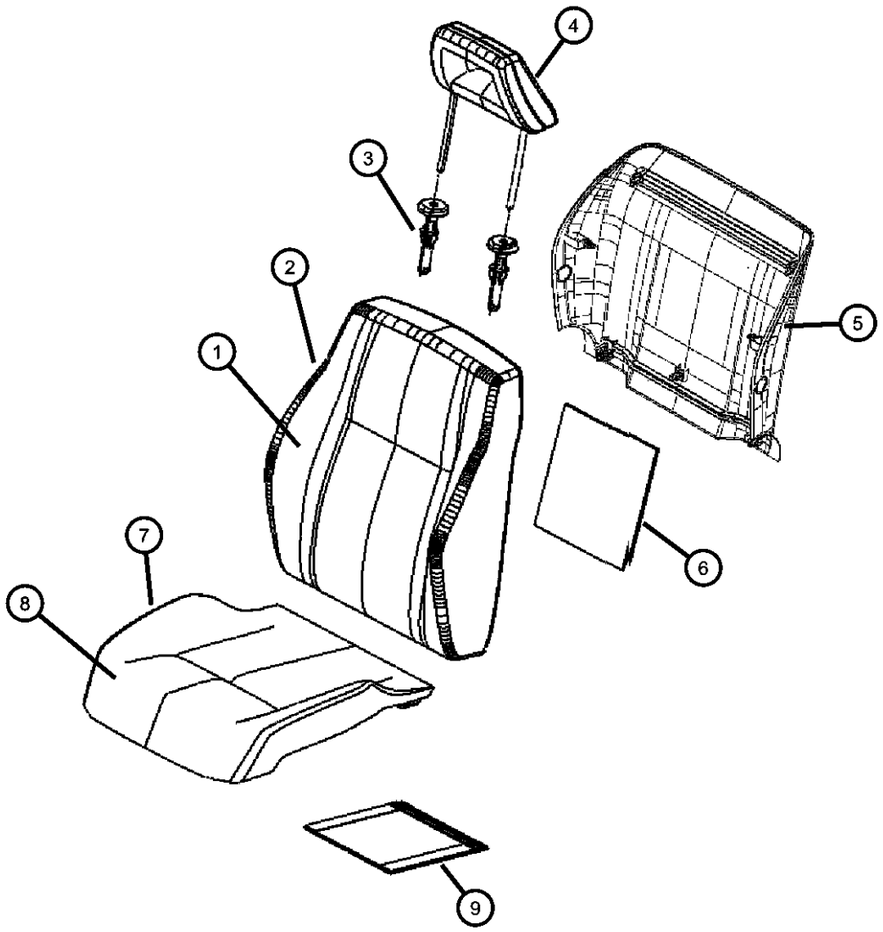

ITEM	PART NUMBER	QTY	LINE	SERIES	BODY	ENGINE	TRANS	TRIM	DESCRIPTION
	1HT551D5AA	1	U		49, 74			*K6	[DA], Left
	1HT551K2AA	1	U		49, 74			*K6	[KA], Left
	1HT561D5AA	1	U		49, 74			*K6	[DA], Right
	1HT561K2AA	1	U		49, 74			*K6	[KA], Right
2									FOAM, Seat Back
	68001645AA	2	J, T		49			*K6	Left
		1	J, T		74			*K6	Left
	68001646AA	1	J, T		49			*K6	Right
		1	J, T		74			*K6	Right
3									SLEEVE, Headrest
	1DS911DAAA	1	J, T		74			*K6	[DA], Locking
		1	T, J		49			*K6	[DA], Locking
	1DS911KAAA	1	J, T		74			*K6	[KA], Locking
		1	J, T		49			*K6	[KA], Locking
	1DS941DAAA	1	J, T		74			*K6	[DA], Slave Cylinder
		1	J, T		49			*K6	[DA], Slave Cylinder
	1DS941KAAA	1	J, T		74			*K6	[KA], Slave Cylinder
		1	J, T		49			*K6	[KA], Slave Cylinder
4									HEADREST
	1DQ211DAAA	1	J, T		49			*K6	[DA]
		1	J, T		74			*K6	[DA]
	1DQ211KAAA	1	J, T		74			*K6	[KA]
		1	J, T		49			*K6	[KA]
5	05183352AA	1	T, J		74			*K6	PANEL, Seat Back
6									PAD, Heater, Back
	05183316AA	1	J, T		49			*K6	Driver
		1	J, T		74			*K6	Driver
		1	U		49, 74			*K6	Driver
	05183317AA	1	J, T		49			*K6	Passenger
		1	U		49, 74			*K6	Passenger
		1	J, T		74			*K6	Passenger
7									FOAM, Seat Cushion

COMPASS/PATRIOT (MK)

SERIES	LINE	BODY	ENGINE	TRANSMISSION
H = HIGHLINE L = LOWLINE P = PREMIUM	J = JEEP - 4WD T = JEEP - 2WD	49 = HATCHBACK TYPE #2 74 = SPORT UTILITY 4-DR TYPE #4	ED3 = 2.4L 4 Cyl DOHC 16V Dual VVT Engine	DD7 = 5-Speed Manual T355 Transmission DEF = 6-Speed Manual Aisin BG6 Trans DAV = Continuously Variable Transmission DAW = Cont.Var. w/Off-Rd Crawl Ratio Trans

Front Seat - Trim Code [K6]
Figure IMK-540

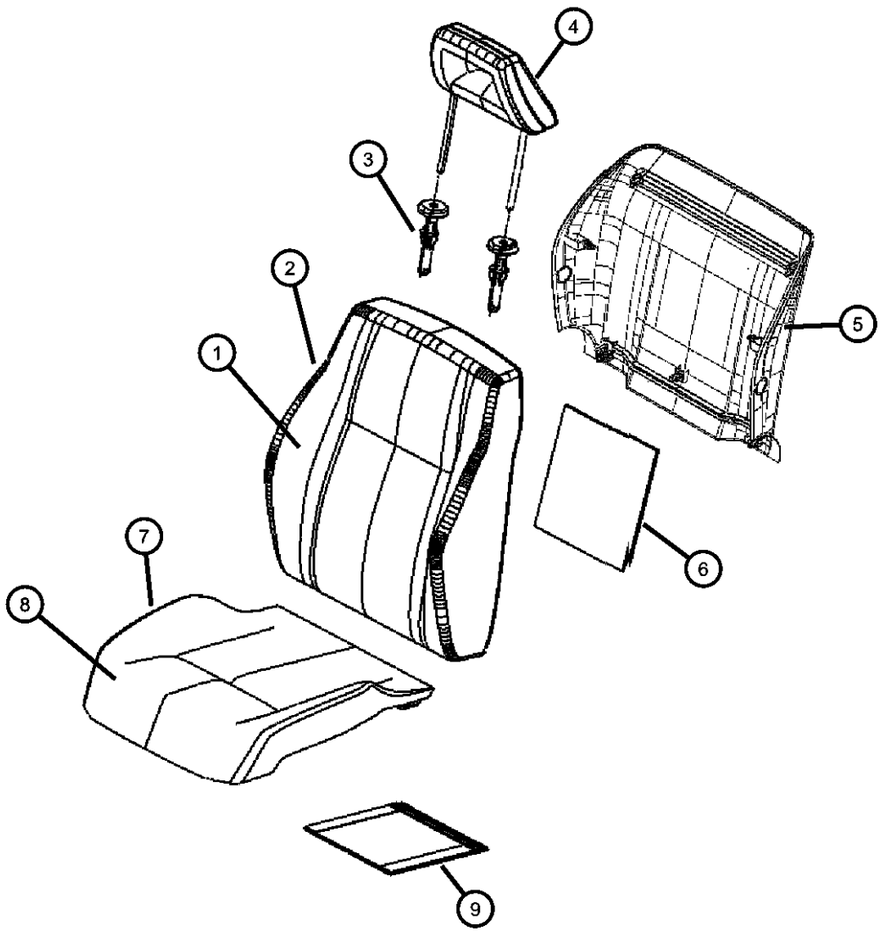

ITEM	PART NUMBER	QTY	LINE	SERIES	BODY	ENGINE	TRANS	TRIM	DESCRIPTION
	68001647AA	2	J, T		49			*K6	Right & Left
		2	U		49, 74			*K6	Export, Right & Left
		1	J, T		74			*K6	Right & Left
8									COVER, Front Seat Cushion
	1EX191D5AA	2	J, T		49			*K6	[DA] , Export
		2	J, T		74			*K6	[DA] , Export
	1HK201D5AA	2	J, T		74			*K6	[DA]
	1EX191K2AA	2	J, T		49			*K6	[KA] , Export
		2	J, T		74			*K6	[KA] , Export
		1	J, T		49			*K6	[DA]
	1HK201K2AA	2	J, T		49			*K6	[KA]
		2	J, T		74			*K6	[KA]
9									PAD, Heater, Cushion
	05183318AA	2	J, T		49			*K6	
		2	J, T		74			*K6	

COMPASS/PATRIOT (MK)

SERIES	LINE	BODY	ENGINE	TRANSMISSION
H = HIGHLINE L = LOWLINE P = PREMIUM	J = JEEP - 4WD T = JEEP - 2WD	49 = HATCHBACK TYPE #2 74 = SPORT UTILITY 4-DR TYPE #4	ED3 = 2.4L 4 Cyl DOHC 16V Dual VVT Engine	DD7 = 5-Speed Manual T355 Transmission DEF = 6-Speed Manual Aisin BG6 Trans DAV = Continuously Variable Transmission DAW = Cont.Var. w/Off-Rd Crawl Ratio Trans

Rear Seat
Figure IMK-610

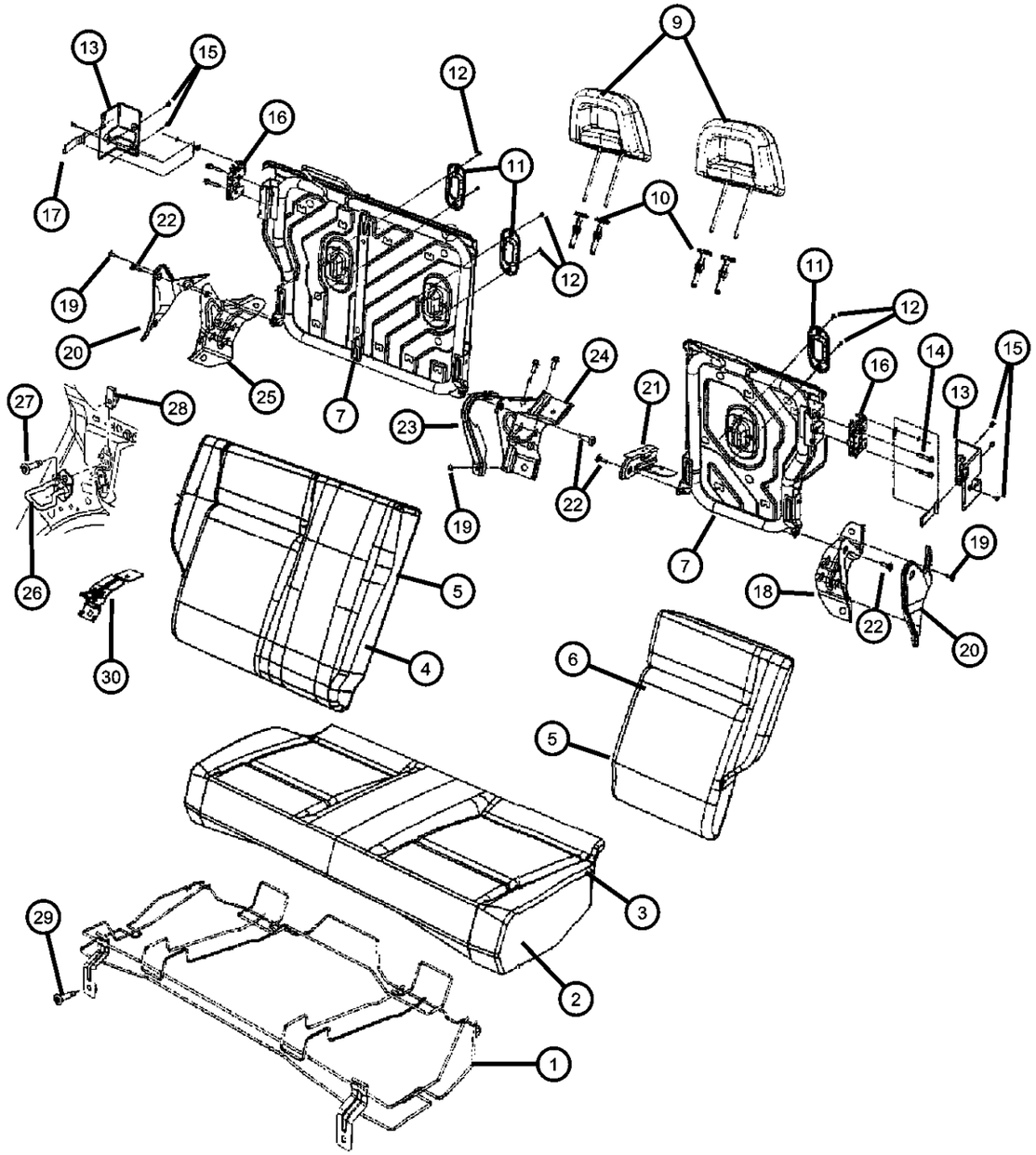

ITEM	PART NUMBER	QTY	LINE	SERIES	BODY	ENGINE	TRANS	TRIM	DESCRIPTION
1									FRAME, Seat cushion
	68001882AA	1	U		49, 74			*E6	
		1	J, T		49, 74			*D7	
		1	U		49, 74			*D7	
		1	J, T		49, 74			*E6	
		1	U		49, 74			*AL	
		1	J, T		49, 74			*AL	
		1	J, T		74			*K6	
		1	J, T		49			*K6	
2									FOAM, Seat Cushion
	68001881AA	1	J, T		49, 74			*E6	
		1	U		49, 74			*E6	
		1	J, T		49, 74			*D7	
		1	U		49, 74			*D7	
		1	J, T		49, 74			*AL	
		1	U		49, 74			*AL	
	68024678AA	1	J, T		74			*K6	
		1	J, T		49			*K6	
		1	U		49, 74			*K6	
3									COVER, Rear Seat Cushion
	1EX251D5AA	1	J, T		49, 74			*D7	[DA]
		1	U		49, 74			*D7	[DA]
		1	J, T		74			*K6	[DA] , Export
	1EX251K2AA	1	J, T		49, 74			*D7	[KA]
		1	U		49, 74			*D7	[KA]
		1	J, T		49			*K6	[KA] , Export
	1EX261DAAA	1	J, T		49, 74			*AL	[DA]
		1	U		49, 74			*AL	[DA]
	1EX261KAAA	1	J, T		49, 74			*AL	[KA]
		1	U		49, 74			*AL	[KA]
	1EX271DAAA	1	J, T		49, 74			*E6	[DA]
		1	U		49, 74			*E6	[DA]
	1EX271KAAA	1	J, T		49, 74			*E6	[KA]

COMPASS/PATRIOT (MK)

SERIES	LINE	BODY	ENGINE	TRANSMISSION
H = HIGHLINE L = LOWLINE P = PREMIUM	J = JEEP - 4WD T = JEEP - 2WD	49 = HATCHBACK TYPE #2 74 = SPORT UTILITY 4-DR TYPE #4	ED3 = 2.4L 4 Cyl DOHC 16V Dual VVT Engine	DD7 = 5-Speed Manual T355 Transmission DEF = 6-Speed Manual Aisin BG6 Trans DAV = Continuously Variable Transmission DAW = Cont.Var. w/Off-Rd Crawl Ratio Trans

AR = use ase required - = Non illustrrated part

Rear Seat
Figure IMK-610

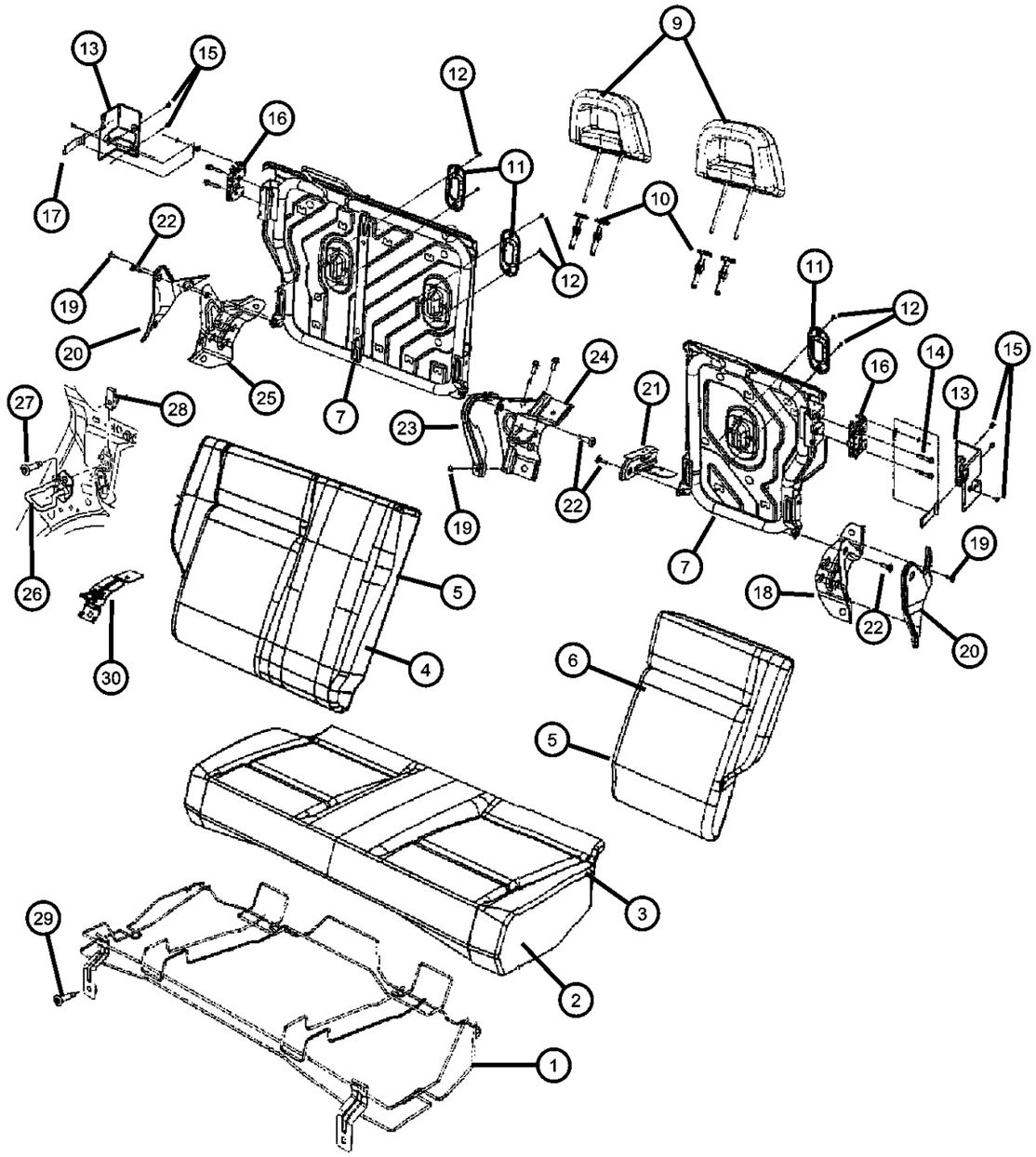

ITEM	PART NUMBER	QTY	LINE	SERIES	BODY	ENGINE	TRANS	TRIM	DESCRIPTION
		1	U		49, 74			*E6	[KA]
	1HK251D5AA	1	J, T		49			*K6	[DA]
		1	J, T		74			*K6	[DA]
	1HK251K2AA	1	J, T		49			*K6	[KA]
		1	J, T		74			*K6	[KA]
4									COVER, Rear Seat Back, 60% Side
	1EX281D5AA	1	J, T		49, 74			*D7	[DA]
	1EX281K2AA	1	J, T		49, 74			*D7	[KA]
	1EX301D5AA	1	J		49			*D7	[DA] , With [AGV]
	1EX301K2AA	1	J, T		74, 49			*D7	[KA] , With [AGV]
	1EX341DAAA	1	J		49, 74			*AL	[DA]
		1	U		49, 74			*AL	[DA]
	1EX341KAAA	1	J		49, 74			*AL	[KA]
		1	U		49, 74			*AL	[KA]
	1EX361DAAA	1	J, T		49, 74			*E6	[DA]
	1EX361KAAA	1	J, T		49, 74			*E6	[KA]
	1EX381DAAA	1	U		49, 74			*E6	[DA]
	1EX381KAAA	1	U		49, 74			*E6	[KA]
	1EY981D5AA	1	U		49, 74			*D7	[DA] , With [AGV]
	1EY981K2AA	1	U		49, 74			*D7	[KA] , With [AGV]
	1EZ051DAAA	1	J, T		49, 74			*E6	[DA] , With [AGV] [CDH] [XCA]
	1EZ051KAAA	1	J, T		49, 74			*E6	[KA] , With [AGV] [CDH] [XCA]
	1FA321DAAA	1	J, T		49, 74			*AL	[DA] , With [AGV]
	1FA321KAAA	1	J, T		49, 74			*AL	[KA] , With [AGV]
	1HK24BD5AA	1	J, T		74			*K6	[DA]
		1	J, T		49			*K6	[DA]
	1HK24DK2AA	1	J, T		74			*K6	[KA]
		1	J, T		49			*K6	[KA]
	1HK741D5AA	1	J, T		49			*K6	[DA] , With [CAX]
		1	J, T		74			*K6	[DA] , With [CAX]
	1HK741K2AA	1	J, T		74			*K6	[KA] , With [CAX]
	1HR421D5AA	1	J, T		49			*K6	[DA] , With [AGV]

COMPASS/PATRIOT (MK)

SERIES	LINE	BODY	ENGINE	TRANSMISSION
H = HIGHLINE L = LOWLINE P = PREMIUM	J = JEEP - 4WD T = JEEP - 2WD	49 = HATCHBACK TYPE #2 74 = SPORT UTILITY 4-DR TYPE #4	ED3 = 2.4L 4 Cyl DOHC 16V Dual VVT Engine	DD7 = 5-Speed Manual T355 Transmission DEF = 6-Speed Manual Aisin BG6 Trans DAV = Continuously Variable Transmission DAW = Cont.Var. w/Off-Rd Crawl Ratio Trans

AR = use ase required - = Non illustrrated part

Rear Seat
Figure IMK-610

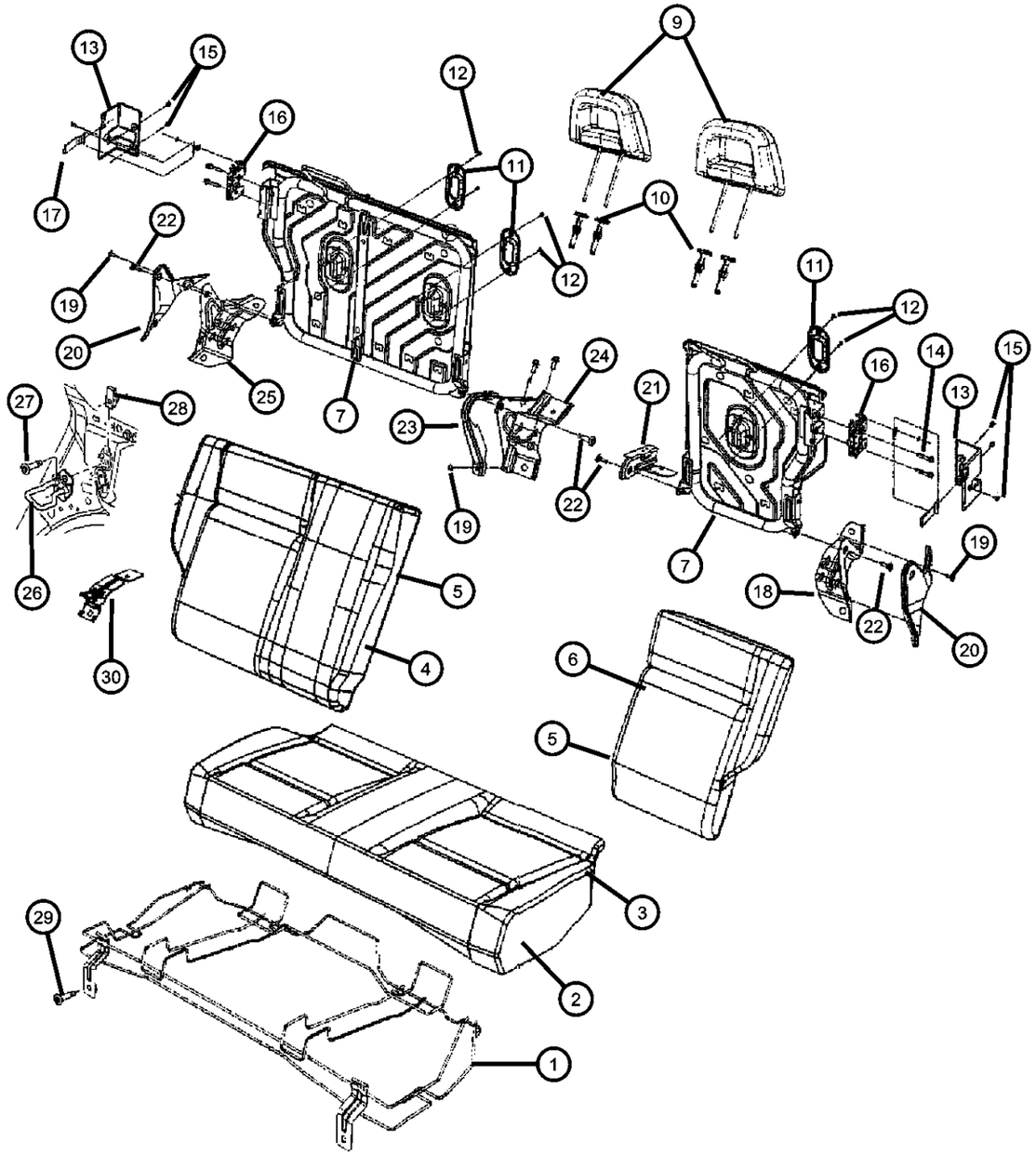

ITEM	PART NUMBER	QTY	LINE	SERIES	BODY	ENGINE	TRANS	TRIM	DESCRIPTION
		1	J, T		49			*K6	[KA] , With [CAX]
	1HR421K2AA	1	J, T		74			*K6	[KA] , With [AGV]
		1	J, T		74			*K6	[DA] , With [AGV]
		1	U		49, 74			*K6	[DA]
		1	J, T		49			*K6	[KA] , With [AGV]
		1	U		49, 74			*K6	[KA]
5									FOAM, Seat Back
	68003294AA	1	J, T		49, 74			*E6	60%
		1	J, T		49, 74			*D7	60%
		1	J, T		49, 74			*AL	60%
	68003295AA	1	J, T		49, 74			*E6	40%
		1	J, T		49, 74			*D7	40%
		1	J, T		49, 74			*AL	40%
	68003296AA	1	U		49, 74			*E6	60%
		1	U		49, 74			*AL	60%
		1	U		49, 74			*D7	60%
	68003297AA	1	U		49, 74			*E6	40%
		1	U		49, 74			*D7	40%
		1	U		49, 74			*AL	40%
	68003298AA	1	J, T		74			*K6	60% , Export
		1	U		49, 74			*K6	60% , Export
		1	J, T		49			*K6	60%
		1	J, T		49			*K6	60% , Export
		1	J, T		74			*K6	60%
	68003299AA	1	J, T		74			*K6	40% , Export
		1	J, T		49			*K6	40% , Export
		1	U		49, 74			*K6	40% , Export
		1	J, T		49			*K6	40%
		1	J, T		74			*K6	40%
6									COVER, Rear Seat Back, 40% Side
	1EX291D5AA	1	J, T		49, 74			*D7	[DA]
	1EX291K2AA	1	J, T		49, 74			*D7	[KA]

COMPASS/PATRIOT (MK)

SERIES	LINE	BODY	ENGINE	TRANSMISSION
H = HIGHLINE L = LOWLINE P = PREMIUM	J = JEEP - 4WD T = JEEP - 2WD	49 = HATCHBACK TYPE #2 74 = SPORT UTILITY 4-DR TYPE #4	ED3 = 2.4L 4 Cyl DOHC 16V Dual VVT Engine	DD7 = 5-Speed Manual T355 Transmission DEF = 6-Speed Manual Aisin BG6 Trans DAV = Continuously Variable Transmission DAW = Cont.Var. w/Off-Rd Crawl Ratio Trans

Rear Seat
Figure IMK-610

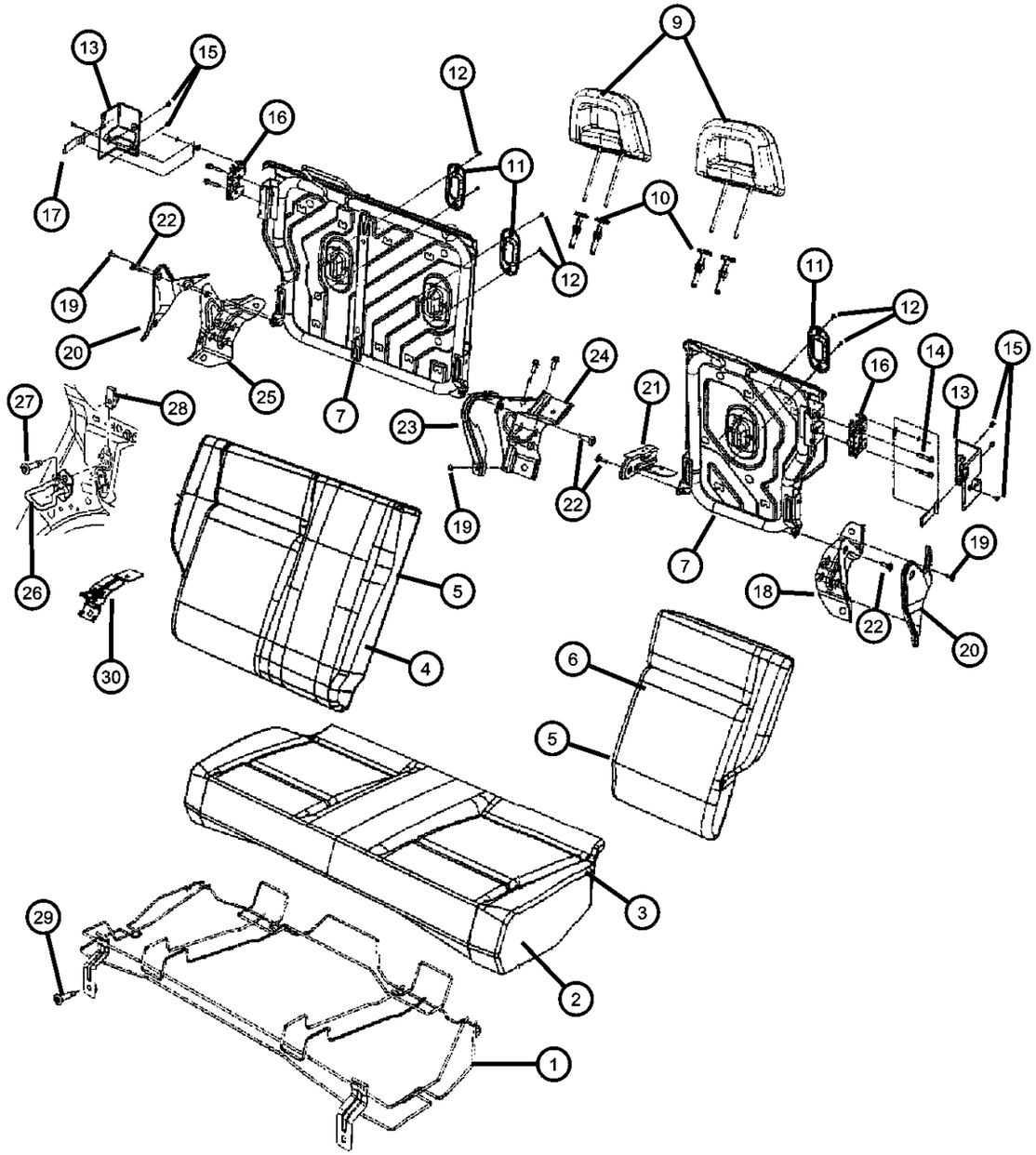

ITEM	PART NUMBER	QTY	LINE	SERIES	BODY	ENGINE	TRANS	TRIM	DESCRIPTION
	1EX311D5AA	1	J, T		49, 74			*D7	[DA] , With [AGV]
	1EX311K2AA	1	J, T		49, 74			*D7	[KA] , With [AGV]
	1EX331DAAA	1	J, T		49, 74			*E6	[DA]
	1EX331KAAA	1	J, T		49, 74			*E6	[KA]
	1EX351DAAA	1	J		49, 74			*AL	[DA]
		1	U		49, 74			*AL	[DA]
	1EX351KAAA	1	J		49, 74			*AL	[KA]
		1	U		49, 74			*AL	[KA]
	1EY971DAAA	1	U		49, 74			*E6	[DA] , With [CDH]
	1EY971KAAA	1	U		49, 74			*E6	[KA] , With [CDH]
	1EZ031D5AA	1	U		49, 74			*D7	[DA] , With [AGV]
	1EZ031K2AA	1	U		49, 74			*D7	[KA] , With [AGV]
	1EZ041DAAA	1	J, T		49, 74			*E6	[DA] , With [XCA] [AGV] [CDH]
	1EZ041KAAA	1	J, T		49, 74			*E6	[KA] , With [XCA] [AGV] [CDH]
	1FA331DAAA	1	J, T		49, 74			*AL	[DA] , With [AGV]
	1FA331KAAA	1	J, T		49, 74			*AL	[KA] , With [AGV]
	1HK211K2AA	1	J, T		74			*K6	[KA]
		1	J, T		49			*K6	[KA]
	1HK21BD5AA	1	J, T		49			*K6	[DA]
		1	J, T		74			*K6	[DA]
	1HK491D5AA	1	J, T		74			*K6	[DA] , With [CAX]
		1	J, T		49			*K6	[DA] , With [CAX]
	1HK491K2AA	1	J, T		74			*K6	[KA] , With [CAX]
		1	J, T		49			*K6	[KA] , With [CAX]
	1HR411D5AA	1	U		49, 74			*K6	[DA] , With [CAX]
	1HR411K2AA	1	J, T		49			*K6	[KA] , With [AGV] , Export
		1	J, T		74			*K6	[KA] , With [AGV] , Export
		1	U		49, 74			*K6	[KA] , With [CAX]
	1HR421D5AA	1	J, T		49			*K6	[DA] , With [AGV] , Export
		1	J, T		74			*K6	[DA] , With [AGV] , Export
7									FRAME, Rear Seat Back
	68001884AA	1	J, T		49, 74			*D7	60%

COMPASS/PATRIOT (MK)

SERIES	LINE	BODY	ENGINE	TRANSMISSION
H = HIGHLINE L = LOWLINE P = PREMIUM	J = JEEP - 4WD T = JEEP - 2WD	49 = HATCHBACK TYPE #2 74 = SPORT UTILITY 4-DR TYPE #4	ED3 = 2.4L 4 Cyl DOHC 16V Dual VVT Engine	DD7 = 5-Speed Manual T355 Transmission DEF = 6-Speed Manual Aisin BG6 Trans DAV = Continuously Variable Transmission DAW = Cont.Var. w/Off-Rd Crawl Ratio Trans

AR = use ase required - = Non illustrrated part

Rear Seat
Figure IMK-610

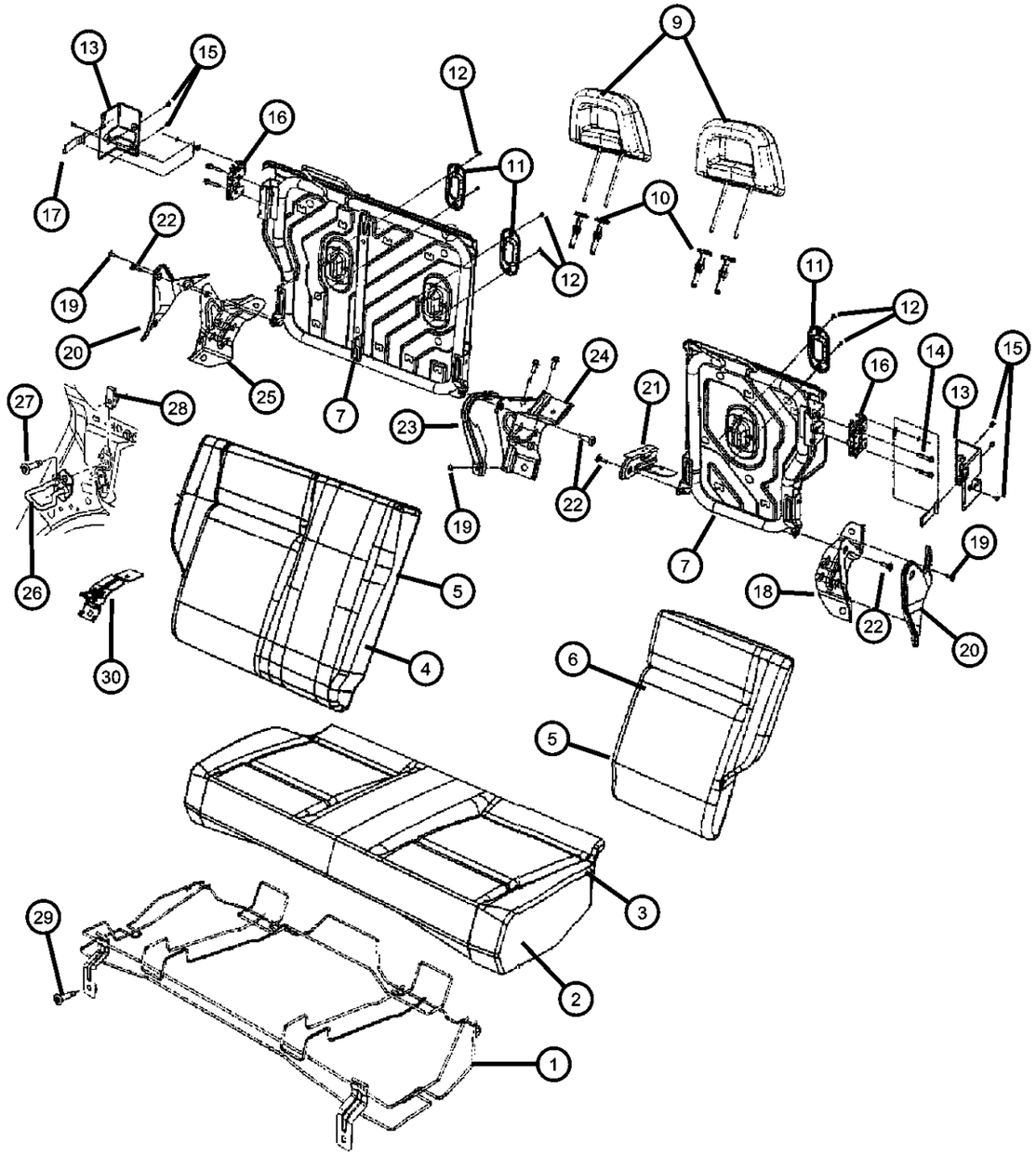

ITEM	PART NUMBER	QTY	LINE	SERIES	BODY	ENGINE	TRANS	TRIM	DESCRIPTION
	68001885AA	1	J, T		49, 74			*D7	40%
	68001886AA	1	J		49, 74			*D7	60%
		1	J		49, 74			*AL	60%
		1	U		49, 74			*AL	60%
		1	U		49, 74			*D7	60%
		1	U		74, 49			*E6	60%
	68001887AA	1	U		49, 74			*D7	40%
		1	U		49, 74			*E6	40%
		1	J		49, 74			*AL	40%
		1	U		49, 74			*AL	40%
		1	J		49, 74			*D7	40%
	68001888AA	1	J, T		49, 74			*E6	60%
		1	J, T		49			*K6	60%
		1	J, T		74			*K6	60%
	68001889AA	1	J, T		49, 74			*E6	40%
		1	J, T		74			*K6	40%
		1	J, T		49			*K6	40%
-8									BOLT
	05191915AA	8	U		49, 74			*D7	
		8	J, T		49, 74			*E6	
		8	U		49, 74			*E6	
		8	J, T		49, 74			*D7	
		8	J, T		49, 74			*AL	
		8	U		49, 74			*AL	
		1	J, T		74			*K6	
		1	J, T		49			*K6	
9									HEADREST, Rear
	1ER341DAAA	3	U		49, 74			*D7	[DA]
		3	U		49, 74			*E6	[DA]
		3	J		49, 74			*AL	[DA]
		3	U		49, 74			*AL	[DA]
		1	J, T		49, 74			*D7	[DA]

COMPASS/PATRIOT (MK)

SERIES	LINE	BODY	ENGINE	TRANSMISSION
H = HIGHLINE L = LOWLINE P = PREMIUM	J = JEEP - 4WD T = JEEP - 2WD	49 = HATCHBACK TYPE #2 74 = SPORT UTILITY 4-DR TYPE #4	ED3 = 2.4L 4 Cyl DOHC 16V Dual VVT Engine	DD7 = 5-Speed Manual T355 Transmission DEF = 6-Speed Manual Aisin BG6 Trans DAV = Continuously Variable Transmission DAW = Cont.Var. w/Off-Rd Crawl Ratio Trans

AR = use ase required - = Non illustrrated part

<< RETURN TO GROUP INDEX

Rear Seat
Figure IMK-610

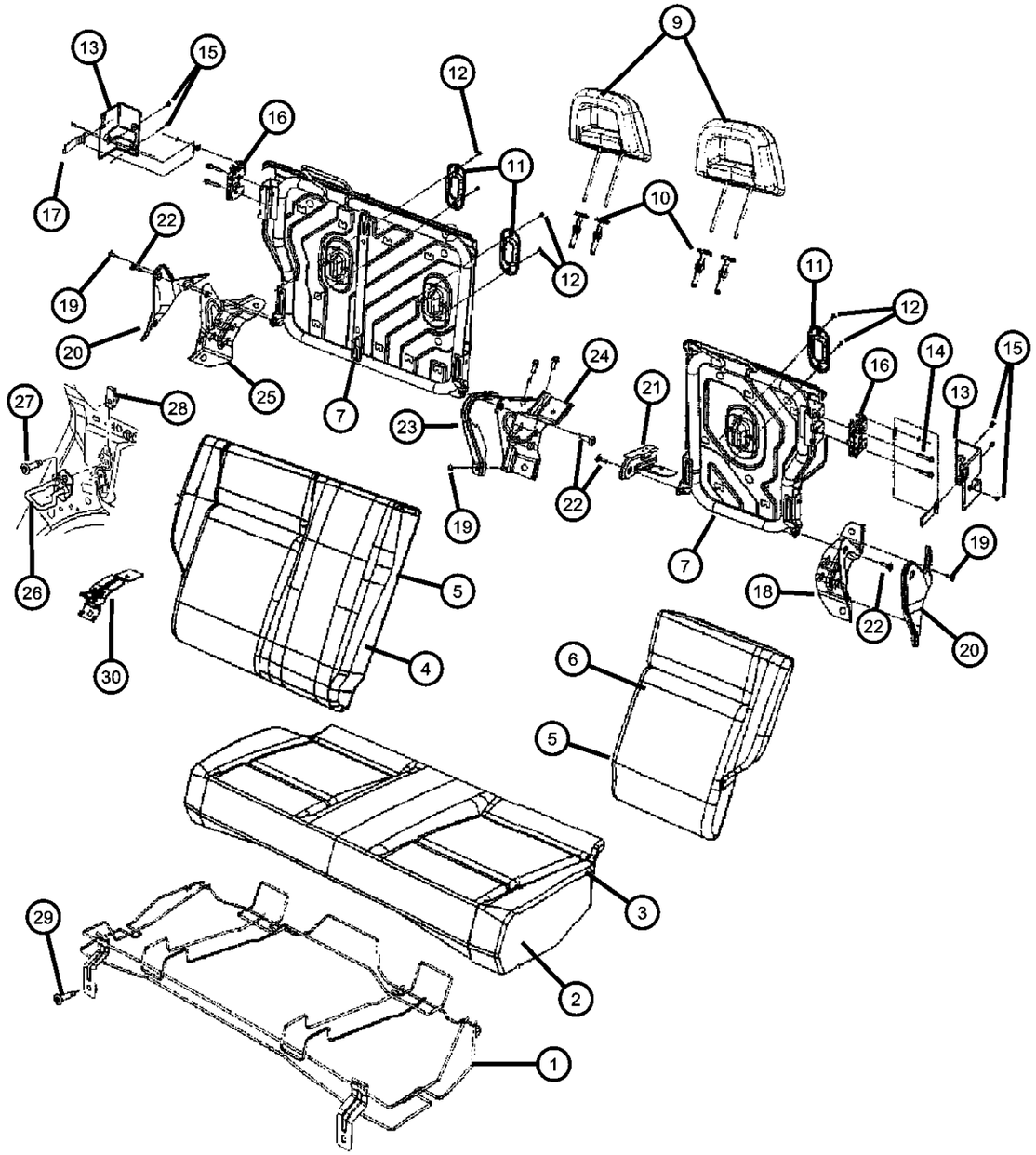

ITEM	PART NUMBER	QTY	LINE	SERIES	BODY	ENGINE	TRANS	TRIM	DESCRIPTION
		3	J		49			*D7	[DA]
	1ER341KAAA	3	U		49, 74			*E6	[KA]
		3	J		49, 74			*AL	[KA]
		1	J, T		49, 74			*D7	[KA]
		3	U		49, 74			*AL	[KA]
	1GW371D5AA	1	J, T		49			*K6	[DA]
		1	J, T		74			*K6	[DA]
		1	U		49, 74			*K6	[DA]
	1GW371K2AA	1	J, T		74			*K6	[KA]
		1	J, T		49			*K6	[KA]
		1	U		49, 74			*K6	[KA]
10									SLEEVE, Headrest
	1DS911DAAA	2	J, T		49, 74			*E6	[DA], Locking
		5	U		49, 74			*D7	[DA], Locking
		5	U		49, 74			*E6	[DA], Locking
		2	J, T		49, 74			*AL	[DA], Locking
		5	U		49, 74			*AL	[DA], Locking
		5	J, T		49, 74			*D7	[DA], Locking
	1DS911KAAA	2	J, T		49, 74			*E6	[KA], Locking
		5	U		49, 74			*E6	[KA], Locking
		2	J, T		49, 74			*D7	[KA], Locking
		3	U		49, 74			*D7	[KA], Locking
		2	J, T		49, 74			*AL	[KA], Locking
		5	U		49, 74			*AL	[KA], Locking
	1DS91BD5AA	1	J, T		49			*K6	[DA], Locking
		1	J, T		74			*K6	[DA], Locking
	1DS941DAAA	5	U		49, 74			*E6	[DA], Slave Cylinder
		2	J, T		49, 74			*E6	[DA], Slave Cylinder
		2	J, T		49, 74			*D7	[DA], Slave Cylinder
		3	U		49, 74			*D7	[DA], Slave Cylinder
		2	J, T		49, 74			*AL	[DA], Slave Cylinder
		5	U		49, 74			*AL	[DA], Slave Cylinder

COMPASS/PATRIOT (MK)

SERIES	LINE	BODY	ENGINE	TRANSMISSION
H = HIGHLINE L = LOWLINE P = PREMIUM	J = JEEP - 4WD T = JEEP - 2WD	49 = HATCHBACK TYPE #2 74 = SPORT UTILITY 4-DR TYPE #4	ED3 = 2.4L 4 Cyl DOHC 16V Dual VVT Engine	DD7 = 5-Speed Manual T355 Transmission DEF = 6-Speed Manual Aisin BG6 Trans DAV = Continuously Variable Transmission DAW = Cont.Var. w/Off-Rd Crawl Ratio Trans

Rear Seat
Figure IMK-610

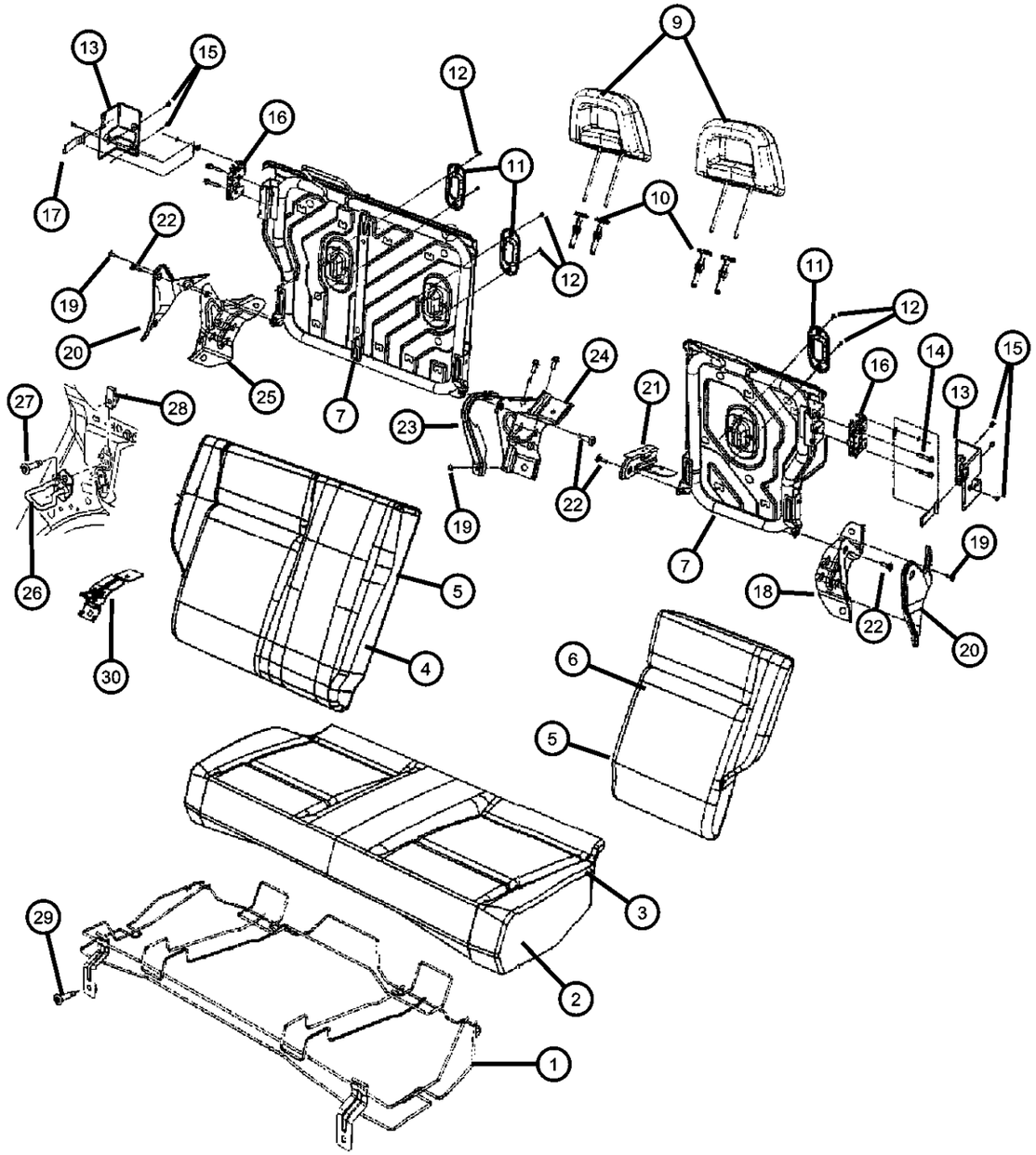

ITEM	PART NUMBER	QTY	LINE	SERIES	BODY	ENGINE	TRANS	TRIM	DESCRIPTION
	1DS941KAAA	2	J, T		49, 74			*E6	[KA], Slave Cylinder
		5	U		49, 74			*E6	[KA], Slave Cylinder
		5	U		49, 74			*D7	[KA], Slave Cylinder
		5	U		49, 74			*AL	[KA], Slave Cylinder
		2	J, T		49, 74			*AL	[KA], Slave Cylinder
		5	J, T		49, 74			*D7	[KA], Slave Cylinder
		2	J, T		74			*K6	[KA], Slave Cylinder
		2	J, T		49			*K6	[KA], Slave Cylinder
11									BEZEL, TETHER
	0WT351D5AA	3	J, T		49, 74			*E6	[DA]
		3	U		49, 74			*E6	[DA]
		3	U		49, 74			*D7	[DA]
		3	J, T		49, 74			*D7	[DA]
		3	J, T		49, 74			*AL	[DA]
		3	U		49, 74			*AL	[DA]
		3	J, T		49			*K6	[DA]
		3	J, T		74			*K6	[DA]
	0WT351KAAA	3	U		49, 74			*D7	[KA]
		3	J, T		49, 74			*E6	[KA]
		3	U		49, 74			*E6	[KA]
		3	J, T		49, 74			*D7	[KA]
		3	J, T		49, 74			*AL	[KA]
		3	J, T		49, 74			*D7	[KA]
		3	J, T		49, 74			*AL	[KA]
		3	U		49, 74			*AL	[KA]
		3	J, T		74			*K6	[KA]
		3	J, T		49			*K6	[KA]
12									SCREW, Trim
	05072741AA	6	J, T		49, 74			*D7	
		6	U		49, 74			*E6	
		6	J, T		49, 74			*E6	
		6	U		49, 74			*AL	
		6	J, T		49, 74			*AL	
		4	U		49, 74			*D7	

COMPASS/PATRIOT (MK)

SERIES	LINE	BODY	ENGINE	TRANSMISSION
H = HIGHLINE L = LOWLINE P = PREMIUM	J = JEEP - 4WD T = JEEP - 2WD	49 = HATCHBACK TYPE #2 74 = SPORT UTILITY 4-DR TYPE #4	ED3 = 2.4L 4 Cyl DOHC 16V Dual VVT Engine	DD7 = 5-Speed Manual T355 Transmission DEF = 6-Speed Manual Aisin BG6 Trans DAV = Continuously Variable Transmission DAW = Cont.Var. w/Off-Rd Crawl Ratio Trans

Rear Seat
Figure IMK-610

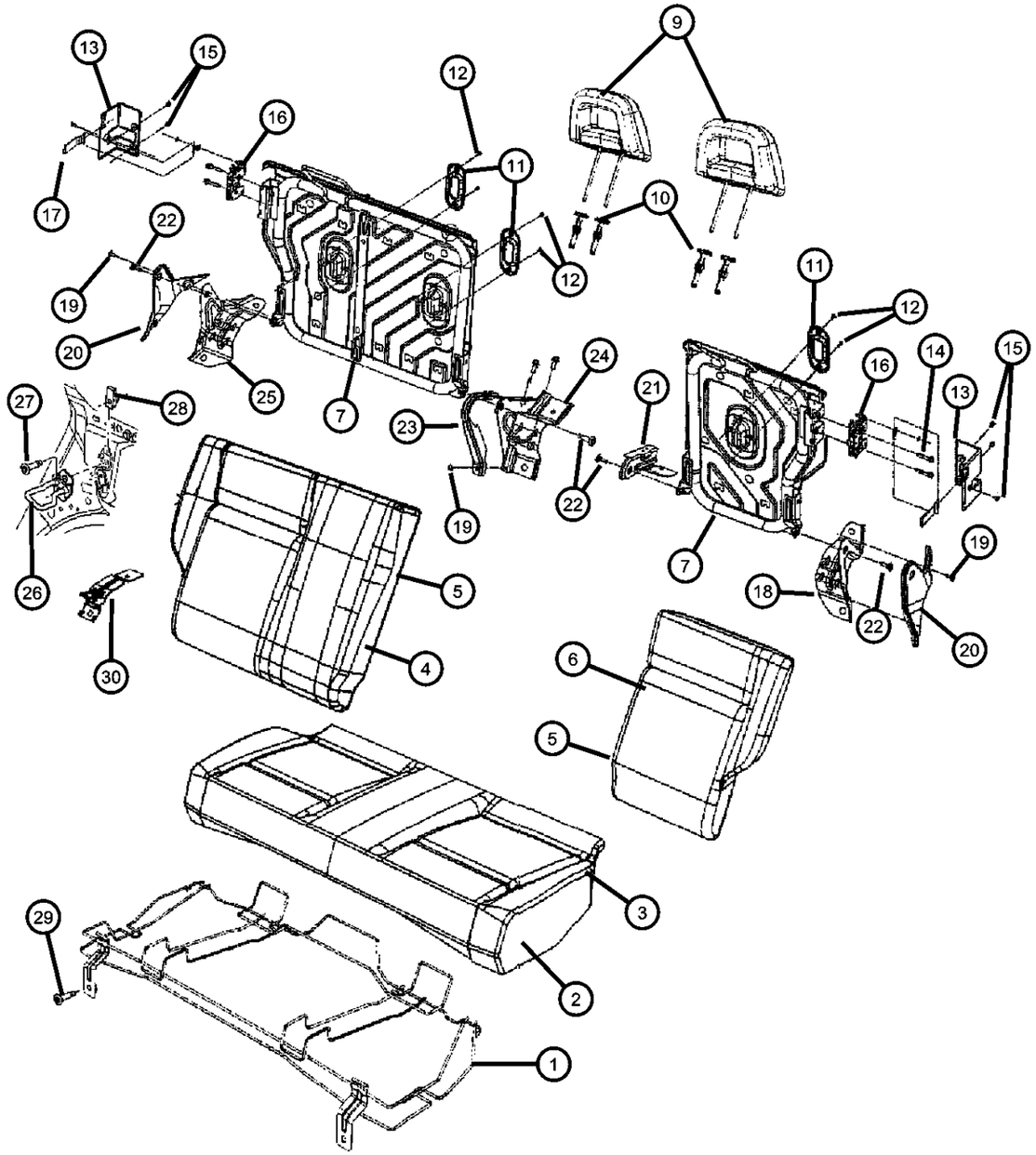

ITEM	PART NUMBER	QTY	LINE	SERIES	BODY	ENGINE	TRANS	TRIM	DESCRIPTION
		6	J, T		74			*K6	
13									BEZEL, Seat Latch
	1EP161DAAA	1	J, T		49, 74			*E6	[DA] , 60%
		1	J, T		49, 74			*D7	[DA] , 60%
	1EP161KAAA	1	J, T		49, 74			*E6	[KA] , 60%
		1	J, T		49, 74			*D7	[KA] , 60%
	1EP171DAAA	1	J, T		49, 74			*E6	[DA] , 40%
		1	J, T		49, 74			*D7	[DA] , 40%
	1EP171KAAA	1	J, T		49, 74			*E6	[KA] , 40%
		1	J, T		49, 74			*D7	[KA] , 40%
14									BOLT, Seat
	05072205AA	1	J, T		49, 74			*D7	
		1	J, T		49, 74			*AL	
15									SCREW
	05139633AA	6	U		49, 74			*D7	
		6	J, T		49, 74			*E6	
		6	J		49			*D7	
		6	J, T		49			*K6	
		6	J, T		74			*K6	
16									LATCH, Seat
	05139664AA	1	J, T		49, 74			*E6	40%
		1	J, T		49, 74			*D7	40%
		1	J, T		74			*K6	40%
		1	J, T		49			*K6	40%
	05139665AA	1	J, T		49, 74			*E6	60%
		1	J, T		49, 74			*D7	60%
		1	J, T		74			*K6	60%
		1	J, T		49			*K6	60%
17									STRAP, Seat, Includes Cable
	1EX601D5AA	1	J, T		49			*K6	[DA]
		1	J, T		74			*K6	[DA]
	1EX601K2AA	1	J, T		74			*K6	[KA]

COMPASS/PATRIOT (MK)

SERIES	LINE	BODY	ENGINE	TRANSMISSION
H = HIGHLINE L = LOWLINE P = PREMIUM	J = JEEP - 4WD T = JEEP - 2WD	49 = HATCHBACK TYPE #2 74 = SPORT UTILITY 4-DR TYPE #4	ED3 = 2.4L 4 Cyl DOHC 16V Dual VVT Engine	DD7 = 5-Speed Manual T355 Transmission DEF = 6-Speed Manual Aisin BG6 Trans DAV = Continuously Variable Transmission DAW = Cont.Var. w/Off-Rd Crawl Ratio Trans

AR = use ase required - = Non illustrrated part

Rear Seat
Figure IMK-610

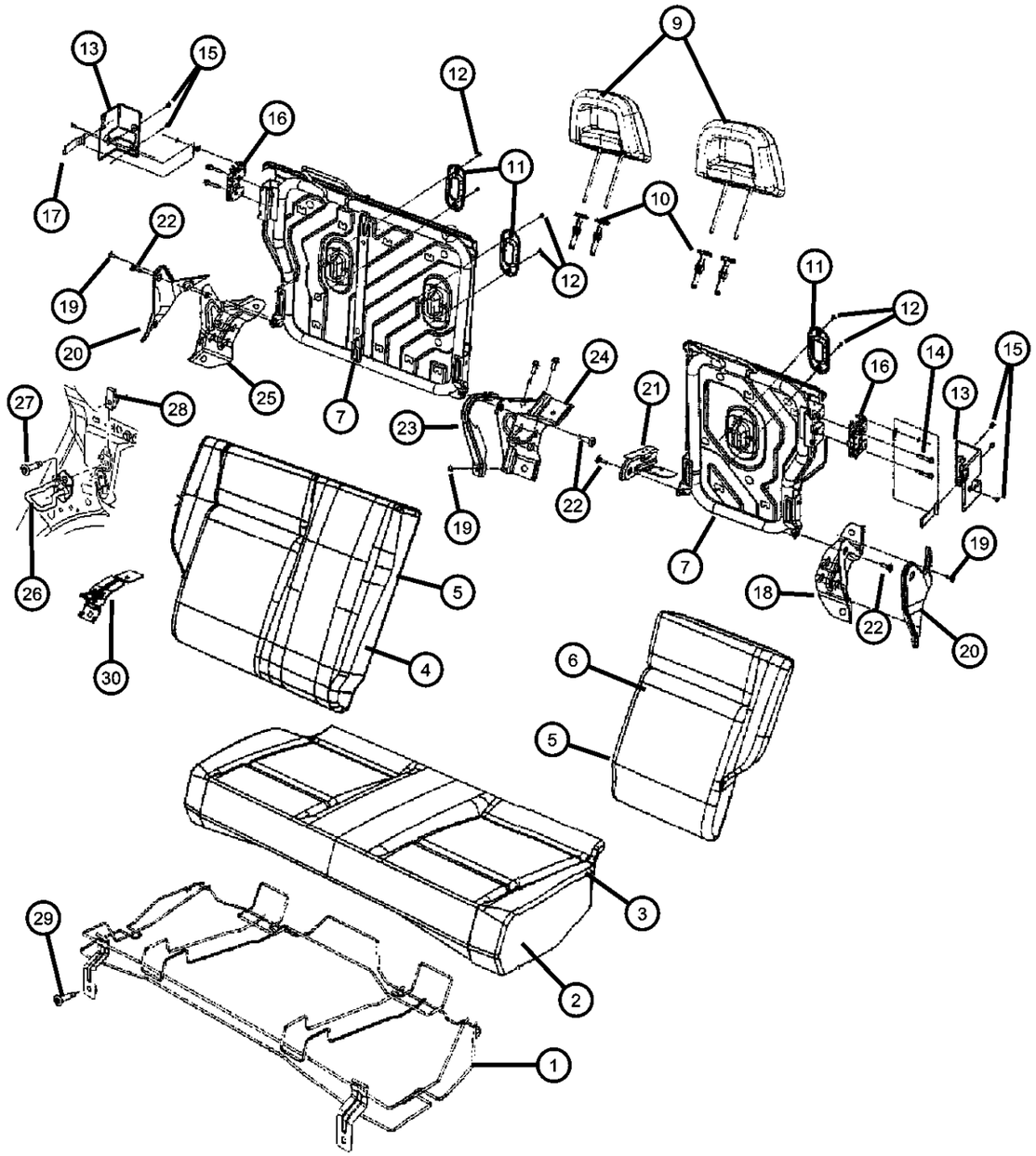

ITEM	PART NUMBER	QTY	LINE	SERIES	BODY	ENGINE	TRANS	TRIM	DESCRIPTION
		1	J, T		49			*K6	[KA]
	1EX60DK7AA	1	J, T		74			*E6	[KA]
	1EX60XDVAA	1	J, T		74			*E6	[DA]
18									BRACKET
	68001739AA	1	J, T		49, 74			*E6	
		1	U		49, 74			*D7	
		1	U		49, 74			*E6	
		1	J, T		49, 74			*D7	
		1	J, T		49, 74			*AL	
		1	U		49, 74			*AL	
19									CLIP
	05161334AA	2	U		49, 74			*E6	
		2	J, T		49, 74			*D7	
		2	U		49, 74			*D7	
		2	J, T		49, 74			*E6	
		2	J, T		49, 74			*AL	
		2	U		49, 74			*AL	
		4	J, T		49			*K6	
		22	J, T		74			*K6	
20									SHIELD, Seat
	1EP981DAAA	1	J		49			*D7	[DA] , 60% , Recliner Spring Cover
	1EP981K2AA	1	J		49			*D7	[KA] , 60% , Recliner Spring Cover
	1EP981KAAA	1	J		49			*AL	[KA] , 60% , Recliner Spring Cover
	1EP991DAAA	1	J		49			*D7	[DA] , 40% , Recliner Spring Cover
	1EP991K2AA	1	J		49			*D7	[KA] , 40% , Recliner Spring Cover
	1EP991KAAA	1	J		49			*AL	[KA] , 40% , Recliner Spring Cover
	1EX161D5AA	1	J, T		49, 74			*D7	[DA] , 60%
	1EX161DAAA	1	J, T		49, 74			*AL	[DA] , 60%
	1EX161K2AA	1	J, T		49, 74			*D7	[KA] , 60%

COMPASS/PATRIOT (MK)

SERIES	LINE	BODY	ENGINE	TRANSMISSION
H = HIGHLINE L = LOWLINE P = PREMIUM	J = JEEP - 4WD T = JEEP - 2WD	49 = HATCHBACK TYPE #2 74 = SPORT UTILITY 4-DR TYPE #4	ED3 = 2.4L 4 Cyl DOHC 16V Dual VVT Engine	DD7 = 5-Speed Manual T355 Transmission DEF = 6-Speed Manual Aisin BG6 Trans DAV = Continuously Variable Transmission DAW = Cont.Var. w/Off-Rd Crawl Ratio Trans

Rear Seat
Figure IMK-610

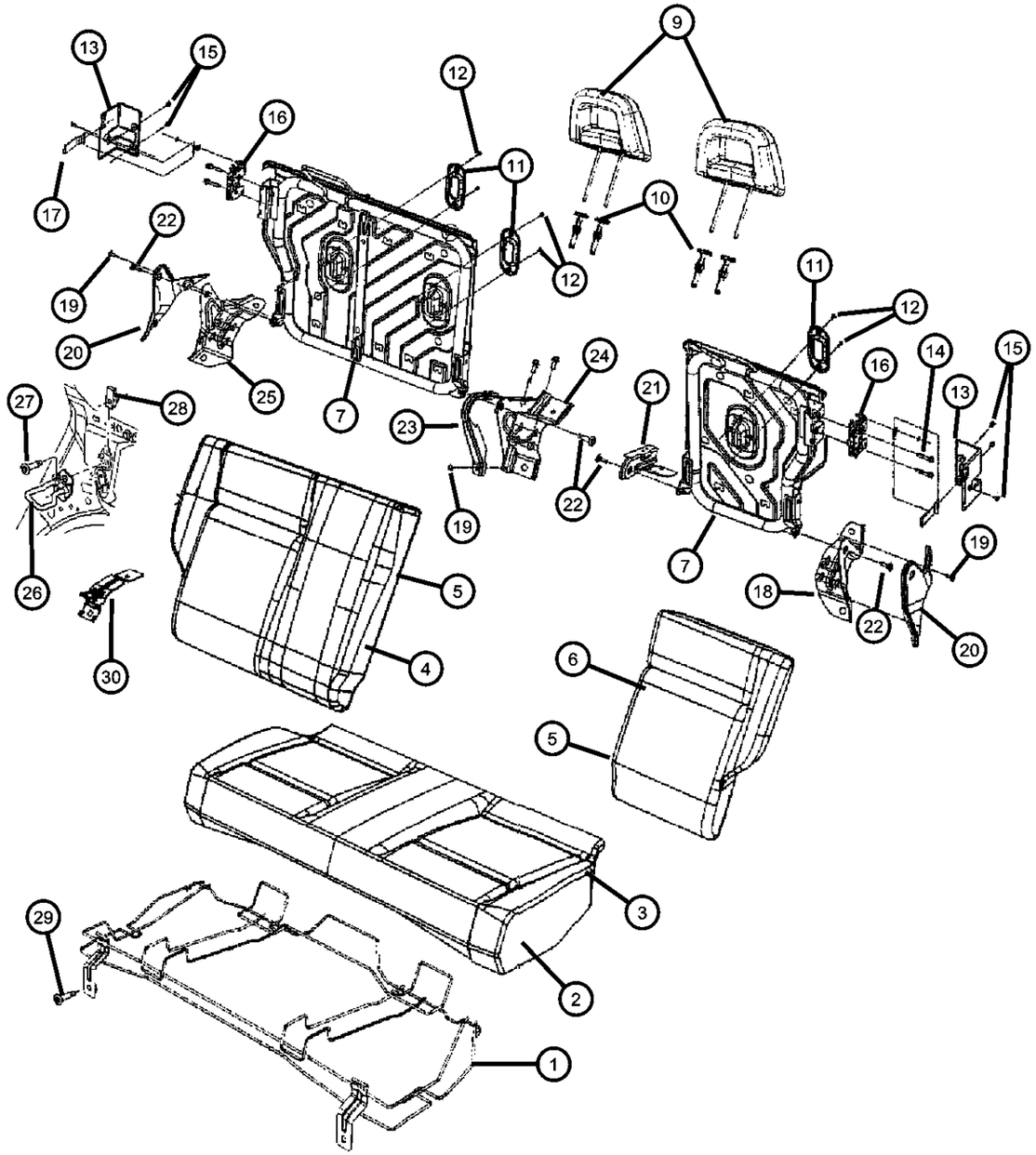

ITEM	PART NUMBER	QTY	LINE	SERIES	BODY	ENGINE	TRANS	TRIM	DESCRIPTION
	1EX161K5AA	1	J		49			*D7	[KA] , 60%
	1EX161KAAA	1	J, T		49, 74			*AL	[KA] , 60%
	1EX171K5AA	1	J		49			*D7	[KA] , 40%
	1EX171KAAA	1	J, T		49, 74			*AL	[KA] , 40%
	1EX171D5AA	1	J, T		49, 74			*D7	[DA] , 40%
	1EX171DAAA	1	J, T		49, 74			*AL	[DA] , 40%
	1EX171K2AA	1	J, T		49, 74			*D7	[KA] , 40%
21									BRACKET
	68001653AA	1	J, T		49, 74			*E6	
		1	J, T		49, 74			*D7	
		1	J, T		49			*K6	
		1	J, T		74			*K6	
22									BOLT
	05139634AA	4	J, T		49, 74			*E6	
		2	U		49, 74			*D7	
		2	U		49, 74			*E6	
		4	J, T		49, 74			*D7	
		2	J, T		49, 74			*AL	
		2	U		49, 74			*AL	
		4	J, T		74			*K6	
		4	J, T		49			*K6	
23									SHIELD, Seat
	1FN631D5AA	1	J, T		49, 74			*D7	[DA]
		1	J, T		49			*K6	[DA]
		1	J, T		74			*K6	[DA]
	1FN631DAAA	1	J		49, 74			*AL	[DA]
	1FN631K2AA	1	J, T		49, 74			*D7	[KA]
		1	J, T		49			*K6	[KA]
		1	J, T		74			*K6	[KA]
	1FN631K5AA	1	J		49			*D7	[KA]
	1FN631KAAA	1	J, T		49, 74			*AL	[KA]
24									BRACKET

COMPASS/PATRIOT (MK)

SERIES	LINE	BODY	ENGINE	TRANSMISSION
H = HIGHLINE L = LOWLINE P = PREMIUM	J = JEEP - 4WD T = JEEP - 2WD	49 = HATCHBACK TYPE #2 74 = SPORT UTILITY 4-DR TYPE #4	ED3 = 2.4L 4 Cyl DOHC 16V Dual VVT Engine	DD7 = 5-Speed Manual T355 Transmission DEF = 6-Speed Manual Aisin BG6 Trans DAV = Continuously Variable Transmission DAW = Cont.Var. w/Off-Rd Crawl Ratio Trans

AR = use ase required - = Non illustrrated part

Rear Seat
Figure IMK-610

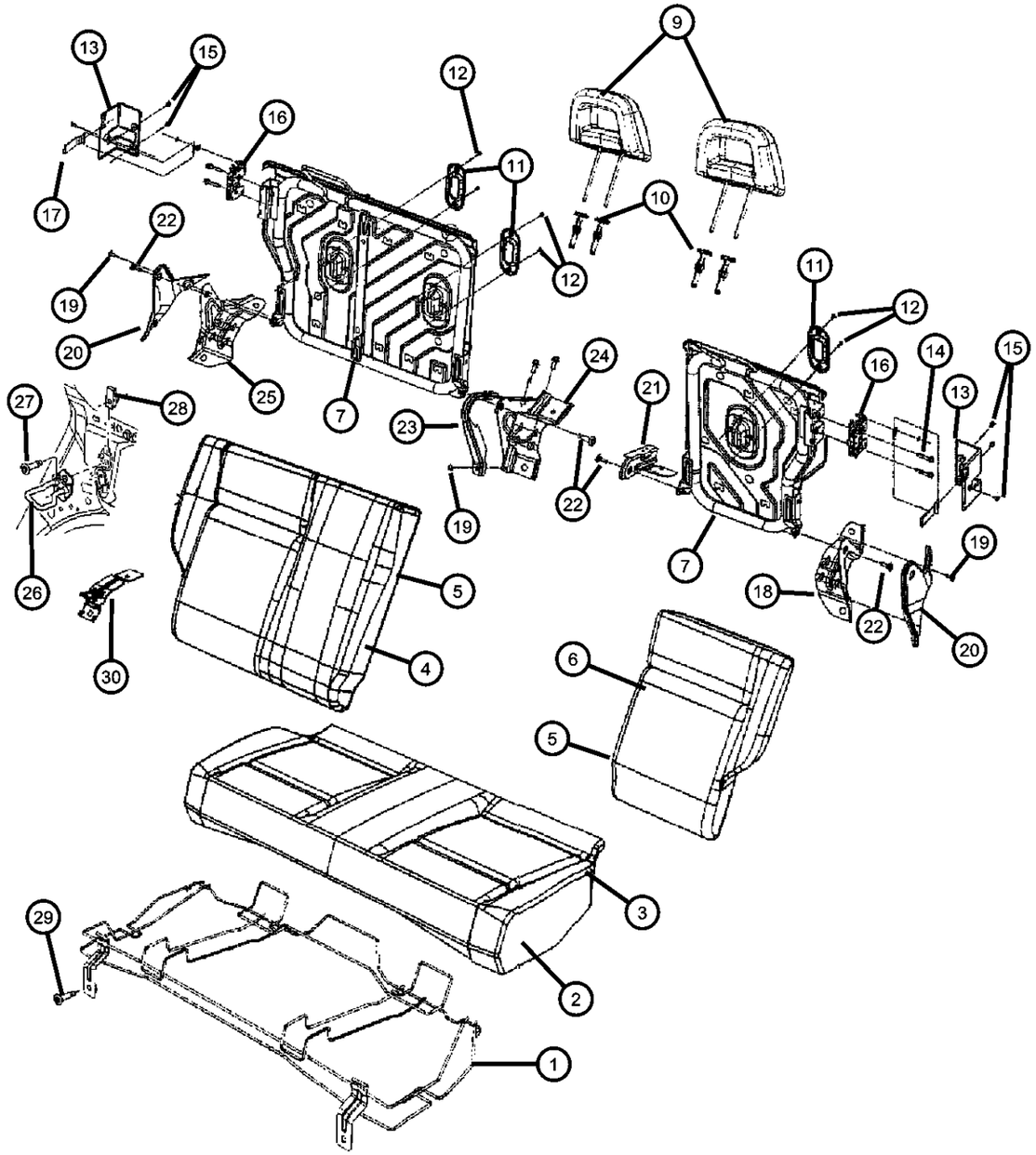

ITEM	PART NUMBER	QTY	LINE	SERIES	BODY	ENGINE	TRANS	TRIM	DESCRIPTION
	68001738AA	1	J, T		49, 74			*E6	
		1	U		49, 74			*E6	
		1	J, T		49, 74			*D7	
		1	U		49, 74			*D7	
		1	J, T		74, 49			*AL	
		1	U		49, 74			*AL	
25									BRACKET
	68001652AA	1	J, T		49, 74			*E6	
		1	J, T		49, 74			*D7	
		1	U		49, 74			*D7	
		1	J, T		49			*K6	
		1	J, T		74			*K6	
26	04645985AC	2							STRIKER, Seat Latch
27	06506749AA	4	J, T, U		49, 74				SCREW, 6 Lobed
28	06501260	4							NUT
29	06104233AA	4							BOLT, Hex Head
30									BRACKET
	04645994AA	1	J, T		49, 74			*D7	
		1	J, T		49, 74			*AL	
-31									RECLINER, Seat Back
	68001740AA	1	J, T		74			*K6	60%
		1	J, T		74			*D7	60%
		1	J, T		49			*AL	60%
		1	J, T		74			*AL	60%
		1	J, T		74			*E6	60%
	68001741AA	1	J, T		74			*K6	40%
		1	J, T		49			*AL	40%
		1	J, T		74			*AL	40%
		1	J, T		74			*E6	40%
		1	J, T		74			*D7	40%

COMPASS/PATRIOT (MK)

SERIES	LINE	BODY	ENGINE	TRANSMISSION
H = HIGHLINE L = LOWLINE P = PREMIUM	J = JEEP - 4WD T = JEEP - 2WD	49 = HATCHBACK TYPE #2 74 = SPORT UTILITY 4-DR TYPE #4	ED3 = 2.4L 4 Cyl DOHC 16V Dual VVT Engine	DD7 = 5-Speed Manual T355 Transmission DEF = 6-Speed Manual Aisin BG6 Trans DAV = Continuously Variable Transmission DAW = Cont.Var. w/Off-Rd Crawl Ratio Trans

AR = use ase required - = Non illustrrated part

Seat Belt - Front
Figure IMK-710

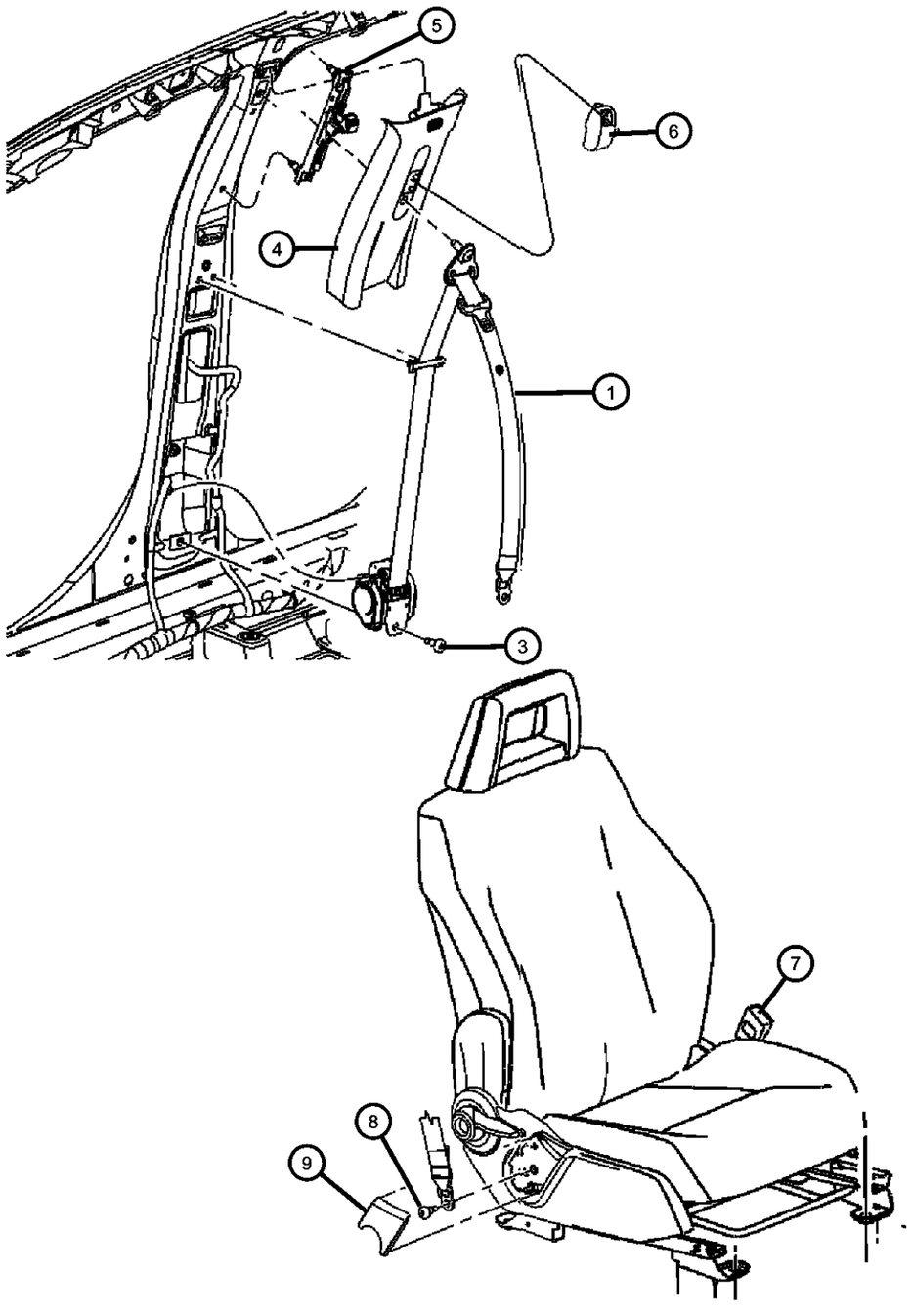

ITEM	PART NUMBER	QTY	LINE	SERIES	BODY	ENGINE	TRANS	TRIM	DESCRIPTION
1									SEAT BELT, Front Outer
	1BR841DVAA	1						*O0	[DA] , With [CG1] , without [ABB] or [ABD]
	1BR841K7AA	1						*O0	[KA] , With [CG1] , without [ABB] or [ABD]
	1BR851DVAA	1						*O0	[DA] , With [CG1] , without [ABB] or [ABD], Left
	1BR851K7AA	1						*O0	[KA] , With [CG1] , without [ABB] or [ABD], Left
	1BR871K7AA	1	J		49, 74			*O0	[KA] , With [CGJ], Left
	1BR881DVAA	1						*O0	[DA] , With [CGJ]
	1BR881K7AA	1						*O0	[KA] , With [CGJ]
	1BR891DVAA	1	T		49, 74			*O0	[DA] , With [CGJ], Left
	1BR891K7AA	1	T		49, 74			*O0	[KA] , With [CGJ], Left
	1BS031DVAA	1	J, T					*O0	[DA] , With [CG1] [ABB], Left
		1	J, T					*O0	[DA] , With [CG1] [ABD], Left
	1BS031K7AA	1	J, T					*O0	[KA] , With [CG1] [ABB], Left
	1BR871DVAA	1	J		49, 74			*O0	[DA] , With [CGJ], Left
	1BS041DVAA	1	J, T					*O0	[DA] , With [CG1] [ABB]
		1	J, T					*O0	[DA] , With [CG1] [ABD]
	1BS041K7AA	1	J, T					*O0	[KA] , With [CG1] [ABB], Right
		1	J, T					*O0	[KA] , With [CG1] [ABD], Right
	1BS061DVAB	1	U		49, 74			*O0	[DA] , With [CG1], Right
	1BS061KAAB	1	U		49, 74			*O0	[KA] , With [CG1], Right
	1BS091DVAB	1	U		49, 74			*O0	[DA] , With [CG1], Left
	1BS091KAAB	1	U		49, 74			*O0	[KA] , With [CG1], Left
		1	J, T					*O0	[KA] , With [CG1] [ABD], Left
-2									COVER, Seat Belt Retractor, Lower
	05291865AA	1	J, T, U		49, 74				Left
	05291866AA	1	J, T, U		49, 74				Right
3	06105123AA	2	J, T, U		49, 74				SCREW
4									COVER, Center Pillar
	0YF58DW1AB	1	J, T, U		49			*O0	[DA], Right
		1	J, T, U		49			*O0	[KA], Right
	0YF59DW1AB	1	J, T, U		49			*O0	[DA], Left

COMPASS/PATRIOT (MK)

SERIES	LINE	BODY	ENGINE	TRANSMISSION
H = HIGHLINE L = LOWLINE P = PREMIUM	J = JEEP - 4WD T = JEEP - 2WD	49 = HATCHBACK TYPE #2 74 = SPORT UTILITY 4-DR TYPE #4	ED3 = 2.4L 4 Cyl DOHC 16V Dual VVT Engine	DD7 = 5-Speed Manual T355 Transmission DEF = 6-Speed Manual Aisin BG6 Trans DAV = Continuously Variable Transmission DAW = Cont.Var. w/Off-Rd Crawl Ratio Trans

AR = use ase required - = Non illustrrated part

Seat Belt - Front
Figure IMK-710

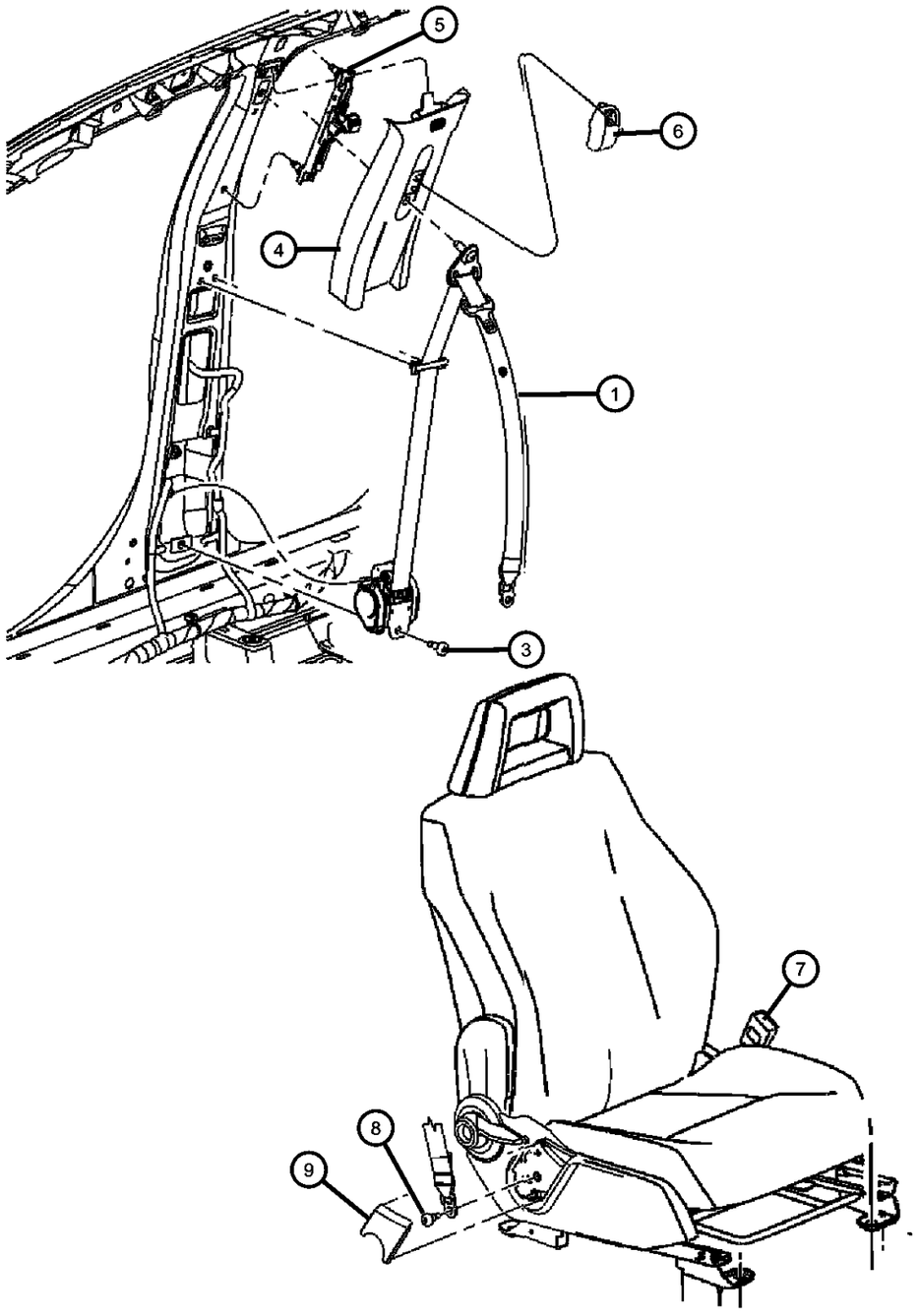

ITEM	PART NUMBER	QTY	LINE	SERIES	BODY	ENGINE	TRANS	TRIM	DESCRIPTION
		1	J, T, U		49			*O0	[KA], Left
	1AX74DW1AA	1	J, T, U		74			*O0	[DA], Right
		1	J, T, U		74			*O0	[KA], Right
	1AX75DW1AB	1	J, T, U		74			*O0	[DA], Left
	1ET04DW1AA	1	J, T, U		49			*O0	[DA] , With [CGS] or [CJ4], Right
		1	J, T, U		49			*O0	[KA] , With [CGS] or [CJ4], Right
	1ET05DW1AA	1	J, T, U		49			*O0	[DA] , With [CGS] or [CJ4], Left
		1	J, T, U		49			*O0	[KA] , With [CGS] or [CJ4], Left
	1EX68DW1AA	1	J, T, U		74			*O0	[DA] , With [CGS] or [CJ4], Right
	1AX75DW1AA	1	J, T, U		74			*O0	[KA], Left
	1EX69DW1AA	1	J, T, U		74			*O0	[DA] , With [CGS] or [CJ4], Left
		1	J, T, U		74			*O0	[KA] , With [CGS] or [CJ4], Left
		1	J, T, U		74			*O0	[KA] , With [CGS] or [CJ4], Right
5									ADJUSTER, Seat Belt Turning Loop
	0YV89DW1AC	2						*O0	[KA]
		2						*O0	[DA]
6									COVER, Turning Loop
	0YV87DW1AC	2						*O0	[DA]
		2						*O0	[KA]
7									SEAT BELT, Buckle Half
	0YV931DVAB	1						*AL	[DA]
		1						*D7	[DA]
	0YV931K7AB	1						*AL	[KA]
		1						*D7	[KA]
	1CW251DVAA	1						*D7	[DA] , 2 Way
		1						*AL	[DA] , 2 Way
	1CW251K7AA	1						*D7	[KA] , 2 Way
		1						*AL	[KA] , 2 Way
	1CY351DVAA	1	J					*D7	[DA] , 4 Way , Export
		1	U					*D7	[DA] , 4 Way , Export
		1	J					*AL	[DA] , 4 Way , Export
		1	U					*AL	[DA] , 4 Way , Export

COMPASS/PATRIOT (MK)

SERIES	LINE	BODY	ENGINE	TRANSMISSION
H = HIGHLINE L = LOWLINE P = PREMIUM	J = JEEP - 4WD T = JEEP - 2WD	49 = HATCHBACK TYPE #2 74 = SPORT UTILITY 4-DR TYPE #4	ED3 = 2.4L 4 Cyl DOHC 16V Dual VVT Engine	DD7 = 5-Speed Manual T355 Transmission DEF = 6-Speed Manual Aisin BG6 Trans DAV = Continuously Variable Transmission DAW = Cont.Var. w/Off-Rd Crawl Ratio Trans

Seat Belt - Front
Figure IMK-710

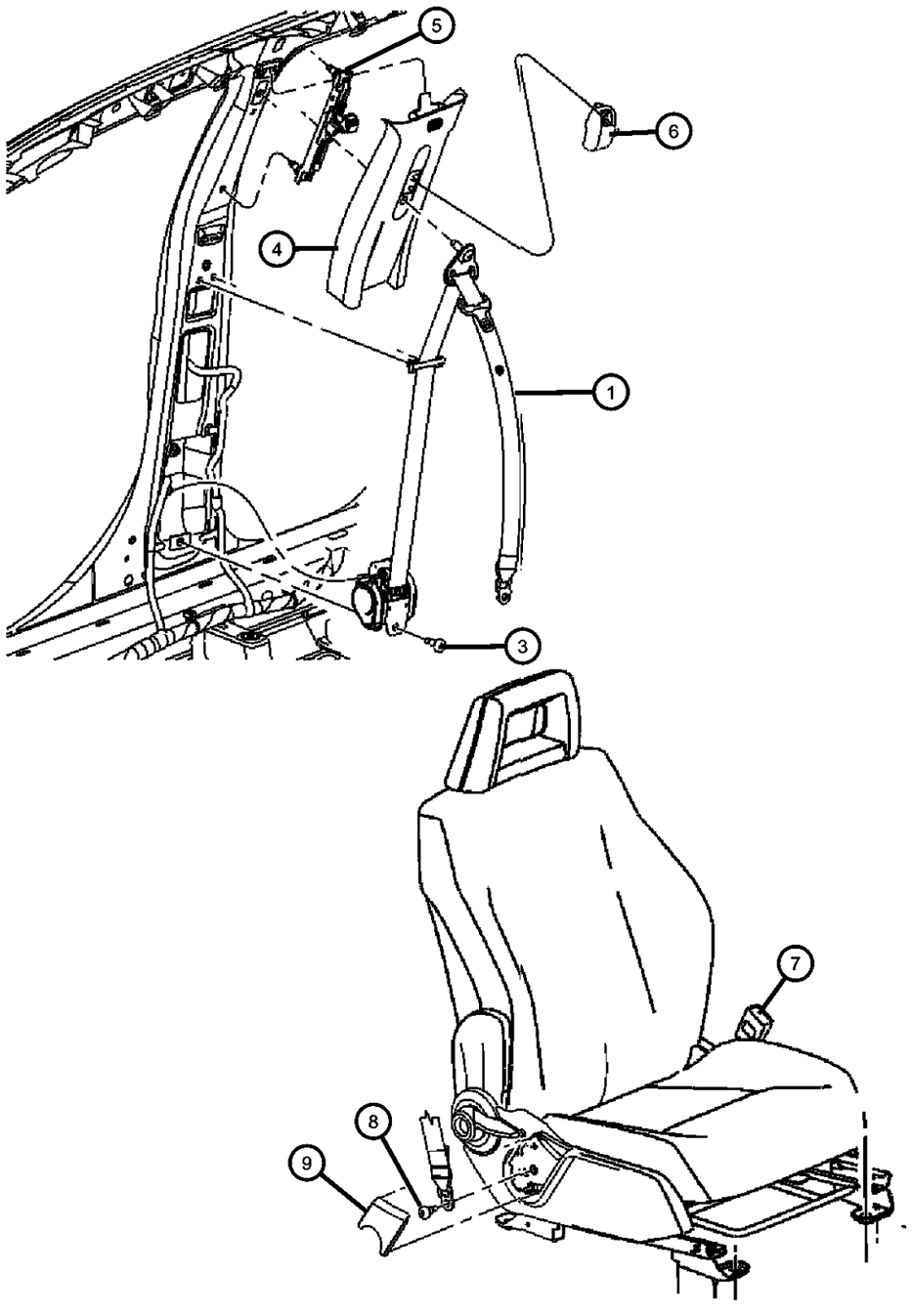

ITEM	PART NUMBER	QTY	LINE	SERIES	BODY	ENGINE	TRANS	TRIM	DESCRIPTION
	1CY351K7AA	1	U					*D7	[KA] , 4 Way , Export
		1	J					*AL	[KA] , 4 Way , Export
		1	U					*AL	[KA] , 4 Way , Export
		1	J					*D7	[KA] , 4 Way , Export
	1CY361DVAA	1	J					*D7	[DA] , 2 Way , Export
		1	U					*D7	[DA] , 2 Way , Export
		1	J					*AL	[DA] , 2 Way , Export
		1	U					*AL	[DA] , 2 Way , Export
	1CY361K7AA	1	J					*D7	[KA] , 2 Way , Export
		1	U					*D7	[KA] , 2 Way , Export
		1	J					*AL	[KA] , 2 Way , Export
		1	U					*AL	[KA] , 2 Way , Export
8	06105131AA	2	J		49				SCREW
9									COVER, Anchor
	1DQ421DAAA	1	U		49, 74			*E6	[DA]
		1	U		49, 74			*AL	[DA]
	1DQ421KAAA	1	U		49, 74			*E6	[KA]
		1	U		49, 74			*D7	[KA]
		1	U		49, 74			*AL	[KA]
	1DQ431DAAA	1	J, T		49, 74			*E6	[DA]
		1	J, T		49, 74			*D7	[DA]
		1	U		49, 74			*D7	[DA]
		1	J, T		49, 74			*AL	[DA]
	1DQ431KAAA	1	J, T		49, 74			*E6	[KA]
		1	J, T		49, 74			*AL	[KA]
		1	J, T		49, 74			*D7	[KA]
-10									EXTENDER, Seat Belt
	05179969AA	1	U		49, 74			*AL	
		1	U		49, 74			*D7	
		1	J, T		49, 74			*E6	
		1	J, T		49, 74			*AL	
		1	J, T		49, 74			*D7	

COMPASS/PATRIOT (MK)

SERIES	LINE	BODY	ENGINE	TRANSMISSION
H = HIGHLINE L = LOWLINE P = PREMIUM	J = JEEP - 4WD T = JEEP - 2WD	49 = HATCHBACK TYPE #2 74 = SPORT UTILITY 4-DR TYPE #4	ED3 = 2.4L 4 Cyl DOHC 16V Dual VVT Engine	DD7 = 5-Speed Manual T355 Transmission DEF = 6-Speed Manual Aisin BG6 Trans DAV = Continuously Variable Transmission DAW = Cont.Var. w/Off-Rd Crawl Ratio Trans

AR = use ase required - = Non illustrrated part

Seat Belt - Rear
Figure IMK-720

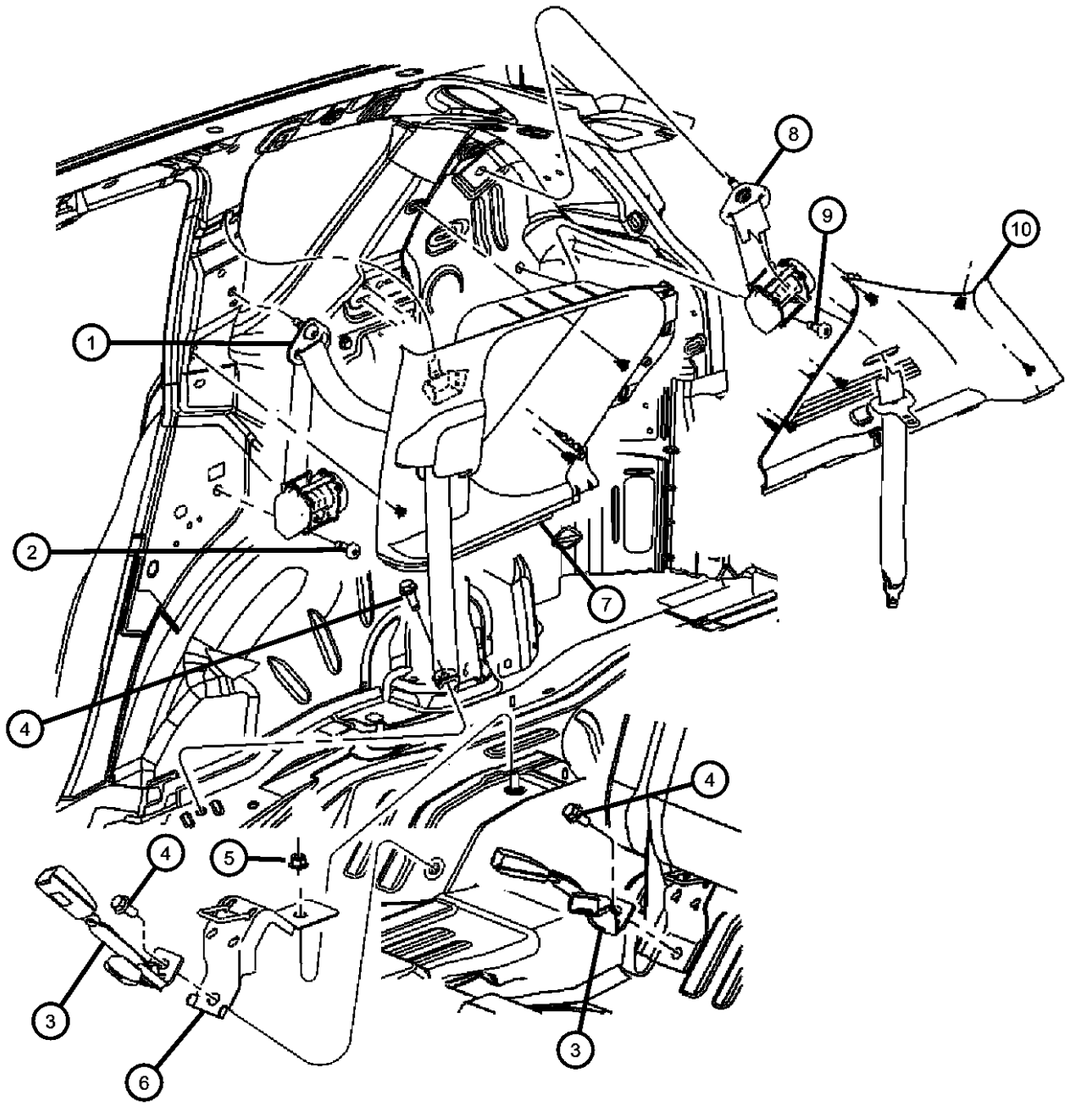

ITEM	PART NUMBER	QTY	LINE	SERIES	BODY	ENGINE	TRANS	TRIM	DESCRIPTION
1									SEAT BELT, Rear Outer
	0YD72DK7AC	1						*O0	[KA] , Without [CKG], Right
	0YD72XDVAC	1						*O0	[DA] , Without [CKG], Right
	0YD73DK7AC	1						*O0	[KA] , Without [CKG], Left
	0YD73XDVAC	1						*O0	[DA] , Without [CKG], Left
	0YX40DK7AC	1						*O0	[KA] , With [CKG], Right
	0YX40XDVAC	1						*O0	[DA] , With [CKG], Right
	0YX41DK7AC	1						*O0	[KA] , With [CKG], Left
	0YX41XDVAC	1						*O0	[DA] , With [CKG], Left
2	06105123AA	2	J, T, U		49, 74				SCREW
3									SEAT BELT, Rear Inner
	1GD221DVAA	1	J, T		49, 74			*O0	[DA], Right
	1GD221K7AA	1	J, T		49, 74			*O0	[KA], Right
	1GD231DVAA	1	J, T		49, 74			*O0	[DA], Left
	1GD231K7AA	1	J, T		49, 74			*O0	[KA], Left
4	06105074AA	1							SCREW
5	06502724	3							NUT, Hex Flange, M12x1.75
6	04645999AA	1	J, T, U		49, 74				BRACKET
7									PANEL, C Pillar
	0YF70DW1AB	1	J, T, U		49			*O0	[DA], Right
		1	J, T, U		49			*O0	[KA], Right
	0YF71DW1AB	1	J, T, U		49			*O0	[DA], Left
		1	J, T, U		49			*O0	[KA], Left
8									SEAT BELT, RR CNTR SHOULDER
	1AC86DK7AB	1	J, T		49			*O0	[KA] , Without [CGK]
	1AC86XDVAB	1	J, T		49			*O0	[DA] , Without [CGK]
	1AC87DK7AA	1						*O0	[KA] , With [CGK]
	1AC87XDVAA	1						*O0	[DA] , With [CGK]
	1DD58DK7AA	1	J, T		74			*O0	[KA] , Without [CGK]
	1DE64XDVAA	1	J, T, U		74			*O0	[DA] , With [CGK]
	1DD58XDVAA	1	J, T		74			*O0	[DA] , Without [CGK]
	1DE64DK7AA	1	J, T, U		74			*O0	[KA] , With [CGK]

COMPASS/PATRIOT (MK)

SERIES	LINE	BODY	ENGINE	TRANSMISSION
H = HIGHLINE L = LOWLINE P = PREMIUM	J = JEEP - 4WD T = JEEP - 2WD	49 = HATCHBACK TYPE #2 74 = SPORT UTILITY 4-DR TYPE #4	ED3 = 2.4L 4 Cyl DOHC 16V Dual VVT Engine	DD7 = 5-Speed Manual T355 Transmission DEF = 6-Speed Manual Aisin BG6 Trans DAV = Continuously Variable Transmission DAW = Cont.Var. w/Off-Rd Crawl Ratio Trans

AR = use ase required - = Non illustrrated part

Seat Belt - Rear
Figure IMK-720

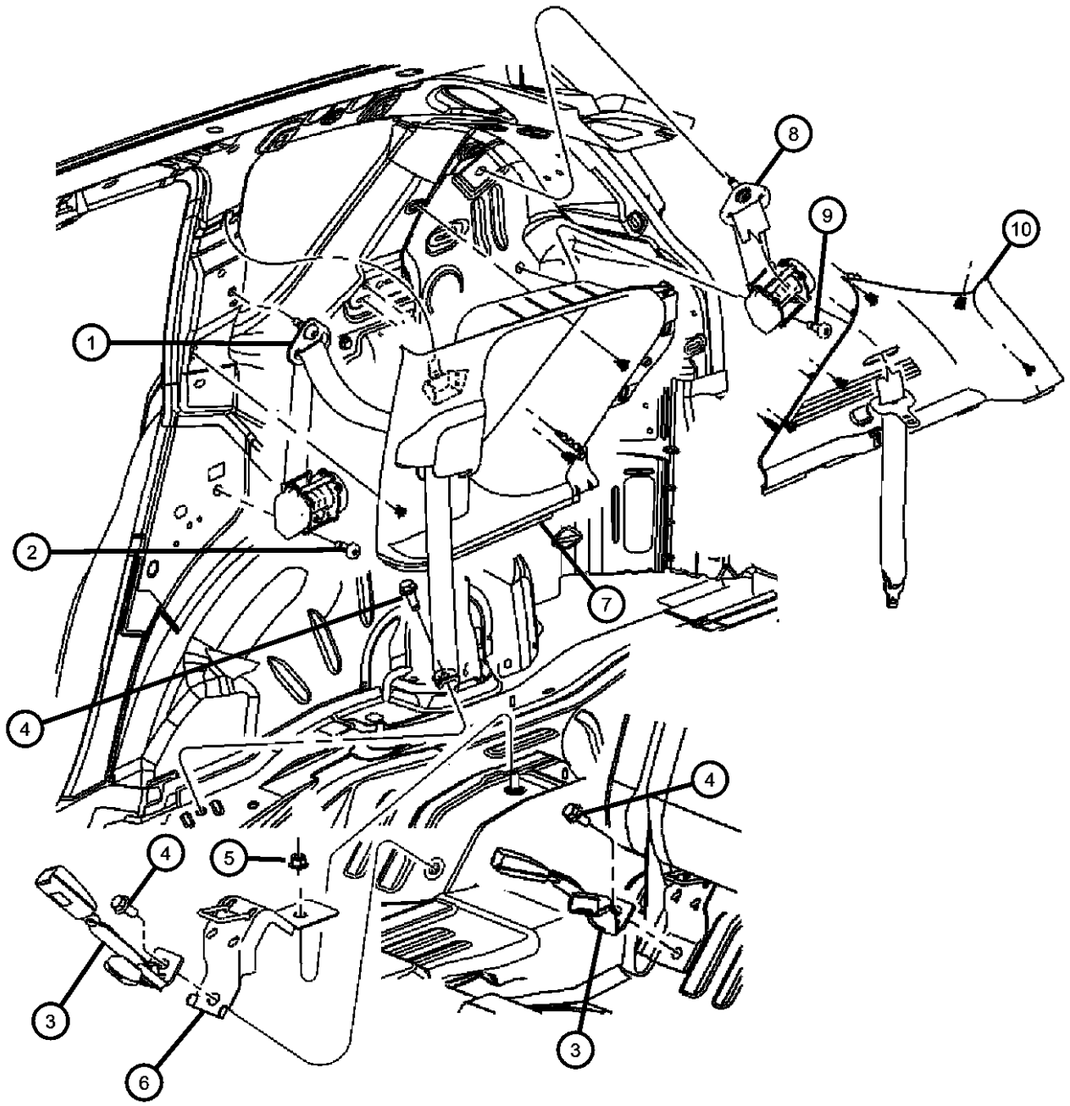

ITEM	PART NUMBER	QTY	LINE	SERIES	BODY	ENGINE	TRANS	TRIM	DESCRIPTION
9	06105123AA	2	J, T, U		49, 74				SCREW
10									PANEL, D Pillar
	0YE52DW1AC	1	J, T, U		49			*O0	[DA], Right
		1	J, T, U		49			*O0	[KA], Right
	0YE53DW1AC	1	J, T, U		49			*O0	[DA], Left
		1	J, T, U		49			*O0	[KA], Left

COMPASS/PATRIOT (MK)

SERIES	LINE	BODY	ENGINE	TRANSMISSION
H = HIGHLINE L = LOWLINE P = PREMIUM	J = JEEP - 4WD T = JEEP - 2WD	49 = HATCHBACK TYPE #2 74 = SPORT UTILITY 4-DR TYPE #4	ED3 = 2.4L 4 Cyl DOHC 16V Dual VVT Engine	DD7 = 5-Speed Manual T355 Transmission DEF = 6-Speed Manual Aisin BG6 Trans DAV = Continuously Variable Transmission DAW = Cont.Var. w/Off-Rd Crawl Ratio Trans

Attaching Parts, Drivers Seat
Figure IMK-810

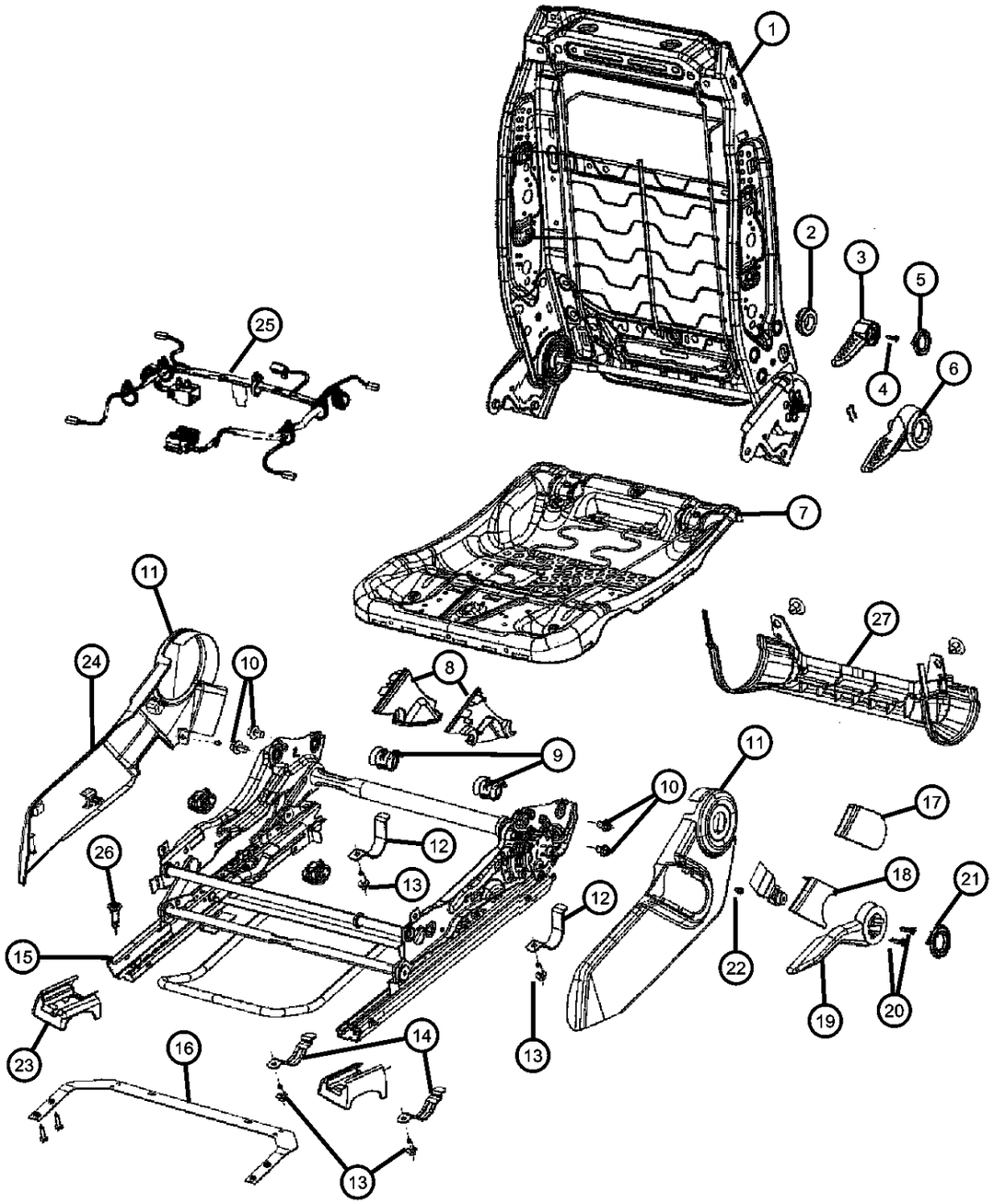

ITEM	PART NUMBER	QTY	LINE	SERIES	BODY	ENGINE	TRANS	TRIM	DESCRIPTION
1									FRAME, Front Seat Back
	05183307AA	1	U		49, 74			*E6	Fold Flat
		1	U		49, 74			*D7	Fold Flat
		1	U		49, 74			*AL	Fold Flat
	05183308AA	1	J, T		49, 74			*E6	
		1	U		49, 74			*E6	
		1	J, T		49, 74			*D7	
		1	U		49, 74			*D7	
		1	J, T		74			*K6	
	05183310AA	1	J, T		49, 74			*AL	
2									GROMMET, 4 Way
	1DR061D5AA	1	J, T		49			*K6	[DA]
	1DR061DAAA	1	J, T		49, 74			*AL	[DA]
	1DR061K2AA	1	J, T		74			*K6	[KA]
	1DR061KAAA	1	J, T		49, 74			*AL	[KA]
3									HANDLE, Lumbar, 4 Way
	1DQ641DAAA	1	U		49, 74			*AL	[DA]
		1	J, T		49, 74			*AL	[DA]
		1	J, T		74			*K6	[DA]
		1	J, T		49			*K6	[DA]
	1DQ641K2AA	1	J, T		49			*K6	[KA]
	1DQ641KAAA	1	J, T		49, 74			*AL	[KA]
		1	U		49, 74			*AL	[KA]
		1	J, T		74			*K6	[KA]
4	68001600AA	1	J, T, U		49, 74				BUSHING
5									CAP, 4 Way
	1DQ661DAAA	1	J, T		49, 74			*AL	[DA]
		1	U		49, 74			*AL	[DA]
	1DQ661KAAA	1	U		49, 74			*AL	[KA]
		1	J, T		49, 74			*AL	[KA]
6									HANDLE, Recliner, 2 Way
	1DQ581DAAA	1	U		49, 74			*D7	[DA], Right
		1	J, T		49, 74			*D7	[DA], Right

COMPASS/PATRIOT (MK)

SERIES	LINE	BODY	ENGINE	TRANSMISSION
H = HIGHLINE L = LOWLINE P = PREMIUM	J = JEEP - 4WD T = JEEP - 2WD	49 = HATCHBACK TYPE #2 74 = SPORT UTILITY 4-DR TYPE #4	ED3 = 2.4L 4 Cyl DOHC 16V Dual VVT Engine	DD7 = 5-Speed Manual T355 Transmission DEF = 6-Speed Manual Aisin BG6 Trans DAV = Continuously Variable Transmission DAW = Cont.Var. w/Off-Rd Crawl Ratio Trans

Attaching Parts, Drivers Seat
Figure IMK-810

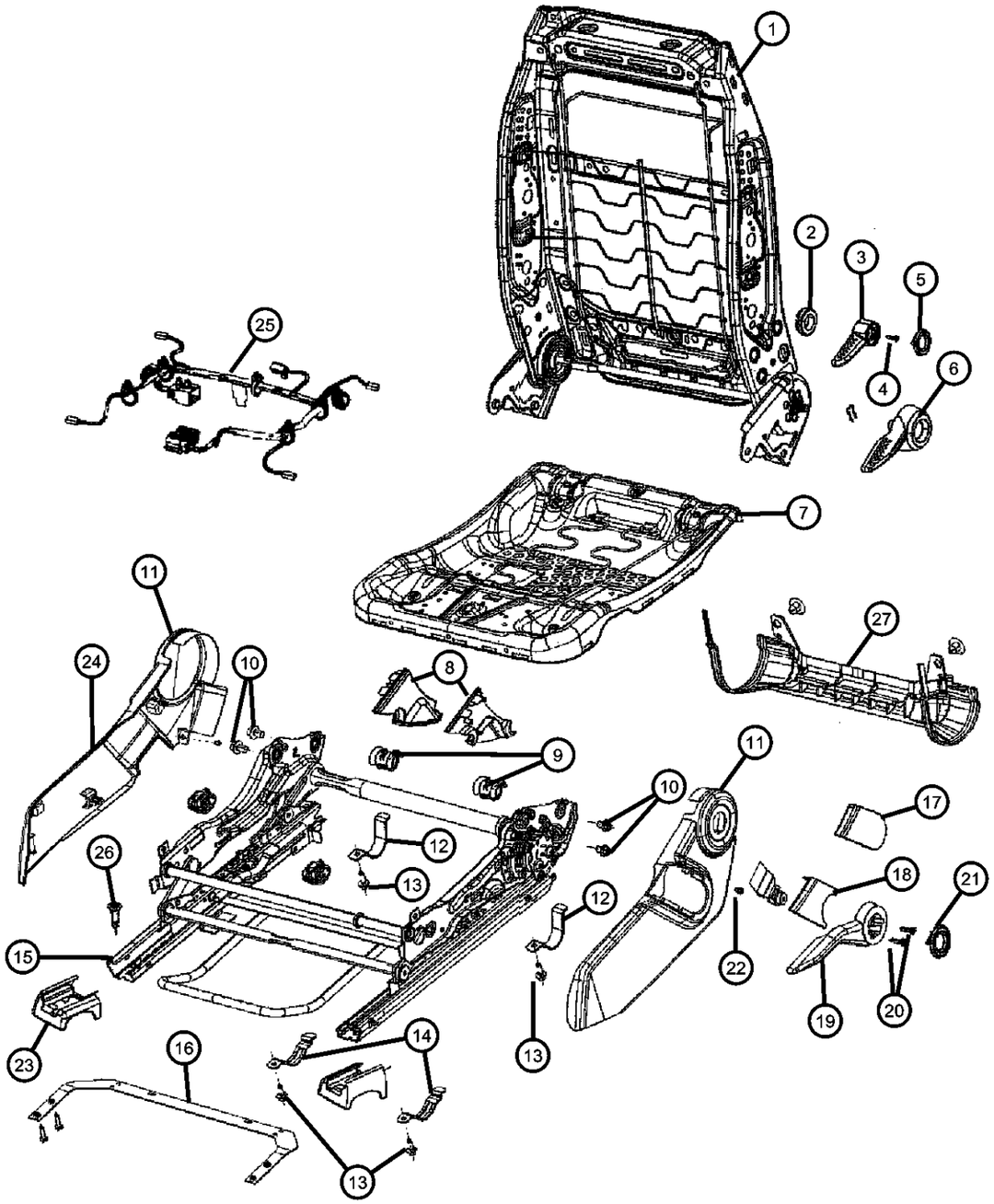

ITEM	PART NUMBER	QTY	LINE	SERIES	BODY	ENGINE	TRANS	TRIM	DESCRIPTION
		1	J, T		49, 74			*E6	[DA], Right
		1	U		49, 74			*E6	[DA], Right
		1	U		49, 74			*AL	[DA], Right
	1DQ581KAAA	1	U		49, 74			*E6	[KA], Right
		1	U		49, 74			*D7	[KA], Right
		1	J, T		49, 74			*E6	[KA], Right
		1	J, T		49, 74			*D7	[KA], Right
		1	U		49, 74			*AL	[KA], Right
	1DQ591DAAA	1	U		49, 74			*E6	[DA], Left
		1	J, T		49, 74			*D7	[DA], Left
		1	U		49, 74			*D7	[DA], Left
		1	J, T		49, 74			*E6	[DA], Left
		1	J, T		49, 74			*AL	[DA], Left
	1DQ591KAAA	1	J, T		49, 74			*E6	[KA], Left
		1	U		49, 74			*E6	[KA], Left
		1	J, T		49, 74			*D7	[KA], Left
		1	U		49, 74			*D7	[KA], Left
		1	J, T		49, 74			*AL	[KA], Left
	1DQ601DAAA	1	J, T		49, 74			*E6	[DA] , Fold Flat, Right
		1	J, T		49, 74			*D7	[DA] , Fold Flat, Right
		1	J, T		49, 74			*AL	[DA] , Fold Flat, Right
	1DQ601KAAA	1	J, T		49, 74			*D7	[KA] , Fold Flat, Right
		1	J, T		49, 74			*AL	[KA] , Fold Flat, Right
		1	J, T		49, 74			*E6	[KA] , Fold Flat, Right
	1DQ611DAAA	1	U		49, 74			*E6	[DA] , Fold Flat, Left
		1	U		49, 74			*D7	[DA] , Fold Flat, Left
		1	U		49, 74			*AL	[DA] , Fold Flat, Left
	1DQ611KAAA	1	U		49, 74			*E6	[KA] , Fold Flat, Left
		1	U		49, 74			*D7	[KA] , Fold Flat, Left
		1	U		49, 74			*AL	[KA] , Fold Flat, Left
7									FRAME, Seat cushion
	05183324AA	2	J, T		49, 74			*E6	

COMPASS/PATRIOT (MK)

SERIES	LINE	BODY	ENGINE	TRANSMISSION
H = HIGHLINE L = LOWLINE P = PREMIUM	J = JEEP - 4WD T = JEEP - 2WD	49 = HATCHBACK TYPE #2 74 = SPORT UTILITY 4-DR TYPE #4	ED3 = 2.4L 4 Cyl DOHC 16V Dual VVT Engine	DD7 = 5-Speed Manual T355 Transmission DEF = 6-Speed Manual Aisin BG6 Trans DAV = Continuously Variable Transmission DAW = Cont.Var. w/Off-Rd Crawl Ratio Trans

Attaching Parts, Drivers Seat
Figure IMK-810

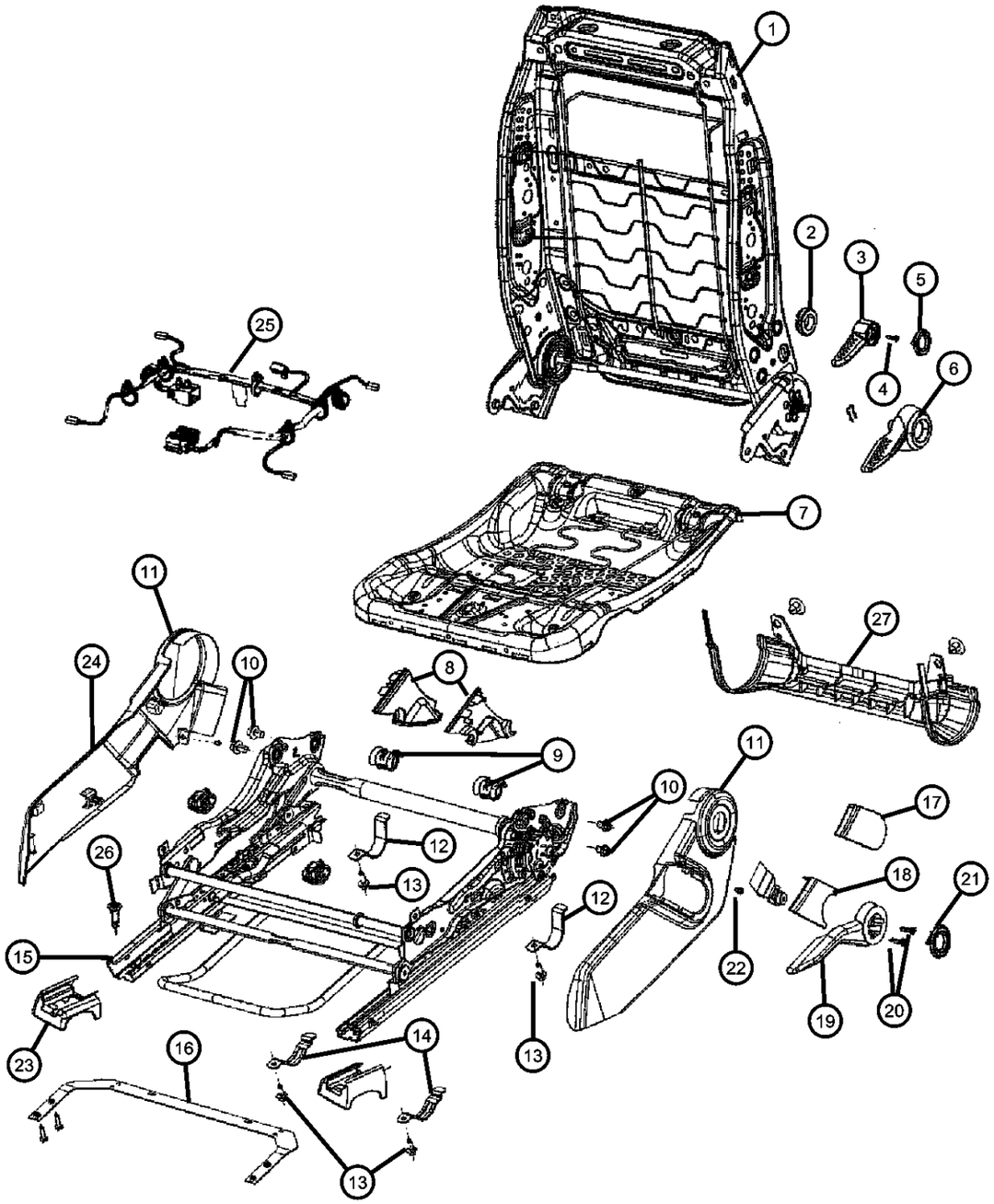

ITEM	PART NUMBER	QTY	LINE	SERIES	BODY	ENGINE	TRANS	TRIM	DESCRIPTION
		2	U		49, 74			*E6	
		2	U		49, 74			*D7	
		2	U		49, 74			*AL	
		2	J, T		49, 74			*AL	
		2	J, T		49, 74			*D7	
8									FLANGE, Return
	1DQ821DAAA	1	J, T		49, 74			*E6	[DA], Right
		1	U		49, 74			*D7	[DA], Right
		1	J, T		49, 74			*AL	[DA], Right
		1	U		49, 74			*AL	[DA], Right
		1	J, T		49, 74			*D7	[DA], Right
	1DQ821KAAA	1	J, T		49, 74			*E6	[KA], Right
		2	J, T		49, 74			*D7	[KA], Right
		2	U		49, 74			*D7	[KA], Right
		1	U		49, 74			*E6	[KA], Right
		1	J, T		49, 74			*AL	[KA], Right
		1	U		49, 74			*AL	[KA], Right
	1DQ831DAAA	1	J, T		49, 74			*E6	[DA], Left
		2	J, T		49, 74			*D7	[DA], Left
		2	U		49, 74			*D7	[DA], Left
		1	U		49, 74			*AL	[DA], Left
		1	J, T		49, 74			*AL	[DA], Left
	1DQ831KAAA	1	U		49, 74			*E6	[KA], Left
		1	J, T		49, 74			*E6	[KA], Left
		1	U		49, 74			*AL	[KA], Left
		1	J, T		49, 74			*AL	[KA], Left
		1	J, T		49, 74			*D7	[KA], Left
		1	U		49, 74			*D7	[KA], Left
9									BRACKET
	05183369AA	4	U		49, 74			*E6	Rear
		4	J, T		49, 74			*E6	Rear
		4	J, T		49, 74			*D7	Rear

COMPASS/PATRIOT (MK)

SERIES	LINE	BODY	ENGINE	TRANSMISSION
H = HIGHLINE L = LOWLINE P = PREMIUM	J = JEEP - 4WD T = JEEP - 2WD	49 = HATCHBACK TYPE #2 74 = SPORT UTILITY 4-DR TYPE #4	ED3 = 2.4L 4 Cyl DOHC 16V Dual VVT Engine	DD7 = 5-Speed Manual T355 Transmission DEF = 6-Speed Manual Aisin BG6 Trans DAV = Continuously Variable Transmission DAW = Cont.Var. w/Off-Rd Crawl Ratio Trans

Attaching Parts, Drivers Seat
Figure IMK-810

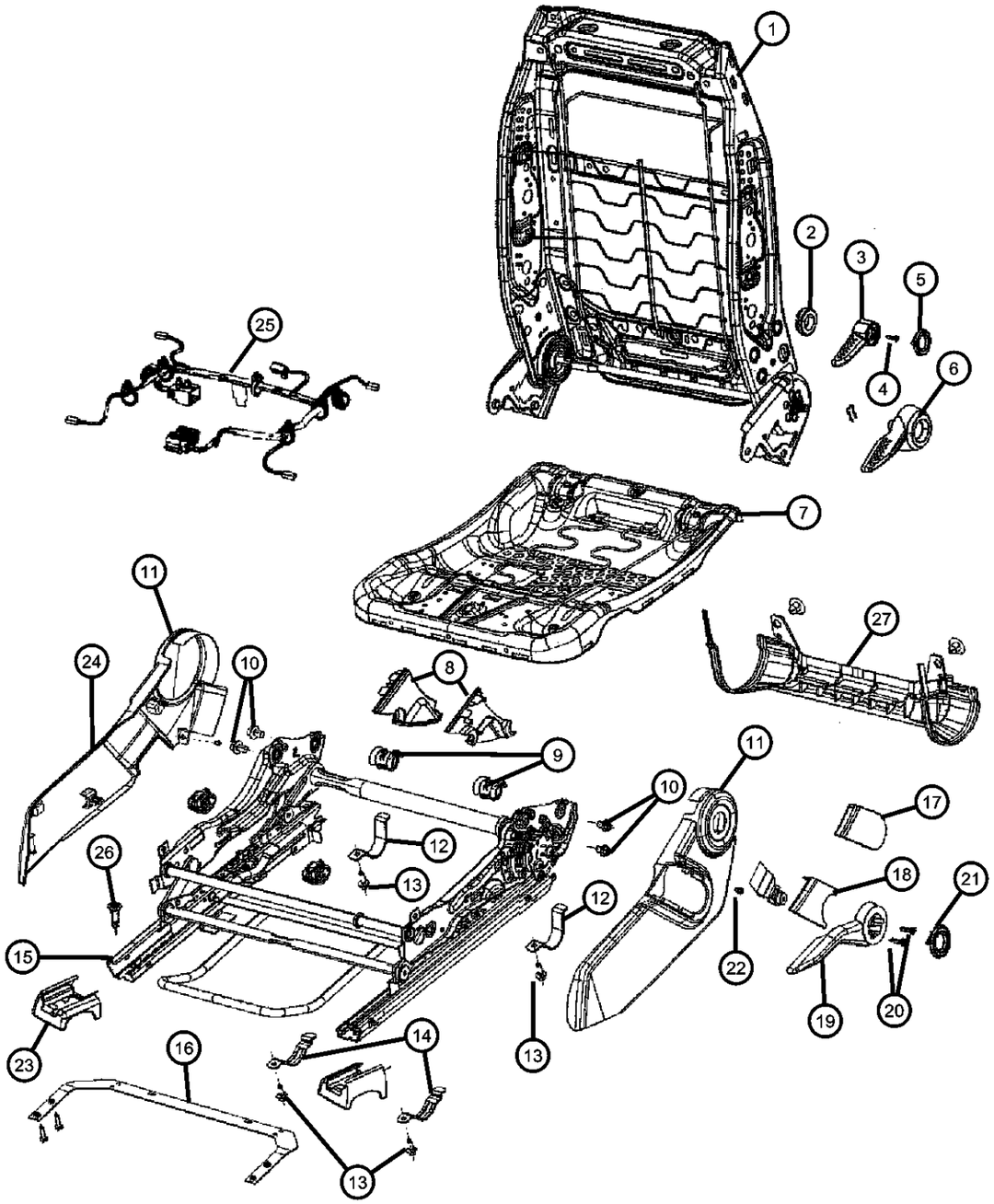

ITEM	PART NUMBER	QTY	LINE	SERIES	BODY	ENGINE	TRANS	TRIM	DESCRIPTION
		4	U		49, 74			*D7	Rear
		4	J, T		49, 74			*AL	Rear
		4	U		49, 74			*AL	Rear
	05183370AA	4	J, T		49, 74			*E6	Front
		4	U		49, 74			*E6	Front
		4	J, T		49, 74			*D7	Front
		4	U		49, 74			*D7	Front
		4	J, T		49, 74			*AL	Front
		4	U		49, 74			*AL	Front
10	06104264AA	2							SCREW, Hex Head
11									SHIELD SIDE, Seat
	1DQ311DAAA	1	U		49, 74			*E6	[DA] , 2 Way , Fold Flat, Outboard
		1	U		49, 74			*D7	[DA] , 2 Way , Fold Flat, Outboard
		1	U		49, 74			*AL	[DA] , 2 Way , Fold Flat, Outboard
	1DQ311KAAA	1	U		49, 74			*E6	[KA] , 2 Way , Fold Flat, Outboard
		1	U		49, 74			*D7	[KA] , 2 Way , Fold Flat, Outboard
		1	U		49, 74			*AL	[KA] , 2 Way , Fold Flat, Outboard
	1DQ331DAAA	1	J, T		49, 74			*E6	[DA] , 2 Way, Outboard
		1	U		49, 74			*E6	[DA] , 2 Way, Outboard
		1	J, T		49, 74			*D7	[DA] , 2 Way, Outboard
		1	U		49, 74			*D7	[DA] , 2 Way, Outboard
	1DQ331KAAA	1	J, T		49, 74			*E6	[KA] , 2 Way, Outboard
		1	U		49, 74			*E6	[KA] , 2 Way, Outboard
		1	J, T		49, 74			*D7	[KA] , 2 Way, Outboard
		1	U		49, 74			*D7	[KA] , 2 Way, Outboard
	1DQ351DAAA	1	J, T		49, 74			*D7	[DA], Outboard
		1	J, T		49, 74			*E6	[DA], Outboard
		1	J, T		49, 74			*AL	[DA], Outboard
	1DQ351KAAA	1	J, T		49, 74			*E6	[KA], Outboard
		1	J, T		49, 74			*D7	[KA], Outboard
		1	J		49, 74			*AL	[KA], Outboard
	1DQ451DAAA	1	J, T		49, 74			*E6	[DA] , 2 Way, Inboard

COMPASS/PATRIOT (MK)

SERIES	LINE	BODY	ENGINE	TRANSMISSION
H = HIGHLINE L = LOWLINE P = PREMIUM	J = JEEP - 4WD T = JEEP - 2WD	49 = HATCHBACK TYPE #2 74 = SPORT UTILITY 4-DR TYPE #4	ED3 = 2.4L 4 Cyl DOHC 16V Dual VVT Engine	DD7 = 5-Speed Manual T355 Transmission DEF = 6-Speed Manual Aisin BG6 Trans DAV = Continuously Variable Transmission DAW = Cont.Var. w/Off-Rd Crawl Ratio Trans

AR = use ase required - = Non illustrrated part

Attaching Parts, Drivers Seat
Figure IMK-810

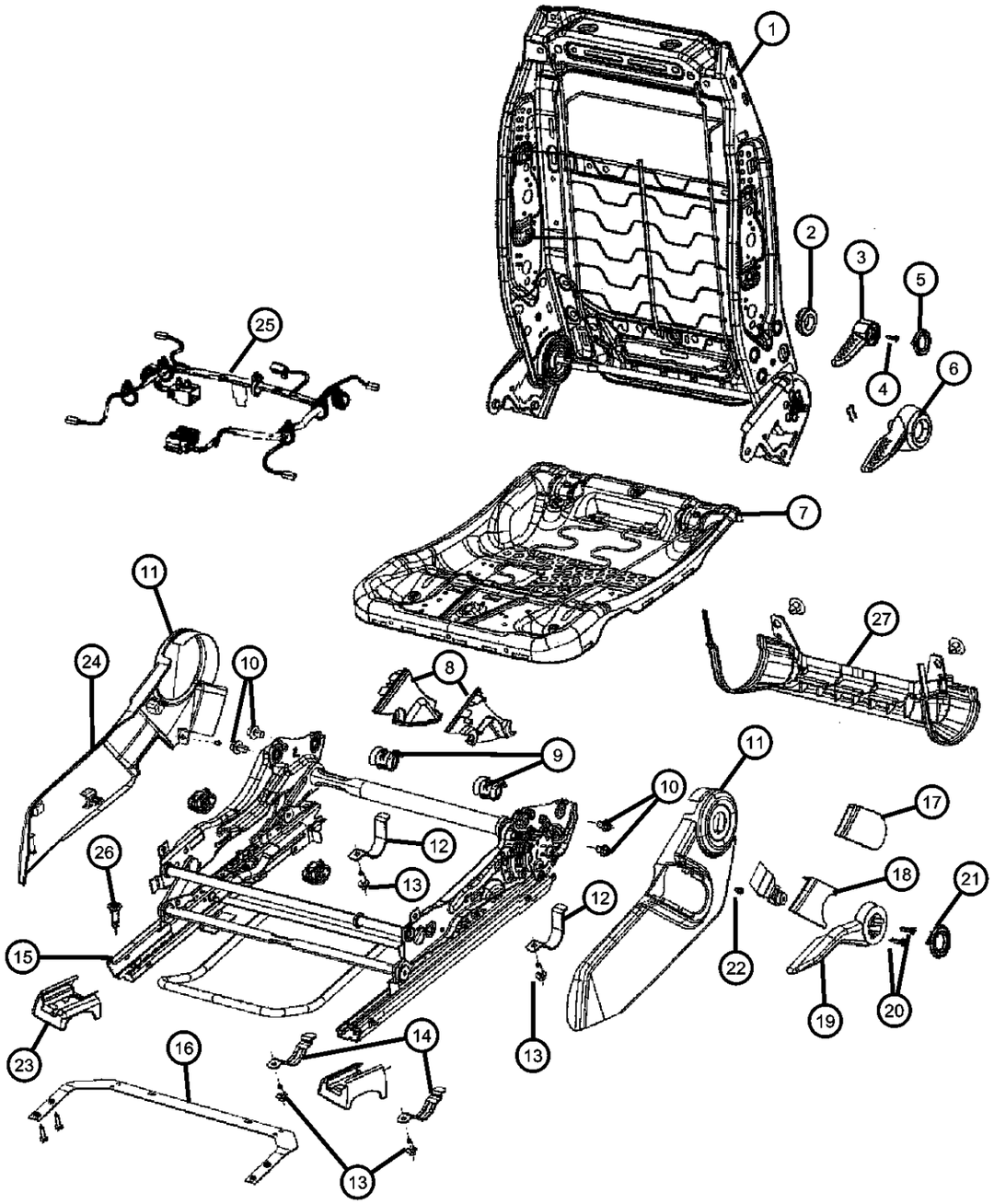

ITEM	PART NUMBER	QTY	LINE	SERIES	BODY	ENGINE	TRANS	TRIM	DESCRIPTION
		1	J		49			*D7	[DA] , 2 Way, Inboard
	1DQ451KAAA	1	J, T		49, 74			*E6	[KA] , 2 Way, Inboard
		1	J		49			*D7	[KA] , 2 Way, Inboard
	1ER871DAAA	1	J, T		49, 74			*E6	[DA], Inboard
		1	J, T		49, 74			*D7	[DA], Inboard
	1ER871KAAA	1	J, T		49, 74			*E6	[KA], Inboard
		1	J, T		49, 74			*D7	[KA], Inboard
		1	J, T		49, 74			*AL	[KA], Inboard
12									CLAMP
	05183371AA	4	J, T		49, 74			*D7	
		4	U		49, 74			*D7	
		4	J, T		49, 74			*E6	
		4	U		49, 74			*E6	
		4	U		49, 74			*AL	
		4	J, T		49, 74			*AL	
13									SCREW
	05183368AA	8	J, T		49, 74			*E6	
		8	J, T		49, 74			*D7	
		8	J, T		49, 74			*AL	
14									CLAMP
	05183372AA	4	J, T		49, 74			*E6	
		4	J, T		49, 74			*D7	
		4	U		49, 74			*D7	
		4	U		49, 74			*E6	
		4	J, T		49, 74			*AL	
		4	U		49, 74			*AL	
15									ADJUSTER, Manual Seat
	04610173AA	1	J, T		49			*D7	[CDW,CDH,CAX]
		1	J, T		74			*D7	[CDW,CDH,CAX]
	68001651AA	1	J, T		49, 74			*D7	
		1	J, T		49, 74			*E6	
		1	J, T		49, 74			*AL	

COMPASS/PATRIOT (MK)

SERIES	LINE	BODY	ENGINE	TRANSMISSION
H = HIGHLINE L = LOWLINE P = PREMIUM	J = JEEP - 4WD T = JEEP - 2WD	49 = HATCHBACK TYPE #2 74 = SPORT UTILITY 4-DR TYPE #4	ED3 = 2.4L 4 Cyl DOHC 16V Dual VVT Engine	DD7 = 5-Speed Manual T355 Transmission DEF = 6-Speed Manual Aisin BG6 Trans DAV = Continuously Variable Transmission DAW = Cont.Var. w/Off-Rd Crawl Ratio Trans

Attaching Parts, Drivers Seat
Figure IMK-810

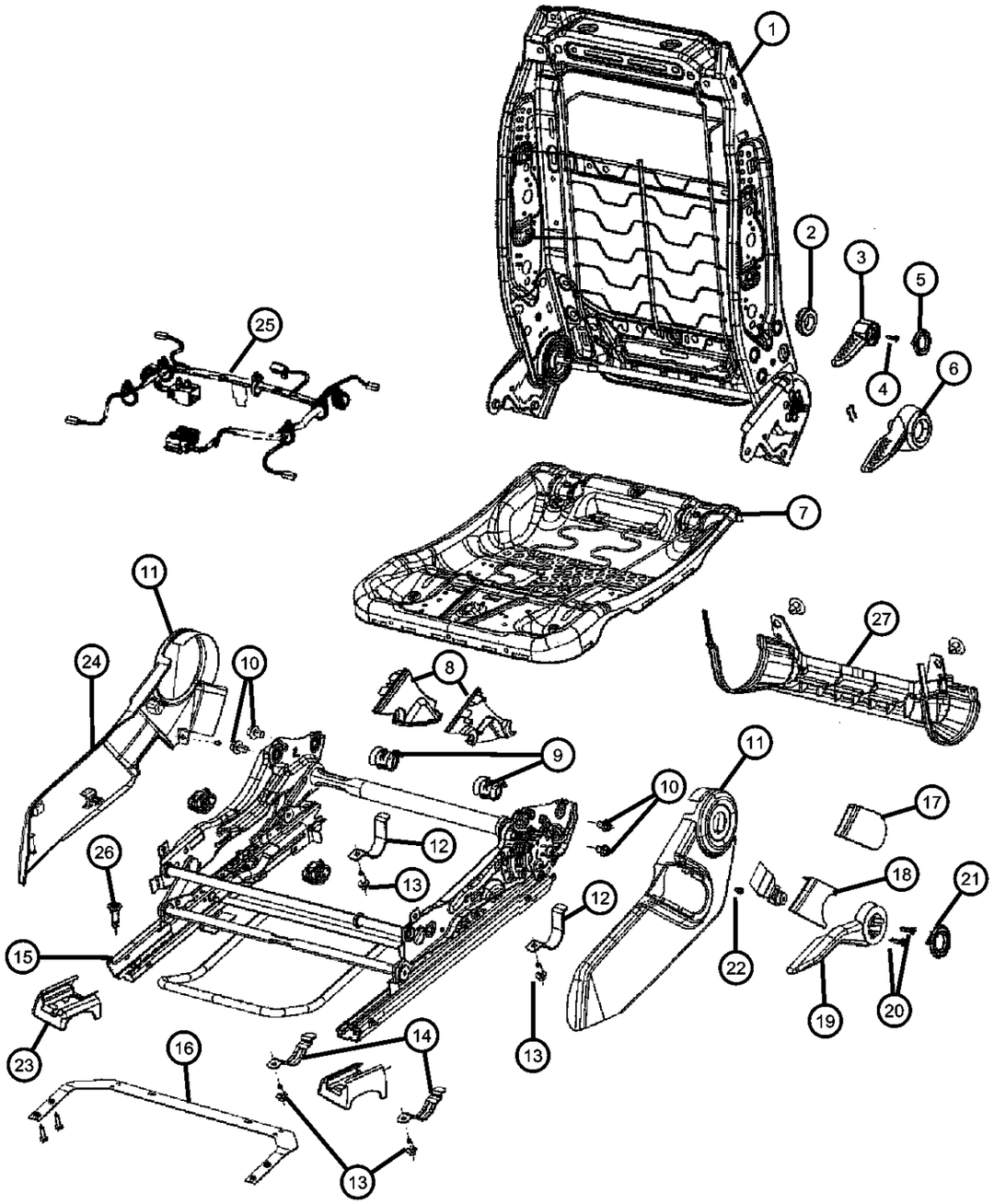

ITEM	PART NUMBER	QTY	LINE	SERIES	BODY	ENGINE	TRANS	TRIM	DESCRIPTION
16									BRACE, Seat Track
	05191920AA	2	J, T		49, 74			*E6	
		1	U		49, 74			*E6	
		2	J, T		49, 74			*D7	
		1	U		49, 74			*D7	
		2	U		49, 74			*AL	
		2	J, T		49, 74			*AL	
17									COVER, Anchor, 2 Way
	1DQ371DAAA	1	U		49, 74			*E6	[DA]
		1	U		49, 74			*AL	[DA]
		1	J, T		49, 74			*D7	[DA]
	1DQ371KAAA	1	J, T		49, 74			*E6	[KA]
		1	J, T		49, 74			*D7	[KA]
		1	U		49, 74			*AL	[KA]
18									COVER, Anchor, 4 Way
	1DQ431DAAA	1	J, T		49, 74			*AL	[DA]
		1	J, T		49, 74			*E6	[DA]
		1	J, T		49, 74			*D7	[DA]
	1DQ431KAAA	1	J, T		49, 74			*E6	[KA]
		1	J, T		49, 74			*D7	[KA]
		1	J, T		49, 74			*AL	[KA]
19									HANDLE, Seat Lift, 4 Way
	1DQ621DAAA	1	U		49, 74			*E6	[DA], Right
		1	U		49, 74			*D7	[DA], Right
		1	U		49, 74			*AL	[DA], Right
	1DQ621KAAA	1	U		49, 74			*E6	[KA], Right
		1	U		49, 74			*D7	[KA], Right
		1	U		49, 74			*AL	[KA], Right
	1DQ631DAAA	1	J, T		49, 74			*D7	[DA], Left
		1	J, T		49, 74			*AL	[DA], Left
		1	J, T		49, 74			*E6	[DA], Left
	1DQ631KAAA	1	J, T		49, 74			*AL	[KA], Left

COMPASS/PATRIOT (MK)

SERIES	LINE	BODY	ENGINE	TRANSMISSION
H = HIGHLINE L = LOWLINE P = PREMIUM	J = JEEP - 4WD T = JEEP - 2WD	49 = HATCHBACK TYPE #2 74 = SPORT UTILITY 4-DR TYPE #4	ED3 = 2.4L 4 Cyl DOHC 16V Dual VVT Engine	DD7 = 5-Speed Manual T355 Transmission DEF = 6-Speed Manual Aisin BG6 Trans DAV = Continuously Variable Transmission DAW = Cont.Var. w/Off-Rd Crawl Ratio Trans

Attaching Parts, Drivers Seat
Figure IMK-810

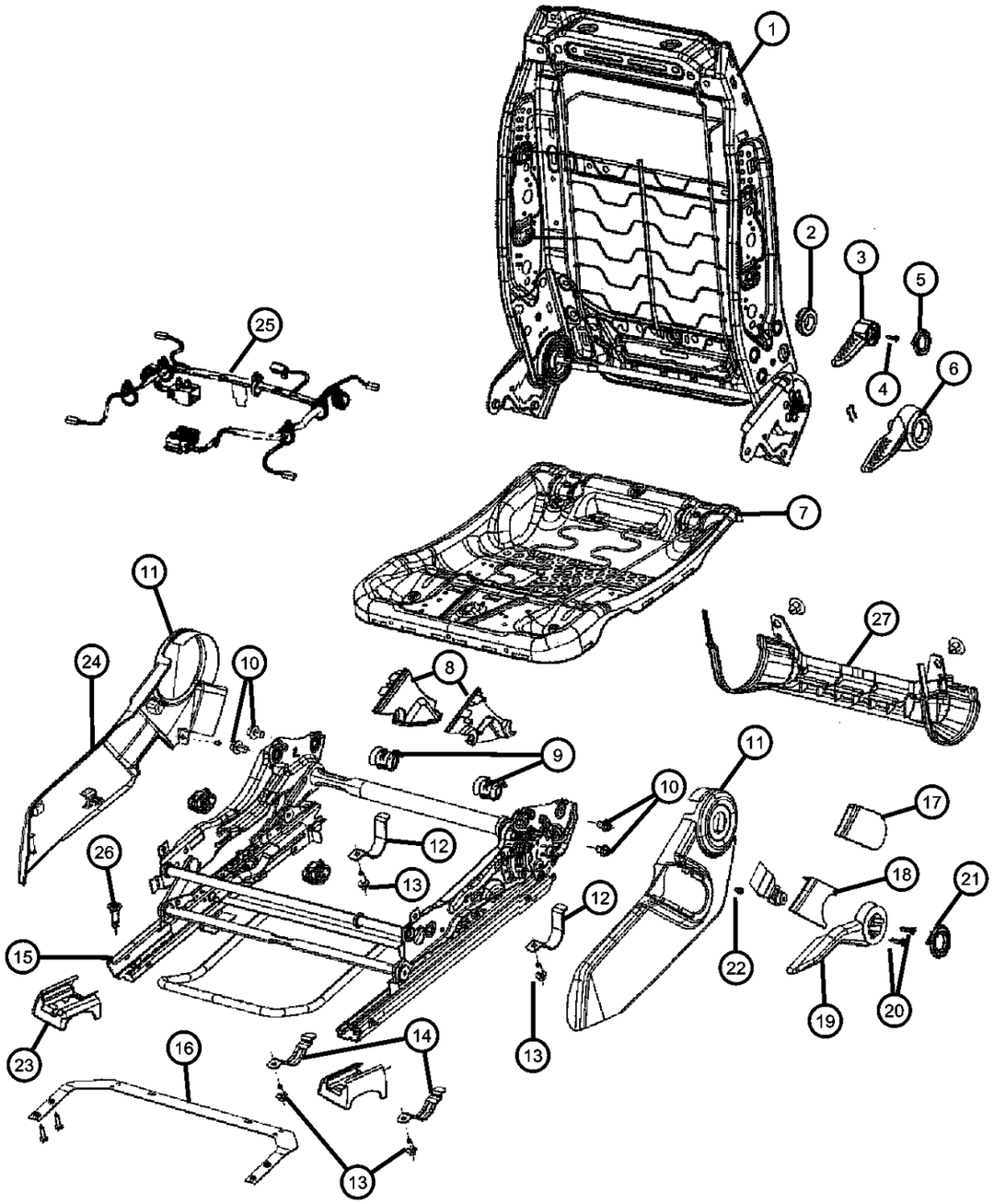

ITEM	PART NUMBER	QTY	LINE	SERIES	BODY	ENGINE	TRANS	TRIM	DESCRIPTION
		1	J, T		49, 74			*E6	[KA], Left
		1	J, T		49, 74			*D7	[KA], Left
20									SCREW, 4 Way
	05183367AA	1	J, T		49, 74			*E6	
		3	J, T		49, 74			*AL	
		1	U		49, 74			*E6	
		1	J, T		49, 74			*D7	
		2	U		74, 49			*D7	
		2	J		49, 74			*AL	
21									CAP, 4 Way
	1DQ651DAAA	1	U		49, 74			*D7	[DA]
		1	U		49, 74			*AL	[DA]
		1	J, T		49, 74			*E6	[DA]
		1	U		49, 74			*E6	[DA]
		1	J, T		49, 74			*D7	[DA]
		1	J, T		49, 74			*AL	[DA]
	1DQ651KAAA	1	J, T		74, 49			*D7	[KA]
		1	U		49, 74			*D7	[KA]
		1	J, T		49, 74			*E6	[KA]
		1	U		49, 74			*E6	[KA]
		1	U		49, 74			*AL	[KA]
		1	J, T		49, 74			*AL	[KA]
22									BOLT
	05139634AA	2	J, T		49, 74			*E6	
		2	U		49, 74			*E6	
		2	U		49, 74			*AL	
		2	J, T		49, 74			*AL	
		2	U		49, 74			*D7	
		2	J, T		49, 74			*D7	
23									COVER, Track
	05191912AA	1	J, T		49, 74			*AL	Right
		1	J, T		49, 74			*D7	Right

COMPASS/PATRIOT (MK)

SERIES	LINE	BODY	ENGINE	TRANSMISSION
H = HIGHLINE L = LOWLINE P = PREMIUM	J = JEEP - 4WD T = JEEP - 2WD	49 = HATCHBACK TYPE #2 74 = SPORT UTILITY 4-DR TYPE #4	ED3 = 2.4L 4 Cyl DOHC 16V Dual VVT Engine	DD7 = 5-Speed Manual T355 Transmission DEF = 6-Speed Manual Aisin BG6 Trans DAV = Continuously Variable Transmission DAW = Cont.Var. w/Off-Rd Crawl Ratio Trans

Attaching Parts, Drivers Seat
Figure IMK-810

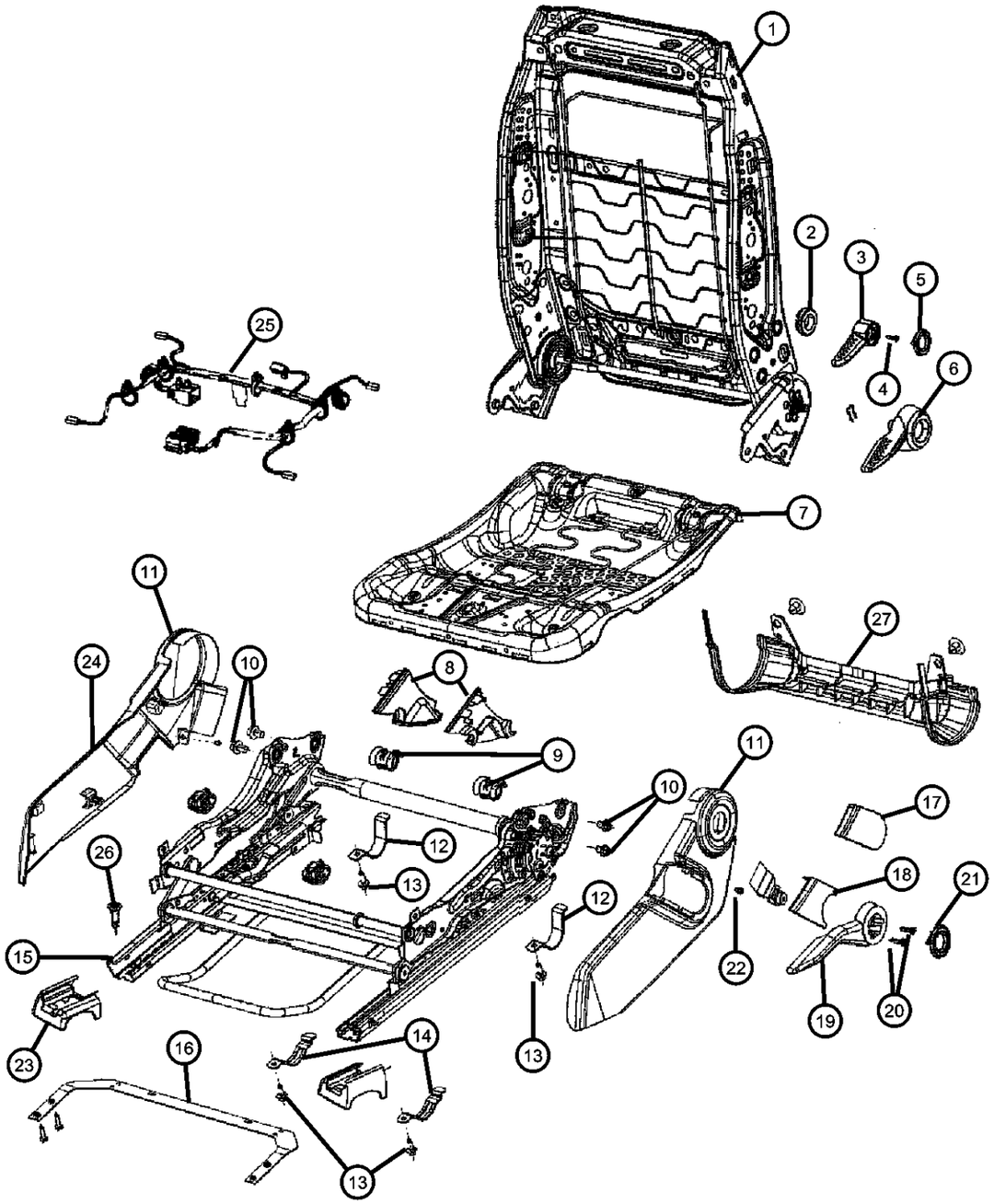

ITEM	PART NUMBER	QTY	LINE	SERIES	BODY	ENGINE	TRANS	TRIM	DESCRIPTION
	05191913AA	1	J, T		49, 74			*AL	Left
		1	J, T		49, 74			*D7	Left
24									SHIELD, Seat
	1ER351DAAA	1	U		49, 74			*E6	[DA] , 2 Way
		1	U		49, 74			*D7	[DA] , 2 Way
		1	U		49, 74			*AL	[DA] , 2 Way
	1ER351KAAA	1	U		49, 74			*E6	[KA] , 2 Way
		1	U		49, 74			*D7	[KA] , 2 Way
	1ER371DAAA	1	U		49, 74			*E6	[DA] , 4 Way
		1	U		49, 74			*D7	[DA] , 4 Way
		1	U		49, 74			*AL	[DA] , 4 Way
	1ER371KAAA	1	U		49, 74			*E6	[KA] , 4 Way
		1	U		49, 74			*D7	[KA] , 4 Way
		1	U		49, 74			*AL	[KA] , 4 Way
25		1							WIRING, Track Position Sensor, See 820 for more harnesses, (NOT SERVICED),
26	06102406AA	4							SCREW
27									PLATE
	68001883AA	1	J, T		49, 74			*E6	
		1	J		49, 74			*AL	
		1	U		49, 74			*E6	
		1	J, T		49, 74			*D7	
		1	U		49, 74			*D7	
		1	J, T		49, 74			*AL	
-28									SHIELD, RISER
	1FC72DK7AA	1	J		49			*AL	[KA] , Riser 2-Way, Right
		1	J		49			*D7	[KA] , Riser 2-Way, Right
	1FC72XDVAA	1	J		49			*D7	[DA] , Riser 2-Way, Right
	1FC73DK7AA	1	J		49			*D7	[KA] , Riser 2-Way, Left
	1FC73XDVAA	1	J		49			*D7	[DA] , Riser 2-Way, Left
	1FC75DK7AA	1	J		49			*AL	[KA] , Riser 4-Way, Left

COMPASS/PATRIOT (MK)

SERIES	LINE	BODY	ENGINE	TRANSMISSION
H = HIGHLINE L = LOWLINE P = PREMIUM	J = JEEP - 4WD T = JEEP - 2WD	49 = HATCHBACK TYPE #2 74 = SPORT UTILITY 4-DR TYPE #4	ED3 = 2.4L 4 Cyl DOHC 16V Dual VVT Engine	DD7 = 5-Speed Manual T355 Transmission DEF = 6-Speed Manual Aisin BG6 Trans DAV = Continuously Variable Transmission DAW = Cont.Var. w/Off-Rd Crawl Ratio Trans

AR = use ase required - = Non illustrrated part

Attaching Parts, Drivers Seat
Figure IMK-810

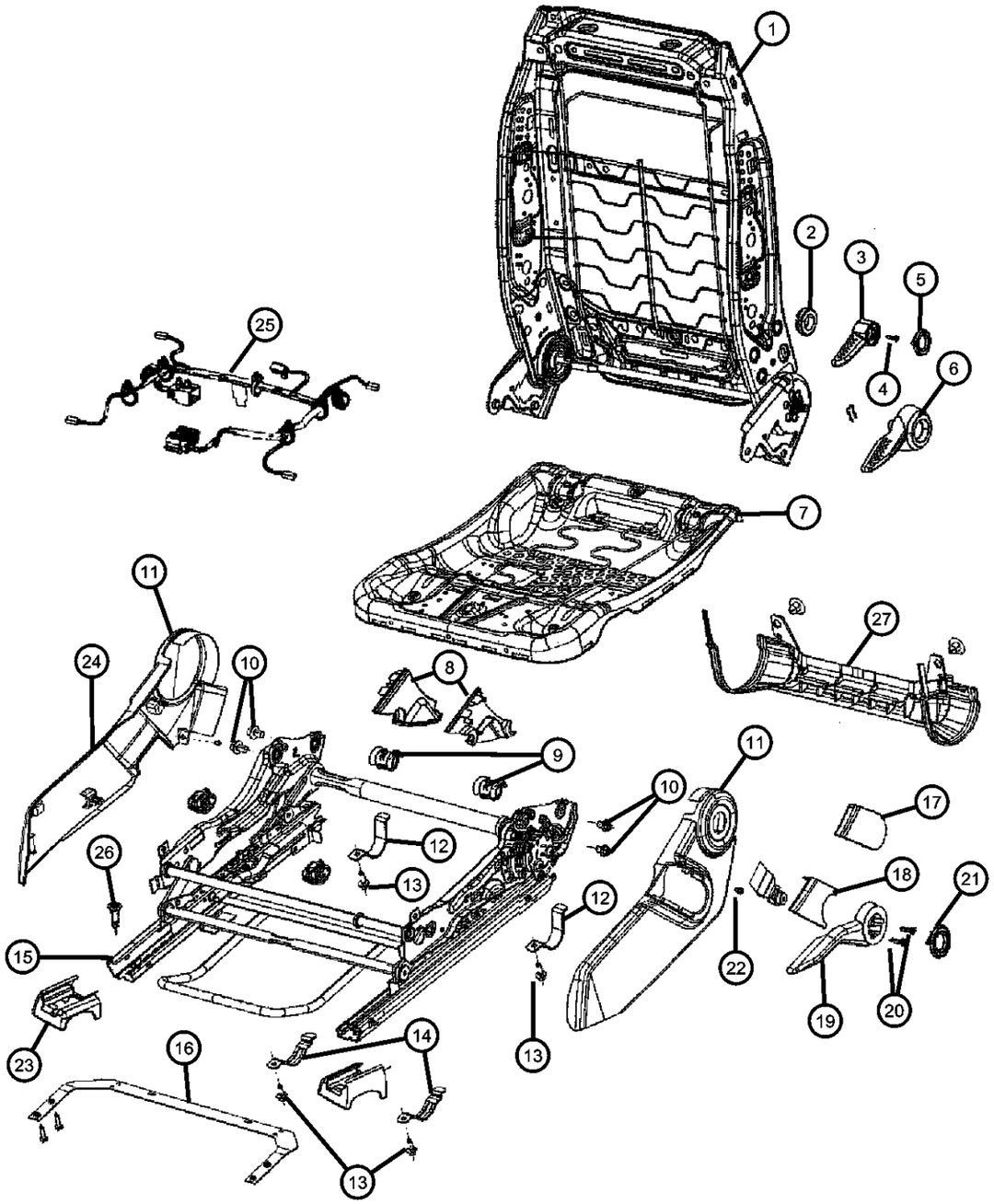

ITEM	PART NUMBER	QTY	LINE	SERIES	BODY	ENGINE	TRANS	TRIM	DESCRIPTION
	1FC75XDVAA	1	J		49			*AL	[DA] , Riser 4-Way, Left
		1	J		49			*D7	[DA] , Riser 4-Way, Left

COMPASS/PATRIOT (MK)

SERIES	LINE	BODY	ENGINE	TRANSMISSION
H = HIGHLINE L = LOWLINE P = PREMIUM	J = JEEP - 4WD T = JEEP - 2WD	49 = HATCHBACK TYPE #2 74 = SPORT UTILITY 4-DR TYPE #4	ED3 = 2.4L 4 Cyl DOHC 16V Dual VVT Engine	DD7 = 5-Speed Manual T355 Transmission DEF = 6-Speed Manual Aisin BG6 Trans DAV = Continuously Variable Transmission DAW = Cont.Var. w/Off-Rd Crawl Ratio Trans

AR = use ase required - = Non illustrrated part

Attaching Parts, Passenger Seat
Figure IMK-820

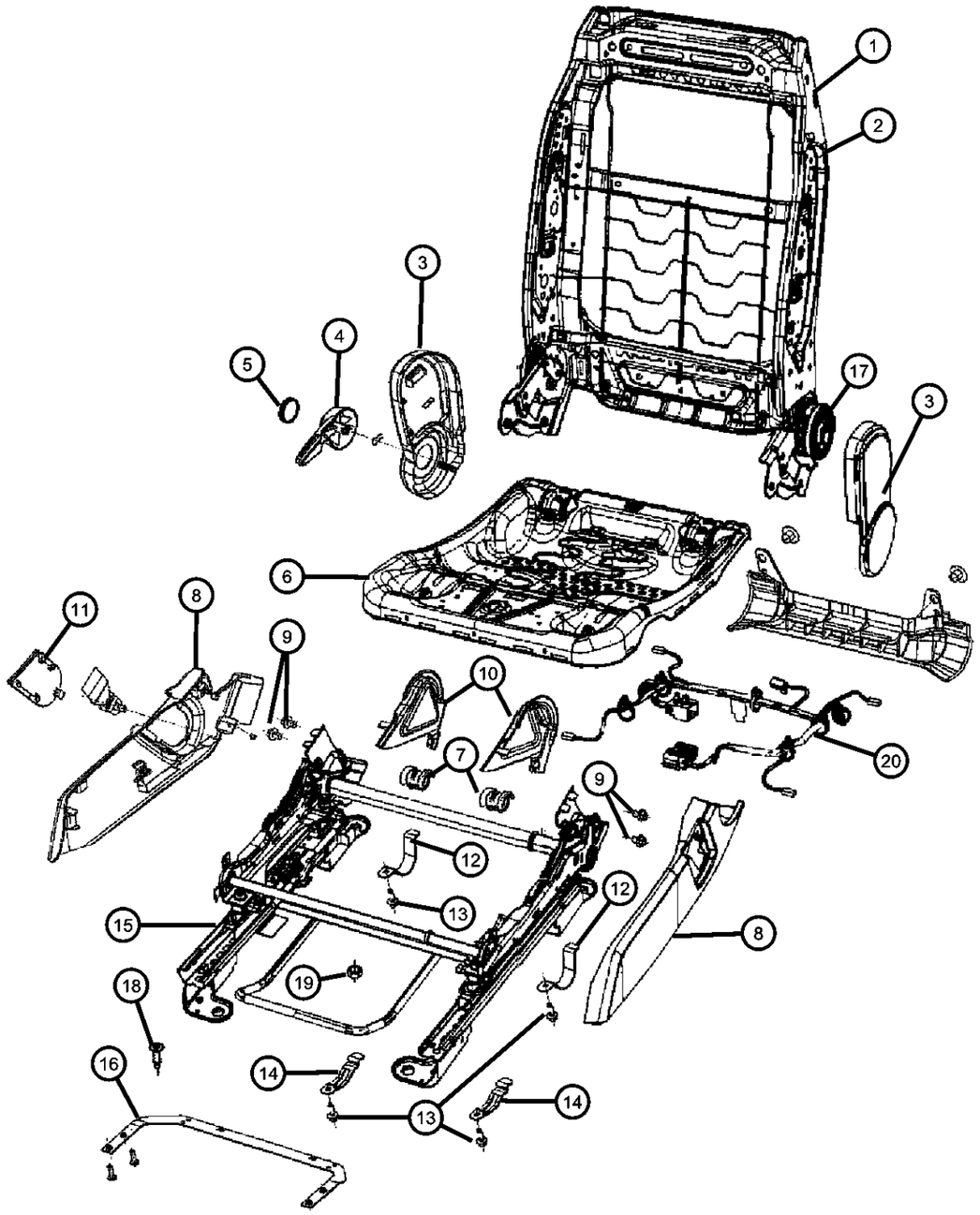

ITEM	PART NUMBER	QTY	LINE	SERIES	BODY	ENGINE	TRANS	TRIM	DESCRIPTION
1									FRAME, Front Seat Back
	05183306AA	1	U		49, 74			*D7	
		1	J, T		49, 74			*E6	
		1	U		49, 74			*E6	
		1	J, T		49, 74			*D7	
	05183309AA	1	J, T		49, 74			*E6	Fold Flat
		1	J, T		49, 74			*D7	Fold Flat
		1	J, T		49, 74			*AL	Fold Flat
	05183311AA	1	U		49, 74			*AL	
2									PANEL, Seat Back
	05183351AA	1	J, T		49, 74			*AL	Fold Flat
		1	U		49, 74			*AL	Fold Flat
		1	J, T		49, 74			*E6	Fold Flat
		1	U		49, 74			*E6	Fold Flat
		1	J, T		49, 74			*D7	Fold Flat
		1	U		49, 74			*D7	Fold Flat
	05183352AA	2	J, T		49, 74			*E6	
		2	U		49, 74			*E6	
		2	J, T		49, 74			*D7	
		2	U		49, 74			*D7	
		1	J, T		49, 74			*AL	
		1	U		49, 74			*AL	
3									SHIELD SIDE, Seat
	1DQ341DAAA	1	U		49, 74			*E6	[DA] , 4 Way, Outboard
		1	U		49, 74			*D7	[DA] , 4 Way, Outboard
		1	U		49, 74			*AL	[DA] , 4 Way, Outboard
	1DQ341KAAA	1	U		49, 74			*E6	[KA] , 4 Way, Outboard
		1	U		49, 74			*D7	[KA] , 4 Way, Outboard
		1	U		49, 74			*AL	[KA] , 4 Way, Outboard
	1DQ521DAAA	1	J, T		49, 74			*D7	[DA], Outboard
		1	J, T		49, 74			*AL	[DA], Outboard
		1	J, T		49, 74			*E6	[DA], Outboard
	1DQ521KAAA	1	J, T		49, 74			*E6	[KA], Outboard

COMPASS/PATRIOT (MK)

SERIES	LINE	BODY	ENGINE	TRANSMISSION
H = HIGHLINE L = LOWLINE P = PREMIUM	J = JEEP - 4WD T = JEEP - 2WD	49 = HATCHBACK TYPE #2 74 = SPORT UTILITY 4-DR TYPE #4	ED3 = 2.4L 4 Cyl DOHC 16V Dual VVT Engine	DD7 = 5-Speed Manual T355 Transmission DEF = 6-Speed Manual Aisin BG6 Trans DAV = Continuously Variable Transmission DAW = Cont.Var. w/Off-Rd Crawl Ratio Trans

Attaching Parts, Passenger Seat
Figure IMK-820

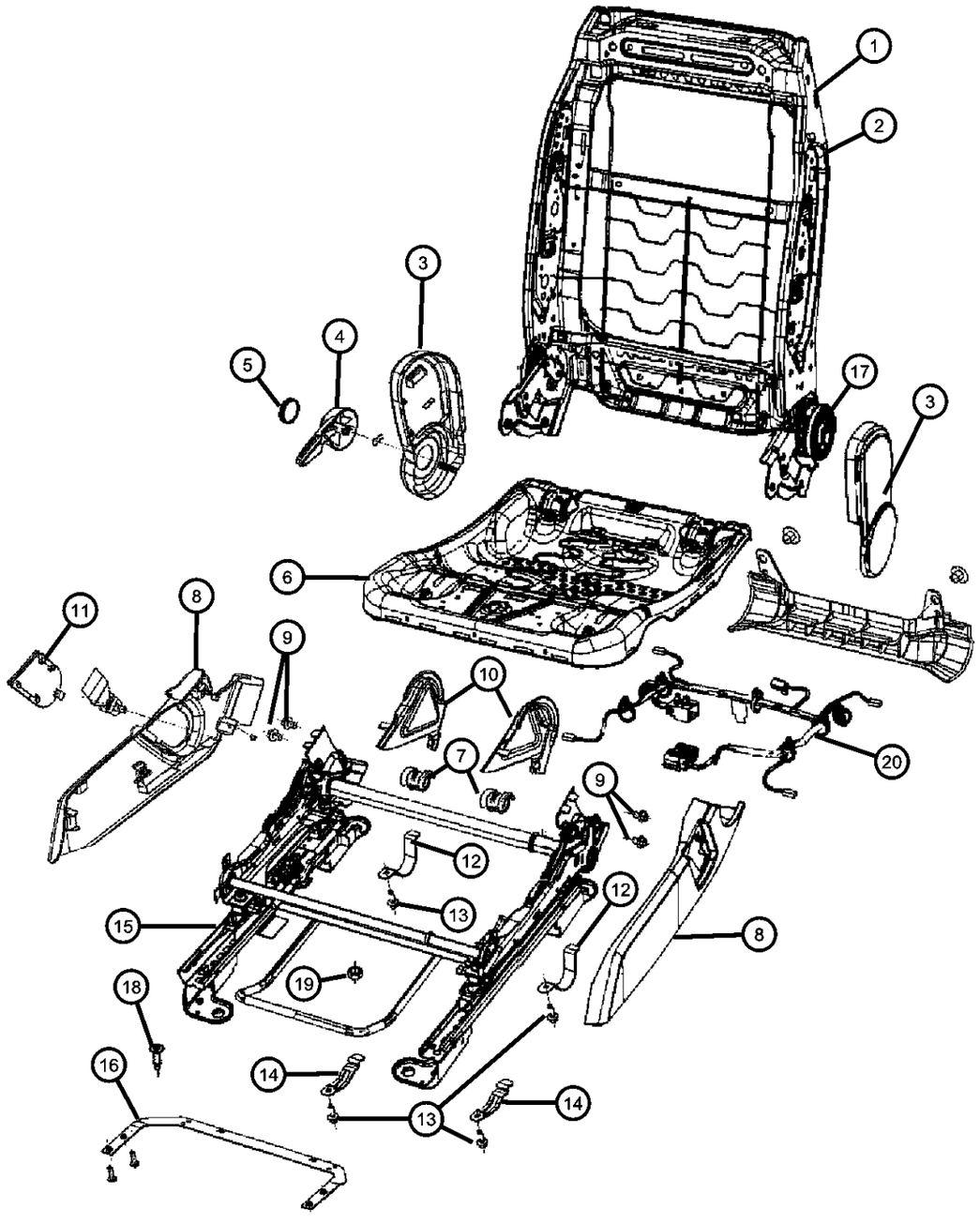

ITEM	PART NUMBER	QTY	LINE	SERIES	BODY	ENGINE	TRANS	TRIM	DESCRIPTION
		1	J, T		49, 74			*D7	[KA], Outboard
		1	J, T		49, 74			*AL	[KA], Outboard
	1DQ531DAAA	1	U		49, 74			*E6	[DA], Inboard
		1	U		49, 74			*D7	[DA], Inboard
		1	U		49, 74			*AL	[DA], Inboard
	1DQ531KAAA	1	U		49, 74			*AL	[KA], Inboard
		1	U		49, 74			*E6	[KA], Inboard
		1	U		49, 74			*D7	[KA], Inboard
	1DQ561DAAA	1	J		49			*D7	[DA] , Fold Flat, Inboard
		1	J		49			*AL	[DA] , Fold Flat, Inboard
	1DQ561KAAA	1	J, T		49, 74			*E6	[KA] , Fold Flat, Inboard
		1	J		49			*D7	[KA] , Fold Flat, Inboard
		1	J		49			*AL	[KA] , Fold Flat, Inboard
	1DQ571DAAA	1	U		49, 74			*E6	[DA], Outboard, Upper
		1	U		49, 74			*D7	[DA], Outboard, Upper
		1	U		49, 74			*AL	[DA], Outboard, Upper
	1DQ571KAAA	1	U		49, 74			*E6	[KA], Outboard, Upper
		1	U		49, 74			*D7	[KA], Outboard, Upper
		1	U		49, 74			*AL	[KA], Outboard, Upper
4									HANDLE, Lumbar
	1DQ641DAAA	1	J, T		49, 74			*AL	[DA]
		1	U		49, 74			*AL	[DA]
	1DQ641KAAA	1	J, T		49, 74			*AL	[KA]
		1	U		49, 74			*AL	[KA]
5									CAP
	1DQ661DAAA	1	J, T		49, 74			*AL	[DA]
		1	U		49, 74			*AL	[DA]
	1DQ661KAAA	1	J, T		49, 74			*AL	[KA]
		1	U		49, 74			*AL	[KA]
6									FRAME, Seat cushion
	05183324AA	2	J, T		49, 74			*E6	
		2	J, T		49, 74			*D7	

COMPASS/PATRIOT (MK)

SERIES	LINE	BODY	ENGINE	TRANSMISSION
H = HIGHLINE L = LOWLINE P = PREMIUM	J = JEEP - 4WD T = JEEP - 2WD	49 = HATCHBACK TYPE #2 74 = SPORT UTILITY 4-DR TYPE #4	ED3 = 2.4L 4 Cyl DOHC 16V Dual VVT Engine	DD7 = 5-Speed Manual T355 Transmission DEF = 6-Speed Manual Aisin BG6 Trans DAV = Continuously Variable Transmission DAW = Cont.Var. w/Off-Rd Crawl Ratio Trans

AR = use ase required - = Non illustrrated part

Attaching Parts, Passenger Seat
Figure IMK-820

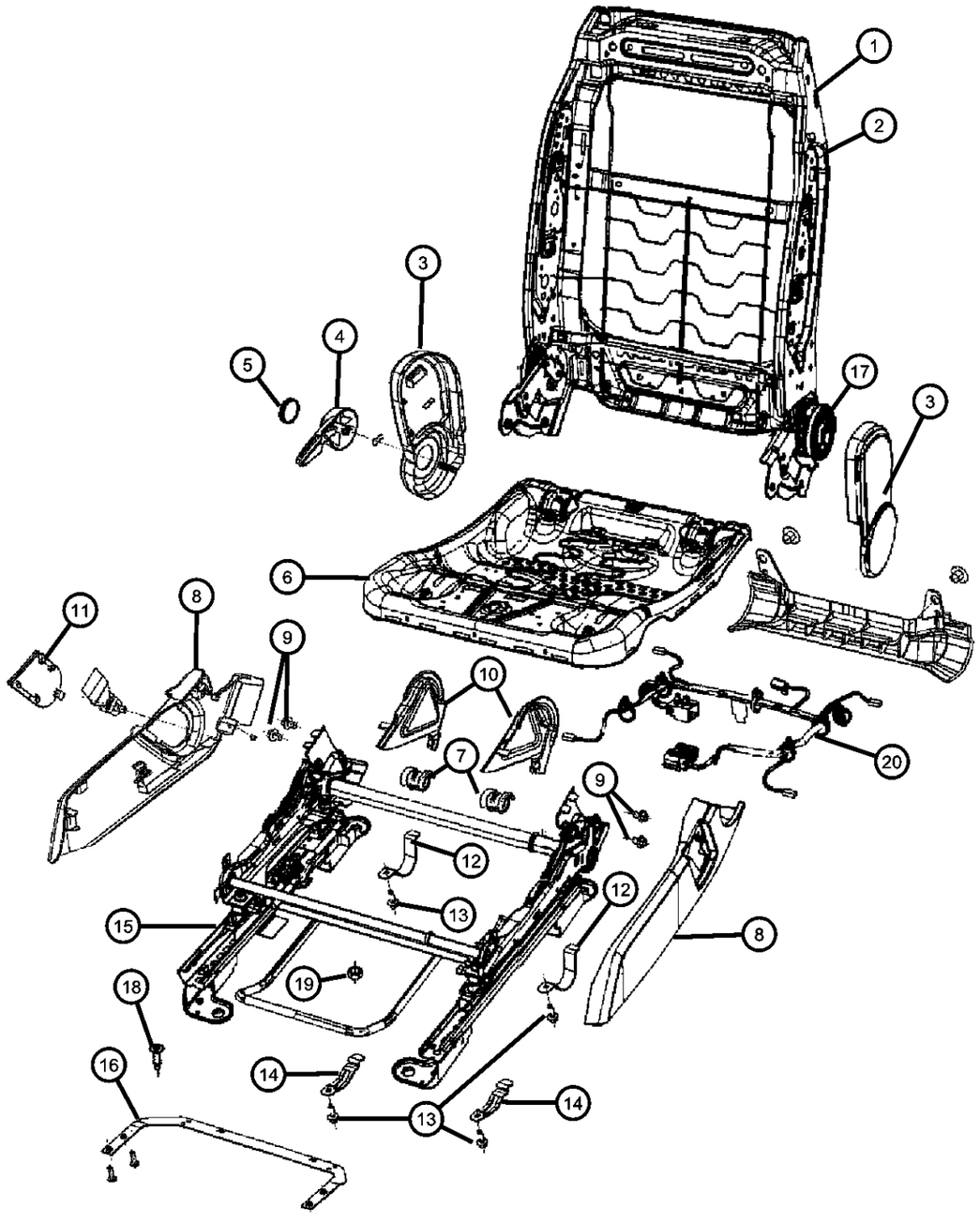

ITEM	PART NUMBER	QTY	LINE	SERIES	BODY	ENGINE	TRANS	TRIM	DESCRIPTION
		2	U		49, 74			*D7	
		2	U		49, 74			*E6	
		2	J, T		49, 74			*AL	
		2	J		49, 74			*AL	
7									BRACKET
	05183369AA	4	J, T		49, 74			*E6	
		4	J, T		49, 74			*D7	
		4	U		49, 74			*E6	
		4	U		49, 74			*D7	
		4	J, T		49, 74			*AL	
		4	J		49, 74			*AL	
8									SHIELD SIDE, Seat
	1DQ301DAAA	1	J, T		49, 74			*E6	[DA] , 2 Way, Outboard, Right
		1	J, T		49, 74			*AL	[DA] , 2 Way, Outboard, Right
		1	J, T		49, 74			*D7	[DA] , 2 Way, Outboard, Right
	1DQ301KAAA	1	J, T		49, 74			*E6	[KA] , 2 Way, Outboard, Right
		1	J, T		49, 74			*D7	[KA] , 2 Way, Outboard, Right
		1	J, T		49, 74			*AL	[KA] , 2 Way, Outboard, Right
	1DQ321DAAA	1	U		49, 74			*E6	[DA] , 2 Way, Right
		1	J, T		49, 74			*D7	[DA] , 2 Way, Right
		1	U		49, 74			*D7	[DA] , 2 Way, Right
		1	J, T		49, 74			*E6	[DA] , 2 Way, Right
	1DQ321KAAA	1	U		49, 74			*E6	[KA] , 2 Way, Right
		1	J, T		49, 74			*D7	[KA] , 2 Way, Right
		1	U		49, 74			*D7	[KA] , 2 Way, Right
		1	J, T		49, 74			*E6	[KA] , 2 Way, Right
	1DQ441DAAA	1	J, T		49, 74			*E6	[DA] , 2 Way, Inboard
		1	U		49, 74			*E6	[DA] , 2 Way, Inboard
		1	J, T		49, 74			*D7	[DA] , 2 Way, Inboard
		1	U		49, 74			*D7	[DA] , 2 Way, Inboard
	1DQ441KAAA	1	J, T		49, 74			*E6	[KA] , 2 Way, Inboard
		1	U		49, 74			*E6	[KA] , 2 Way, Inboard

COMPASS/PATRIOT (MK)

SERIES	LINE	BODY	ENGINE	TRANSMISSION
H = HIGHLINE L = LOWLINE P = PREMIUM	J = JEEP - 4WD T = JEEP - 2WD	49 = HATCHBACK TYPE #2 74 = SPORT UTILITY 4-DR TYPE #4	ED3 = 2.4L 4 Cyl DOHC 16V Dual VVT Engine	DD7 = 5-Speed Manual T355 Transmission DEF = 6-Speed Manual Aisin BG6 Trans DAV = Continuously Variable Transmission DAW = Cont.Var. w/Off-Rd Crawl Ratio Trans

AR = use ase required - = Non illustrrated part

Attaching Parts, Passenger Seat
Figure IMK-820

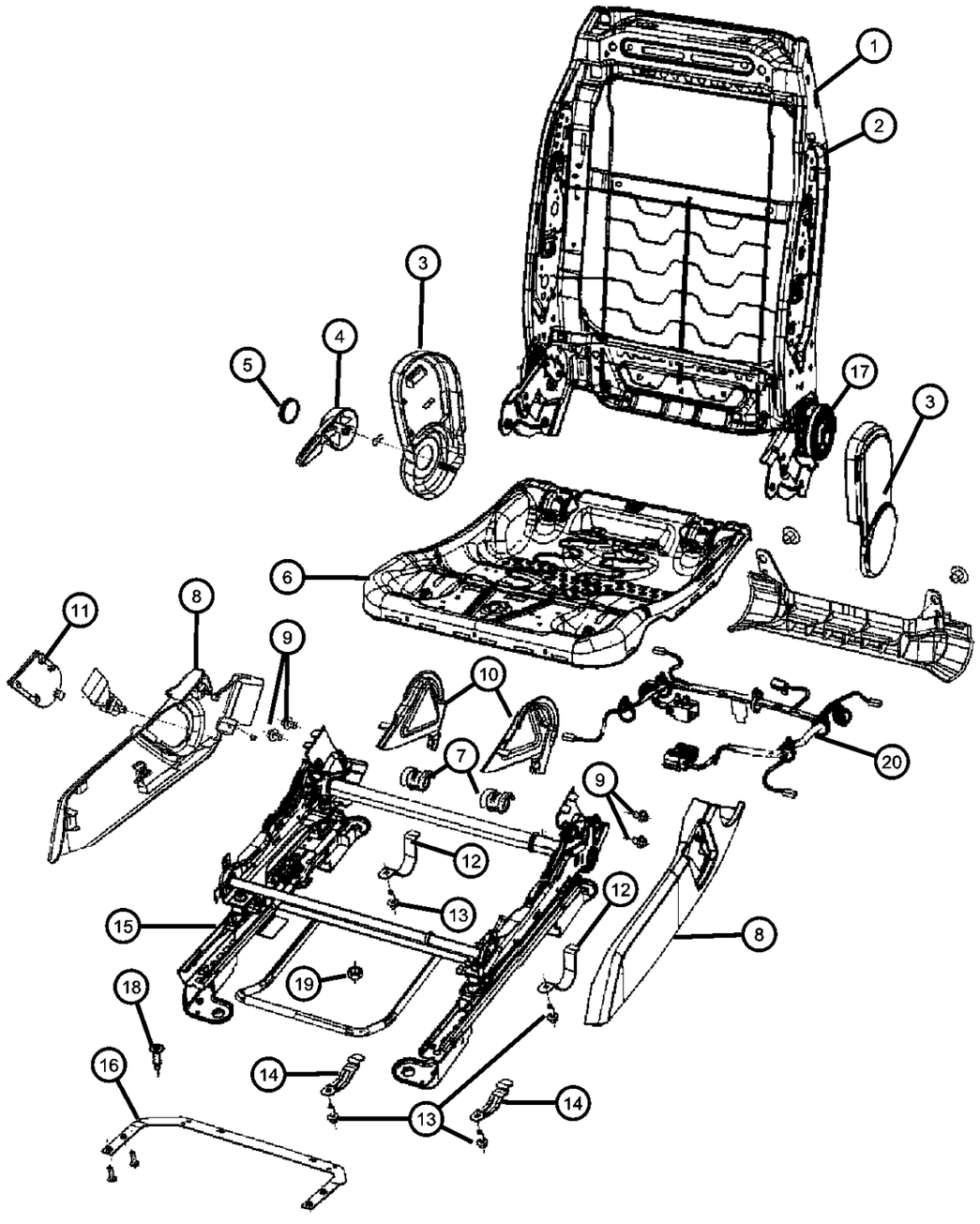

ITEM	PART NUMBER	QTY	LINE	SERIES	BODY	ENGINE	TRANS	TRIM	DESCRIPTION
		1	J, T		49, 74			*D7	[KA] , 2 Way, Inboard
		1	U		49, 74			*D7	[KA] , 2 Way, Inboard
	1ER861DAAA	1	J, T		49, 74			*E6	[DA] , 2 Way , Fold Flat, Inboard
		1	J, T		49, 74			*D7	[DA] , 2 Way , Fold Flat, Inboard
		1	J, T		49, 74			*AL	[DA] , 2 Way , Fold Flat, Inboard
	1ER861KAAA	1	J, T		49, 74			*AL	[KA] , 2 Way , Fold Flat, Inboard
		1	J, T		49, 74			*E6	[KA] , 2 Way , Fold Flat, Inboard
		1	J, T		49, 74			*D7	[KA] , 2 Way , Fold Flat, Inboard
9									SCREW, Hex Head
	06104264AA	2	J, T		49, 74				
		2	U		49, 74				
10									SHIELD SIDE, Seat
	1DQ461DAAA	1	J, T		49, 74			*E6	[DA], Right
		1	U		49, 74			*E6	[DA], Right
		1	J, T		49, 74			*D7	[DA], Right
		1	U		49, 74			*D7	[DA], Right
		1	U		49, 74			*AL	[DA], Right
		1	J, T		49, 74			*AL	[DA], Right
	1DQ461K2AA	1	J, T		49, 74			*D7	[KA], Right
		1	U		49, 74			*D7	[KA], Right
	1DQ461KAAA	1	J, T		49, 74			*E6	[KA], Right
		1	U		49, 74			*E6	[KA], Right
		1	U		49, 74			*AL	[KA], Right
		1	J, T		49, 74			*AL	[KA], Right
	1DQ471DAAA	1	J, T		49, 74			*E6	[DA], Left
		1	U		49, 74			*E6	[DA], Left
		1	J, T		49, 74			*D7	[DA], Left
		1	U		49, 74			*D7	[DA], Left
		1	U		49, 74			*AL	[DA], Left
		1	J, T		49, 74			*AL	[DA], Left
	1DQ471K2AA	1	J, T		49, 74			*D7	[KA], Left
		1	U		49, 74			*D7	[KA], Left

COMPASS/PATRIOT (MK)

SERIES	LINE	BODY	ENGINE	TRANSMISSION
H = HIGHLINE L = LOWLINE P = PREMIUM	J = JEEP - 4WD T = JEEP - 2WD	49 = HATCHBACK TYPE #2 74 = SPORT UTILITY 4-DR TYPE #4	ED3 = 2.4L 4 Cyl DOHC 16V Dual VVT Engine	DD7 = 5-Speed Manual T355 Transmission DEF = 6-Speed Manual Aisin BG6 Trans DAV = Continuously Variable Transmission DAW = Cont.Var. w/Off-Rd Crawl Ratio Trans

AR = use ase required - = Non illustrrated part

Attaching Parts, Passenger Seat
Figure IMK-820

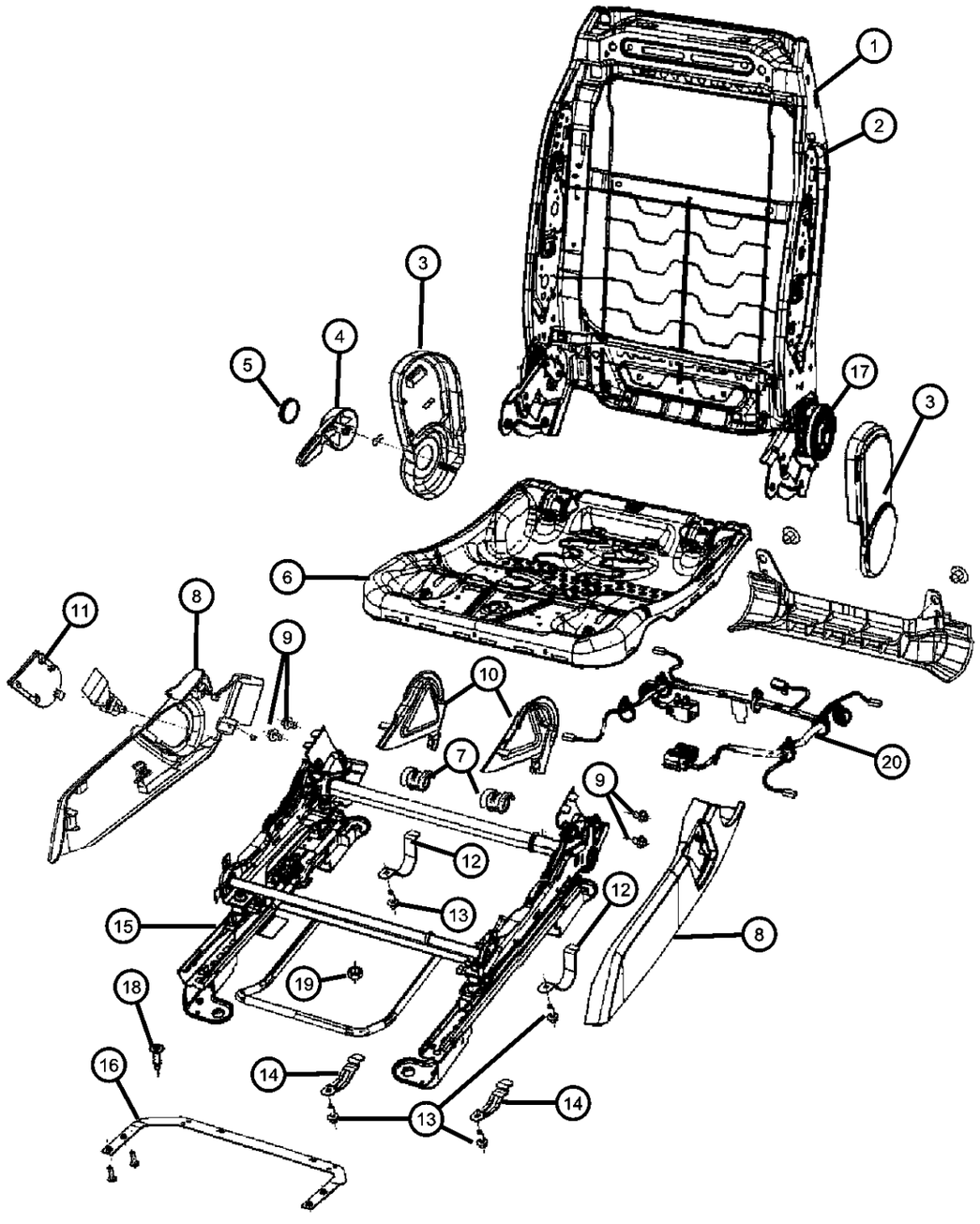

ITEM	PART NUMBER	QTY	LINE	SERIES	BODY	ENGINE	TRANS	TRIM	DESCRIPTION
	1DQ471KAAA	1	U		49, 74			*AL	[KA], Left
		1	J, T		49, 74			*AL	[KA], Left
		1	J, T		49, 74			*E6	[KA], Left
		1	U		49, 74			*E6	[KA], Left
11									COVER, Anchor
	1DQ361DAAA	1	J, T		49, 74			*E6	[DA]
		1	U		49, 74			*E6	[DA]
		1	U		49, 74			*D7	[DA]
		1	J, T		49, 74			*D7	[DA]
		1	J, T		49, 74			*AL	[DA]
	1DQ361KAAA	1	J, T		49, 74			*E6	[KA]
		1	U		49, 74			*E6	[KA]
		1	J, T		49, 74			*AL	[KA]
		1	J, T		49, 74			*D7	[KA]
		1	U		49, 74			*D7	[KA]
12									CLAMP
	05183371AA	4	J, T		49, 74			*E6	
		4	U		49, 74			*D7	
		4	U		49, 74			*E6	
		4	J, T		49, 74			*D7	
		4	J, T		49, 74			*AL	
		4	U		49, 74			*AL	
13									SCREW
	05183368AA	8	U		49, 74			*D7	
		8	J, T		49, 74			*E6	
		8	U		49, 74			*E6	
		8	J, T		49, 74			*D7	
		8	J, T		49, 74			*AL	
		8	U		49, 74			*AL	
14									CLAMP
	05183372AA	4	J, T		49, 74			*E6	
		4	U		49, 74			*E6	

COMPASS/PATRIOT (MK)

SERIES	LINE	BODY	ENGINE	TRANSMISSION
H = HIGHLINE L = LOWLINE P = PREMIUM	J = JEEP - 4WD T = JEEP - 2WD	49 = HATCHBACK TYPE #2 74 = SPORT UTILITY 4-DR TYPE #4	ED3 = 2.4L 4 Cyl DOHC 16V Dual VVT Engine	DD7 = 5-Speed Manual T355 Transmission DEF = 6-Speed Manual Aisin BG6 Trans DAV = Continuously Variable Transmission DAW = Cont.Var. w/Off-Rd Crawl Ratio Trans

AR = use ase required - = Non illustrrated part

Attaching Parts, Passenger Seat
Figure IMK-820

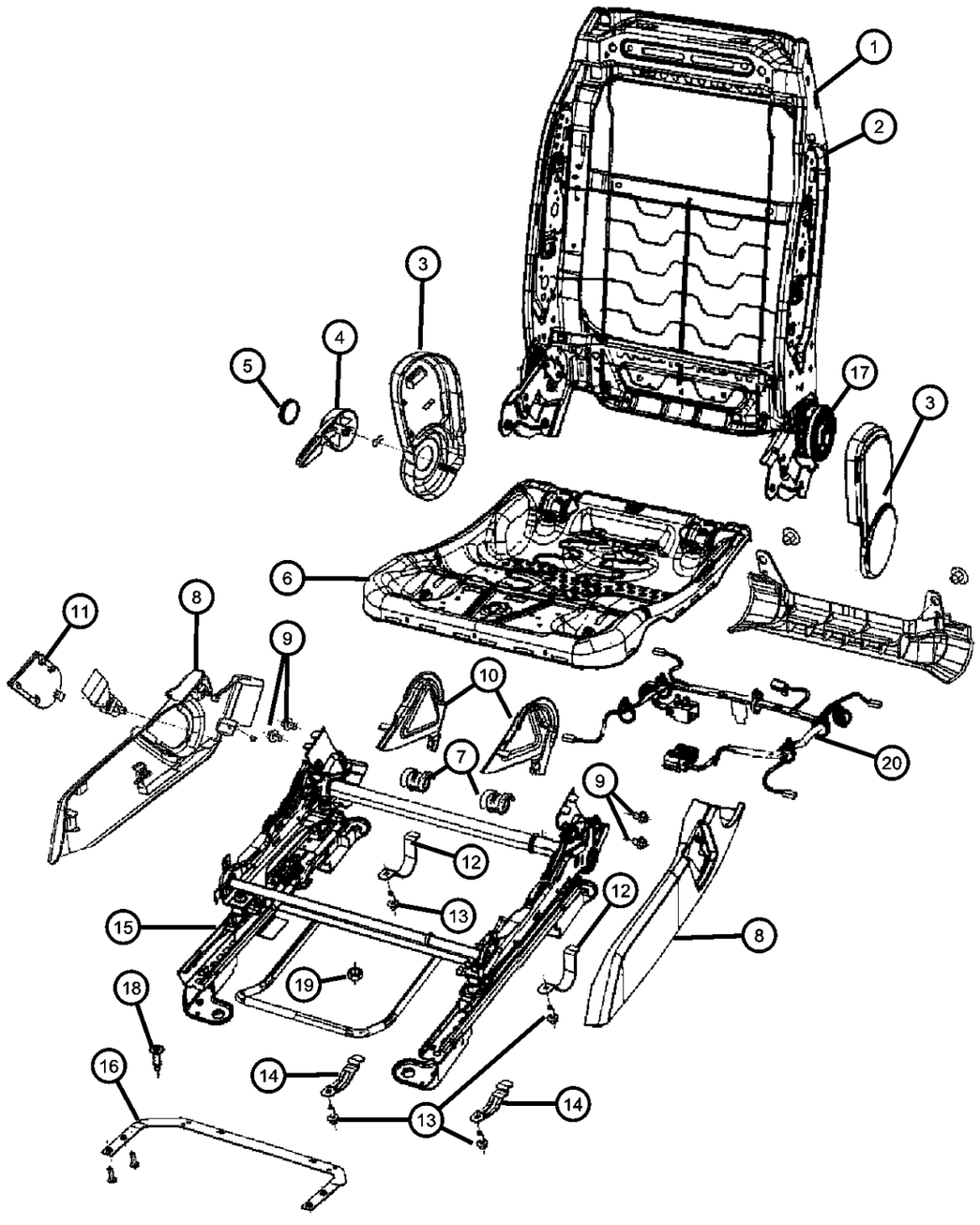

ITEM	PART NUMBER	QTY	LINE	SERIES	BODY	ENGINE	TRANS	TRIM	DESCRIPTION
		4	J, T		49, 74			*D7	
		4	U		49, 74			*D7	
		4	J, T		49, 74			*AL	
		4	U		49, 74			*AL	
15									ADJUSTER, Manual Seat
	68001648AA	1	J, T		49, 74			*E6	2 Way , With [XCA]
		1	J, T		49, 74			*AL	2 Way , With [XCA]
	68001649AA	1	J, T		49, 74			*E6	2 Way
		1	J, T		49, 74			*D7	2 Way , With [XCA]
		1	U		49, 74			*AL	2 Way
		2	U		49, 74			*E6	2 Way
		1	J, T		49, 74			*D7	2 Way
		2	U		49, 74			*D7	2 Way
		1	J, T		49, 74			*AL	2 Way
	68001890AA	1	U		49, 74			*E6	4 Way
		1	U		49, 74			*D7	4 Way
16									BRACE, Seat Track
	05191920AA	1	U		49, 74			*E6	
		2	J, T		49, 74			*E6	
		2	U		49, 74			*AL	
		2	J, T		49, 74			*AL	
		2	J, T		49, 74			*D7	
		1	U		49, 74			*D7	
17									CABLE, Recliner, Fold Flat
	05183330AA	1	J, T		49, 74			*E6	
		1	J, T		49, 74			*AL	
		1	U		49, 74			*E6	
		1	U		49, 74			*D7	
		1	J, T		49, 74			*D7	
		1	U		49, 74			*AL	
18	06102406AA	4							SCREW
19	06104718AA	1							NUT

COMPASS/PATRIOT (MK)

SERIES	LINE	BODY	ENGINE	TRANSMISSION
H = HIGHLINE L = LOWLINE P = PREMIUM	J = JEEP - 4WD T = JEEP - 2WD	49 = HATCHBACK TYPE #2 74 = SPORT UTILITY 4-DR TYPE #4	ED3 = 2.4L 4 Cyl DOHC 16V Dual VVT Engine	DD7 = 5-Speed Manual T355 Transmission DEF = 6-Speed Manual Aisin BG6 Trans DAV = Continuously Variable Transmission DAW = Cont.Var. w/Off-Rd Crawl Ratio Trans

Attaching Parts, Passenger Seat
Figure IMK-820

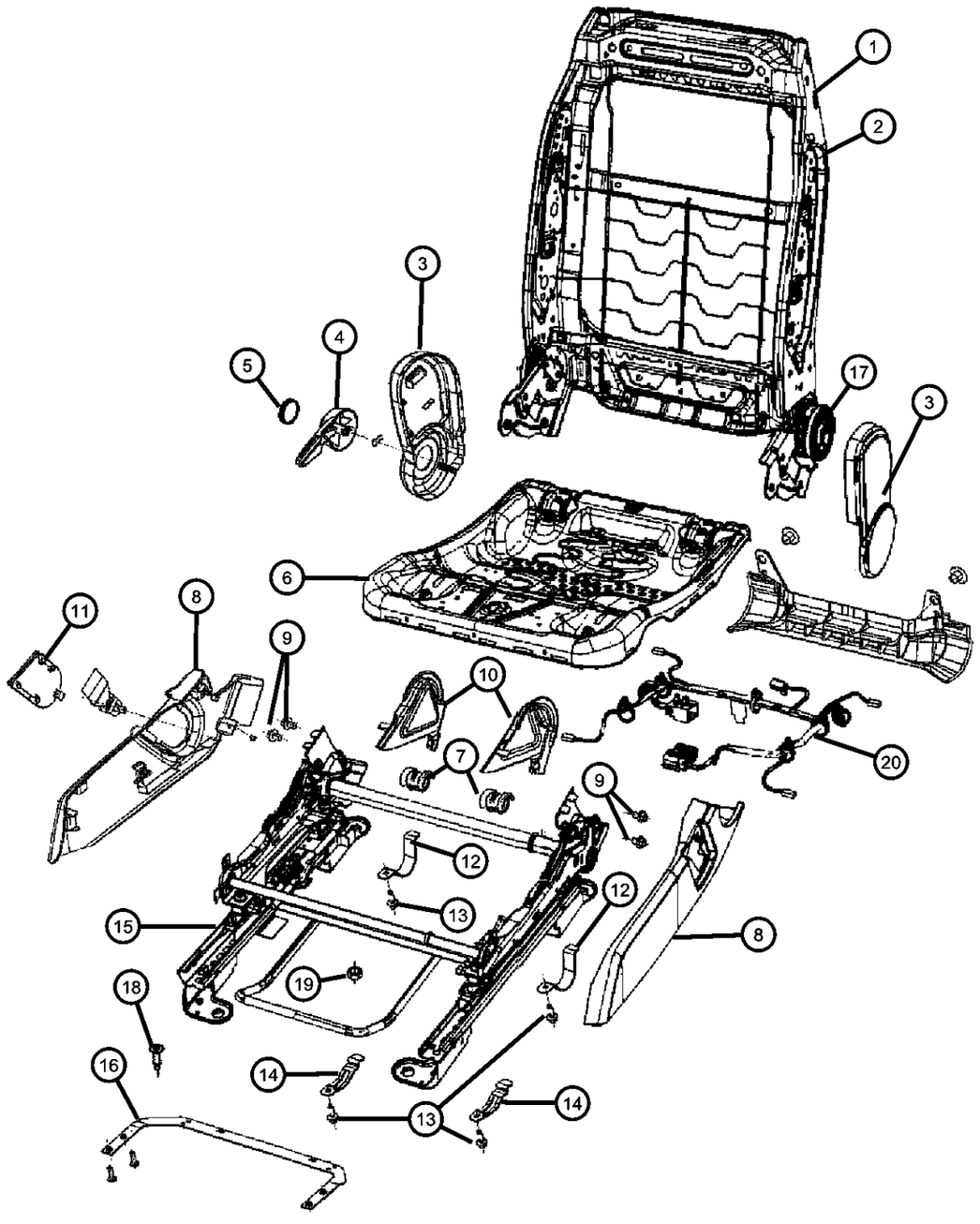

ITEM	PART NUMBER	QTY	LINE	SERIES	BODY	ENGINE	TRANS	TRIM	DESCRIPTION
20									WIRING, TPS and OCS Harness
	05183379AA	1	J, T		49			*D7	
		1	J, T		49			*K6	
		1	J, T		49, 74			*E6	

COMPASS/PATRIOT (MK)

SERIES	LINE	BODY	ENGINE	TRANSMISSION
H = HIGHLINE L = LOWLINE P = PREMIUM	J = JEEP - 4WD T = JEEP - 2WD	49 = HATCHBACK TYPE #2 74 = SPORT UTILITY 4-DR TYPE #4	ED3 = 2.4L 4 Cyl DOHC 16V Dual VVT Engine	DD7 = 5-Speed Manual T355 Transmission DEF = 6-Speed Manual Aisin BG6 Trans DAV = Continuously Variable Transmission DAW = Cont.Var. w/Off-Rd Crawl Ratio Trans

Lift Gate Trim
Figure IMK-1010

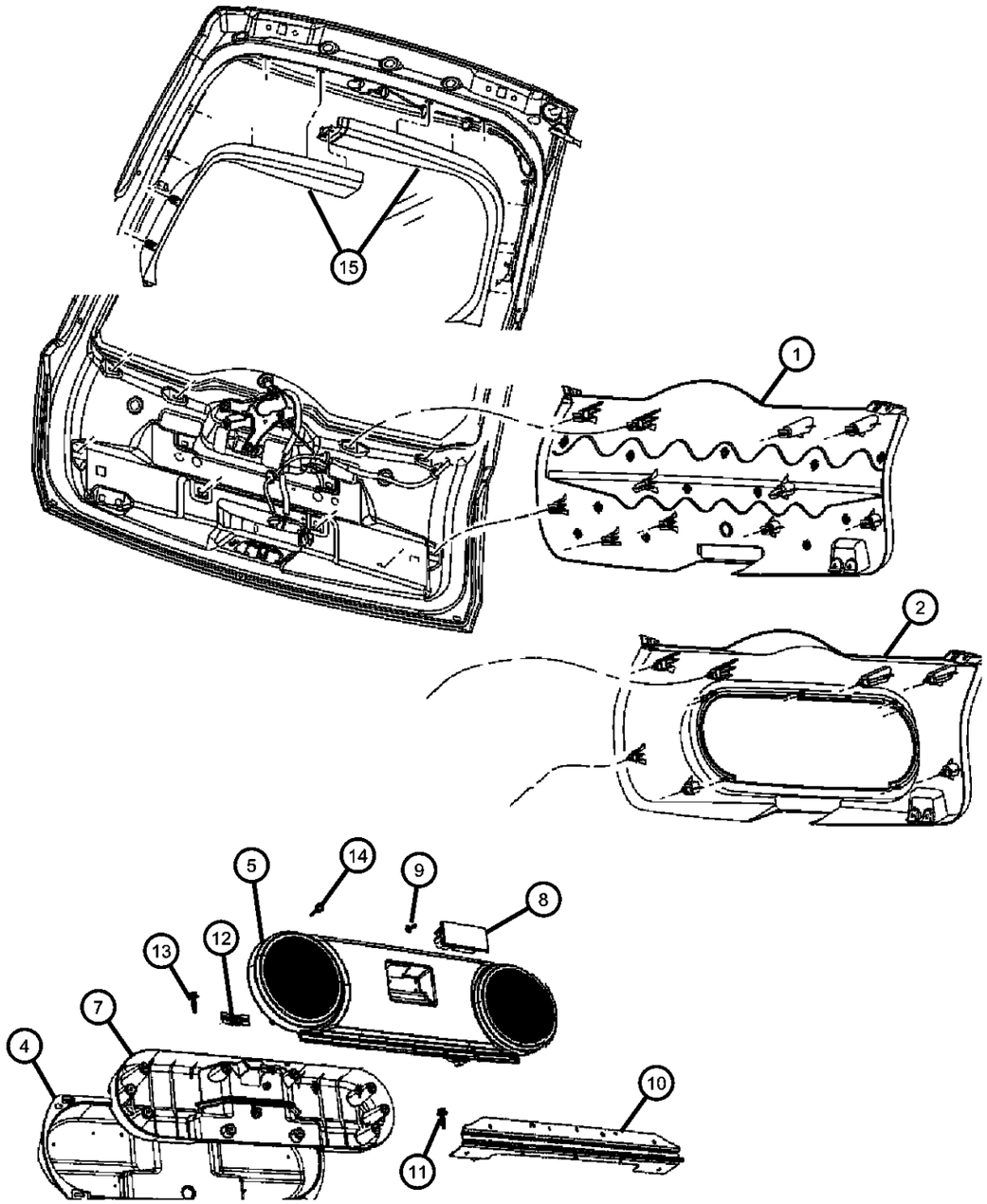

ITEM	PART NUMBER	QTY	LINE	SERIES	BODY	ENGINE	TRANS	TRIM	DESCRIPTION
1									PANEL, Liftgate Trim, Without Speakers
	1AZ45DK7AB	1	J, T, U		74			*O0	[KA]
	1AZ45XDVAB	1	J, T, U		74			*O0	[DA]
	0YG70DK7AB	1	J, T, U		49			*O0	[KA]
	0YG70XDVAB	1	J, T, U		49			*O0	[DA]
2									PANEL, Liftgate Trim, With Speakers
	1AW62DK7AB	1	J, T, U		49			*O0	[KA]
	1AW62XDVAB	1	J, T, U		49			*O0	[DA]
	1AZ48DK7AB	1	J, T, U		74			*O0	[KA]
	1AZ48XDVAB	1	J, T, U		74			*O0	[DA]
-3									CLIP, Trim
	68038959AA	7	J, T, U		49			*O0	
		9	J, T, U		74			*O0	
4									PANEL, Speaker
	1DR91DK7AA	1						*O0	[KA]
	1DR91XDVAA	1						*O0	[DA]
5									PANEL, Speaker
	1DR92DK7AA	1						*O0	[KA]
	1DR92XDVAA	1						*O0	[DA]
-6	06506955AA	4							NUT, Snap In
7									PANEL, Speaker
	1DR93DK7AA	1						*O0	[KA]
	1DR93XDVAA	1						*O0	[DA]
8									HANDLE
	1DK62DK7AB	1	J, T, U		49, 74			*O0	[KA]
	1DK62XDVAB	1	J, T, U		49, 74			*O0	[DA]
9	05183413AA	3						*O0	SCREW
10	05183428AA	1						*O0	HINGE
11	05183414AA	10						*O0	SCREW
12	05183416AA	4						*O0	CLIP, Z-Axis
13	05183415AA	4						*O0	SCREW
14	05191887AA	1						*O0	BUMPER, Liftgate

COMPASS/PATRIOT (MK)

SERIES	LINE	BODY	ENGINE	TRANSMISSION
H = HIGHLINE L = LOWLINE P = PREMIUM	J = JEEP - 4WD T = JEEP - 2WD	49 = HATCHBACK TYPE #2 74 = SPORT UTILITY 4-DR TYPE #4	ED3 = 2.4L 4 Cyl DOHC 16V Dual VVT Engine	DD7 = 5-Speed Manual T355 Transmission DEF = 6-Speed Manual Aisin BG6 Trans DAV = Continuously Variable Transmission DAW = Cont.Var. w/Off-Rd Crawl Ratio Trans

AR = use ase required - = Non illustrrated part

Lift Gate Trim
Figure IMK-1010

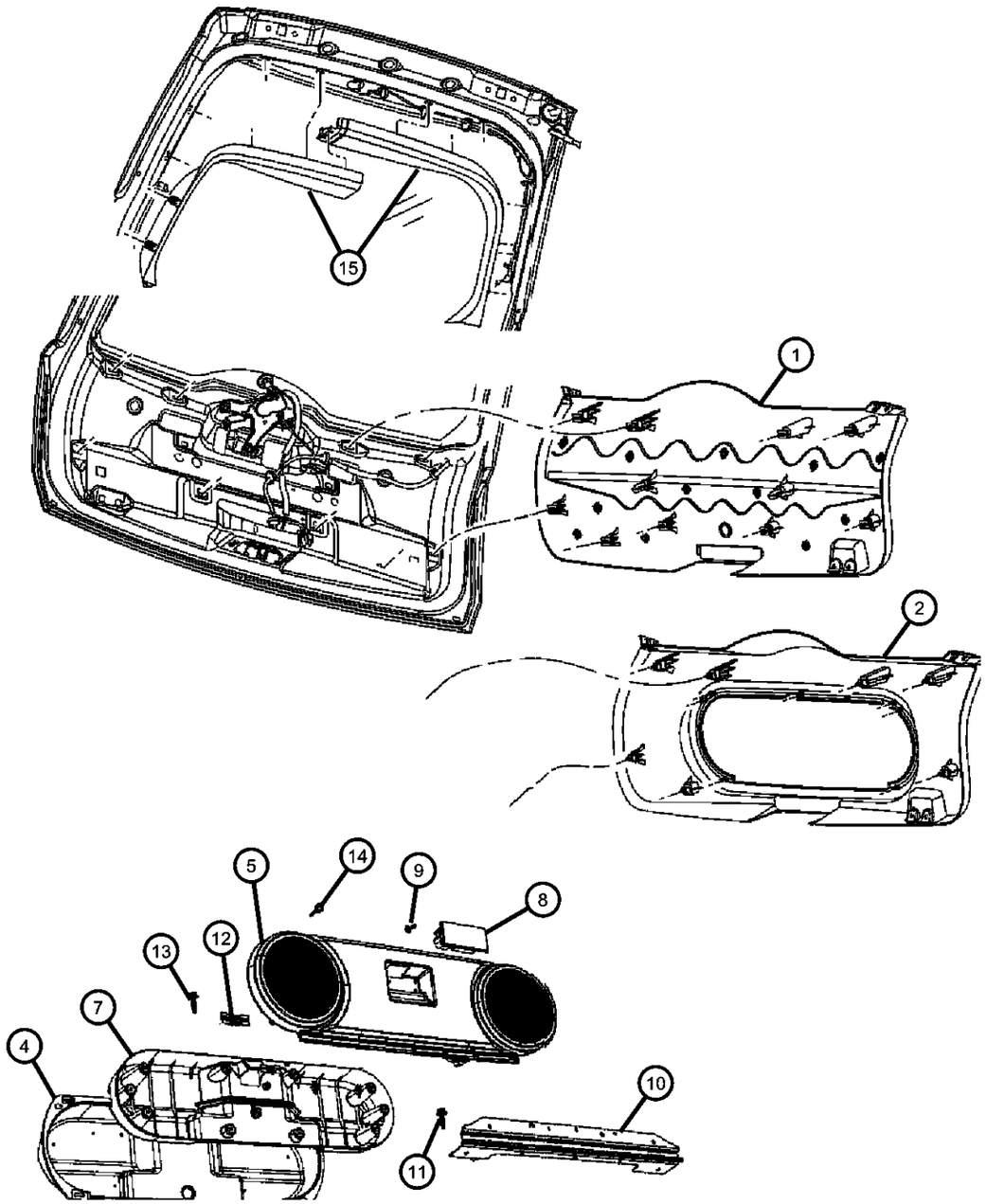

ITEM	PART NUMBER	QTY	LINE	SERIES	BODY	ENGINE	TRANS	TRIM	DESCRIPTION
15									PANEL, Liftgate
	1AW64DX9AC	1	J		49			*O0	[DA], Right
	1AW64DK7AB	1	J		49			*O0	[KA], Right
	1AW65XDVAB	1	J		49			*O0	[DA], Left
	1AW65DX9AC	1	J, T, U		49			*O0	[KA], Left

COMPASS/PATRIOT (MK)

SERIES	LINE	BODY	ENGINE	TRANSMISSION
H = HIGHLINE L = LOWLINE P = PREMIUM	J = JEEP - 4WD T = JEEP - 2WD	49 = HATCHBACK TYPE #2 74 = SPORT UTILITY 4-DR TYPE #4	ED3 = 2.4L 4 Cyl DOHC 16V Dual VVT Engine	DD7 = 5-Speed Manual T355 Transmission DEF = 6-Speed Manual Aisin BG6 Trans DAV = Continuously Variable Transmission DAW = Cont.Var. w/Off-Rd Crawl Ratio Trans

AR = use ase required - = Non illustrrated part

Group - SMK

Body Sheet Metal Except Doors

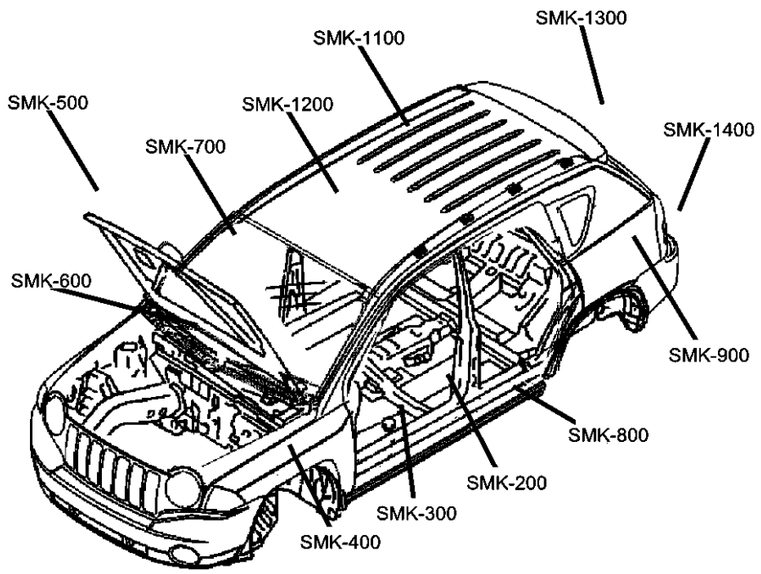

SMK-1100 Roof Panels 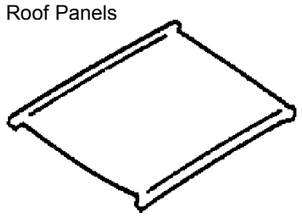	**SMK-1200** Sunroof 	**SMK-1300** Deck Lid 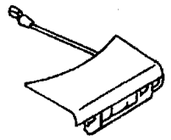	**SMK-1600** Luggage Rack
SMK-200 Floor Pans 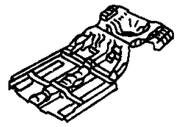	**SMK-300** Plugs 	**SMK-400** Front Fenders 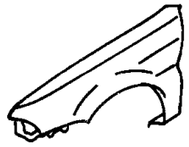	**SMK-500** Hood and Hood Release
SMK-600 Cowl and Dash Panel 	**SMK-700** Glass and Mirror 	**SMK-800** Aperture Panel 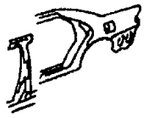	**SMK-900** Quarter Panel 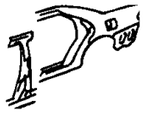

Group - SMK Body Sheet Metal Except Doors

Illustration Title — Group-Fig. No.

Floor Pans
Front Floor Pan ..... Fig. SMK - 210
Rear Floor Pan ..... Fig. SMK - 220
Underbody Shields ..... Fig. SMK - 230

Plugs
Plugs & Tapes ..... Fig. SMK - 310

Front Fenders
Fender, Front ..... Fig. SMK - 410

Hood and Hood Release
Hood ..... Fig. SMK - 510

Cowl and Dash Panel
Cowl and Dash Panel ..... Fig. SMK - 610

Glass and Mirror
Glass, Windshield, Backlite, Quarter Window, Rear View Mirror [49] Body ..... Fig. SMK - 710
Glass , Windhield , Backlite , Quater Window , Rear View Mirror - [74] Body ..... Fig. SMK - 720

Aperture Panel
Aperture Panel ..... Fig. SMK - 810

Quarter Panel
Quarter Panel - [49] Body ..... Fig. SMK - 910
Quarter Panel - 74 Body ..... Fig. SMK - 915

Roof Panels
Roof ..... Fig. SMK - 1110

Sunroof
Sunroof ..... Fig. SMK - 1210

Deck Lid
Liftgate - [49] Body ..... Fig. SMK - 1310
Liftgate - [74] Body ..... Fig. SMK - 1320

Luggage Rack
Luggage Rack - [49] Body ..... Fig. SMK - 1610
Luggage Rack - [74] Body ..... Fig. SMK - 1620

Front Floor Pan
Figure SMK-210

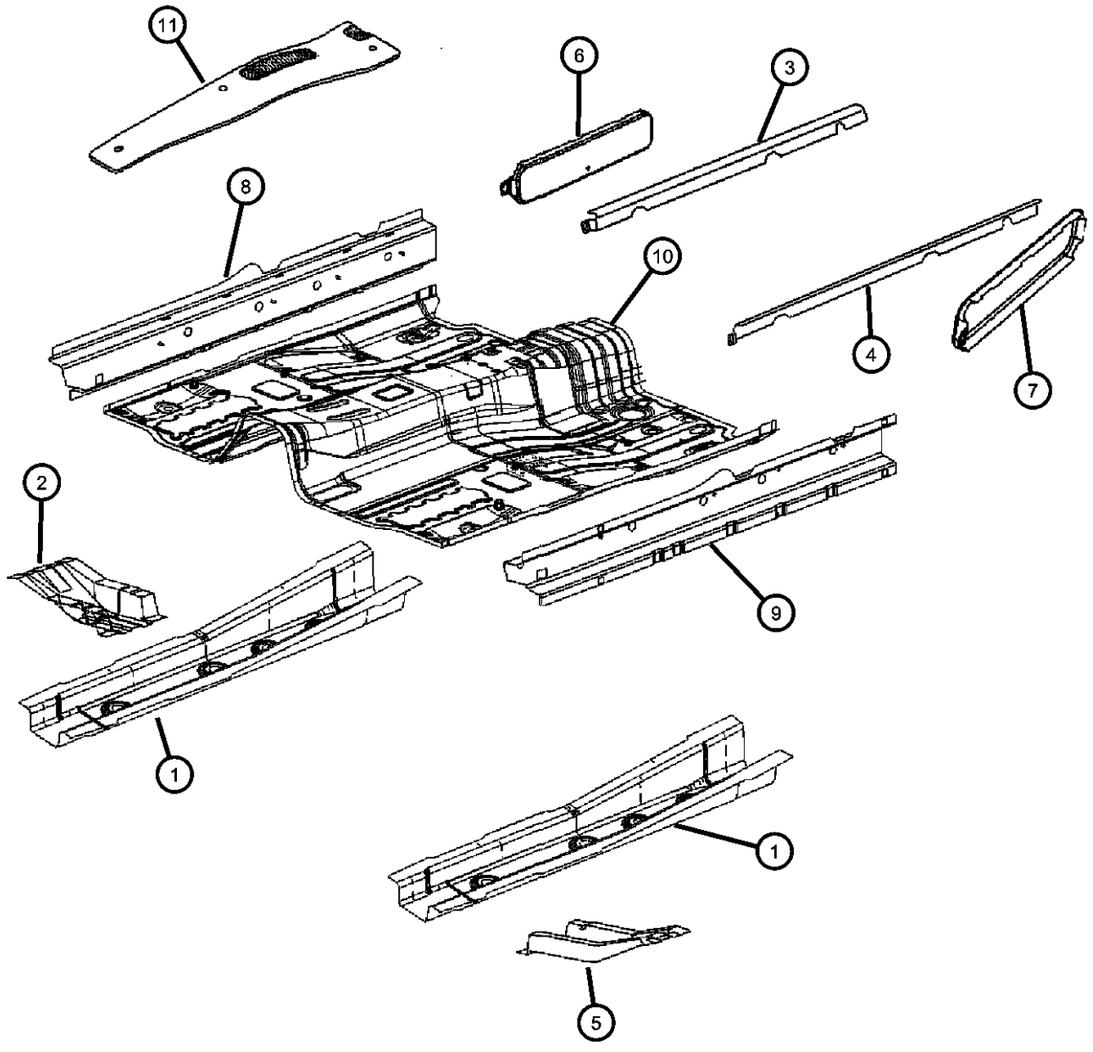

ITEM	PART NUMBER	QTY	LINE	SERIES	BODY	ENGINE	TRANS	TRIM	DESCRIPTION
1	05115439AA	2							SIDEMEMBER, FloorRight & Left
2	05115444AA	1							REINFORCEMENT, Floor PanRight
3	05115988AA	1							REINFORCEMENT, SillRight
4	05115989AA	1							REINFORCEMENT, SillLeft
5	05115445AA	1							REINFORCEMENT, Floor PanLeft
6	05115896AA	1							REINFORCEMENT, SillRight
7	05115897AA	1							REINFORCEMENT, SillLeft
8	05115050AA	1							SILL, Front FloorRight
9	05115051AA	1							SILL, Front FloorLeft
10	05183908AA	1							PAN, Front Floor
11									SILENCER, Floor Pan
	05115990AA	1							Right
	05115991AA	1							Left
-12	06508463AA	4							NUT, Plastic
-13	06504650	AR							CAP, Bolt Cover

COMPASS/PATRIOT (MK)

SERIES	LINE	BODY	ENGINE	TRANSMISSION
H = HIGHLINE L = LOWLINE P = PREMIUM	J = JEEP - 4WD T = JEEP - 2WD	49 = HATCHBACK TYPE #2 74 = SPORT UTILITY 4-DR TYPE #4	ED3 = 2.4L 4 Cyl DOHC 16V Dual VVT Engine	DD7 = 5-Speed Manual T355 Transmission DEF = 6-Speed Manual Aisin BG6 Trans DAV = Continuously Variable Transmission DAW = Cont.Var. w/Off-Rd Crawl Ratio Trans

AR = use ase required - = Non illustrrated part

Rear Floor Pan
Figure SMK-220

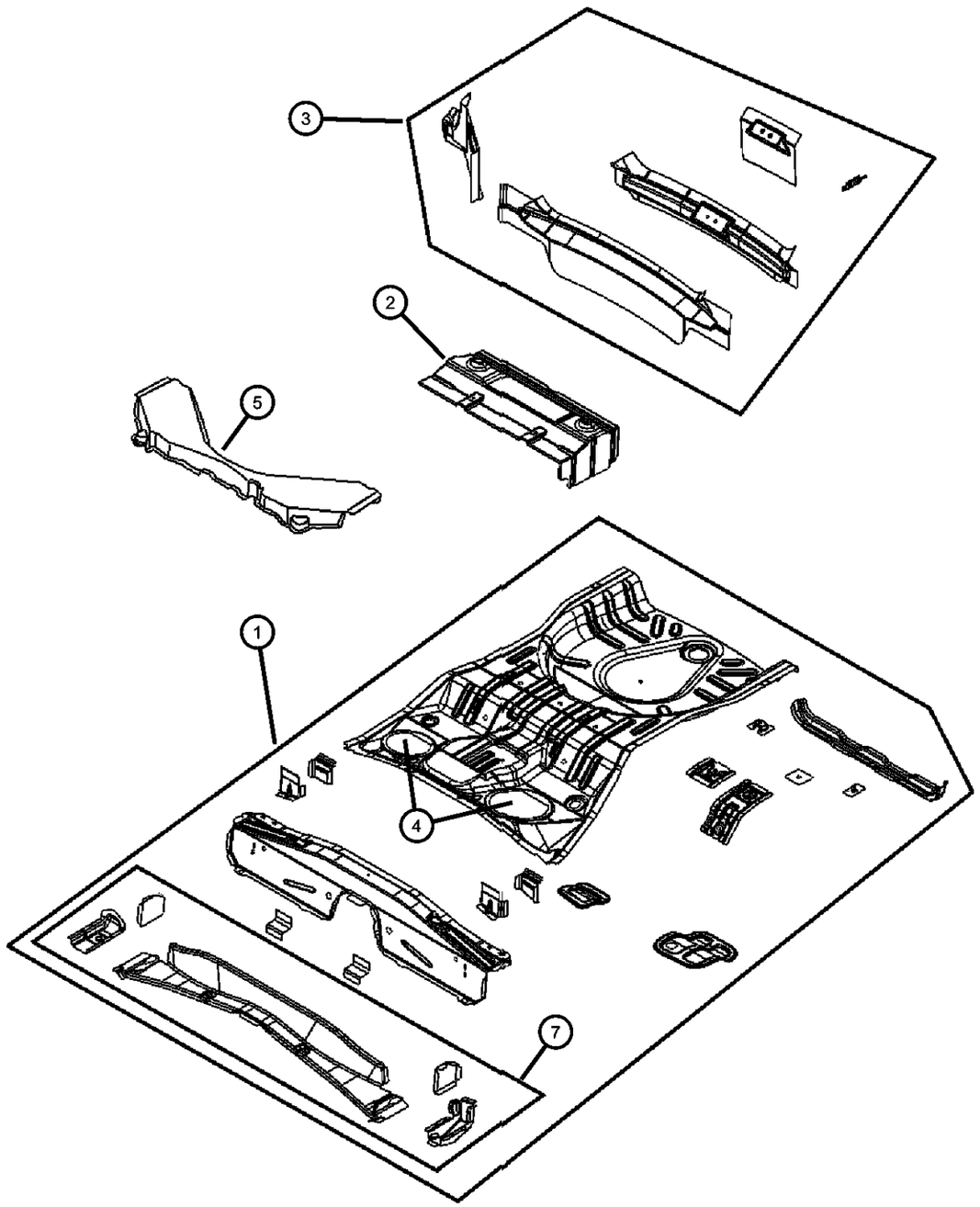

ITEM	PART NUMBER	QTY	LINE	SERIES	BODY	ENGINE	TRANS	TRIM	DESCRIPTION
1	05183909AA	1							PAN, Rear Floor
2	04673702AA	1							SHIELD, Heat
3									PANEL, Deck Lower Rear Closure
	05160150AC	1	J, T, U		74				
	05074974AA	1	J, T, U		49				
4									COVER, Fuel Pump Access
	05160318AA	1	J, T, U		49, 74				Right
	05160319AA	1	J, T, U		49, 74				Left
5	05291785AA	1	J, T, U		49, 74				SILENCER, Rear Shelf
-6	05115657AB	1							BEAM ASSY, Side Impact
7	05115549AA	1							CROSSMEMBER, Rear Seat
-8	05115611AA	1	J, T, U		49, 74				SUPPORT, Bumper
-9	05291886AA	1	J, T, U		49, 74				SILENCER, Spare Tire Well
-10	05291885AA	1	J, T, U		49, 74				SILENCER, Mid Floor Underseat

COMPASS/PATRIOT (MK)

SERIES	LINE	BODY	ENGINE	TRANSMISSION
H = HIGHLINE L = LOWLINE P = PREMIUM	J = JEEP - 4WD T = JEEP - 2WD	49 = HATCHBACK TYPE #2 74 = SPORT UTILITY 4-DR TYPE #4	ED3 = 2.4L 4 Cyl DOHC 16V Dual VVT Engine	DD7 = 5-Speed Manual T355 Transmission DEF = 6-Speed Manual Aisin BG6 Trans DAV = Continuously Variable Transmission DAW = Cont.Var. w/Off-Rd Crawl Ratio Trans

Underbody Shields
Figure SMK-230

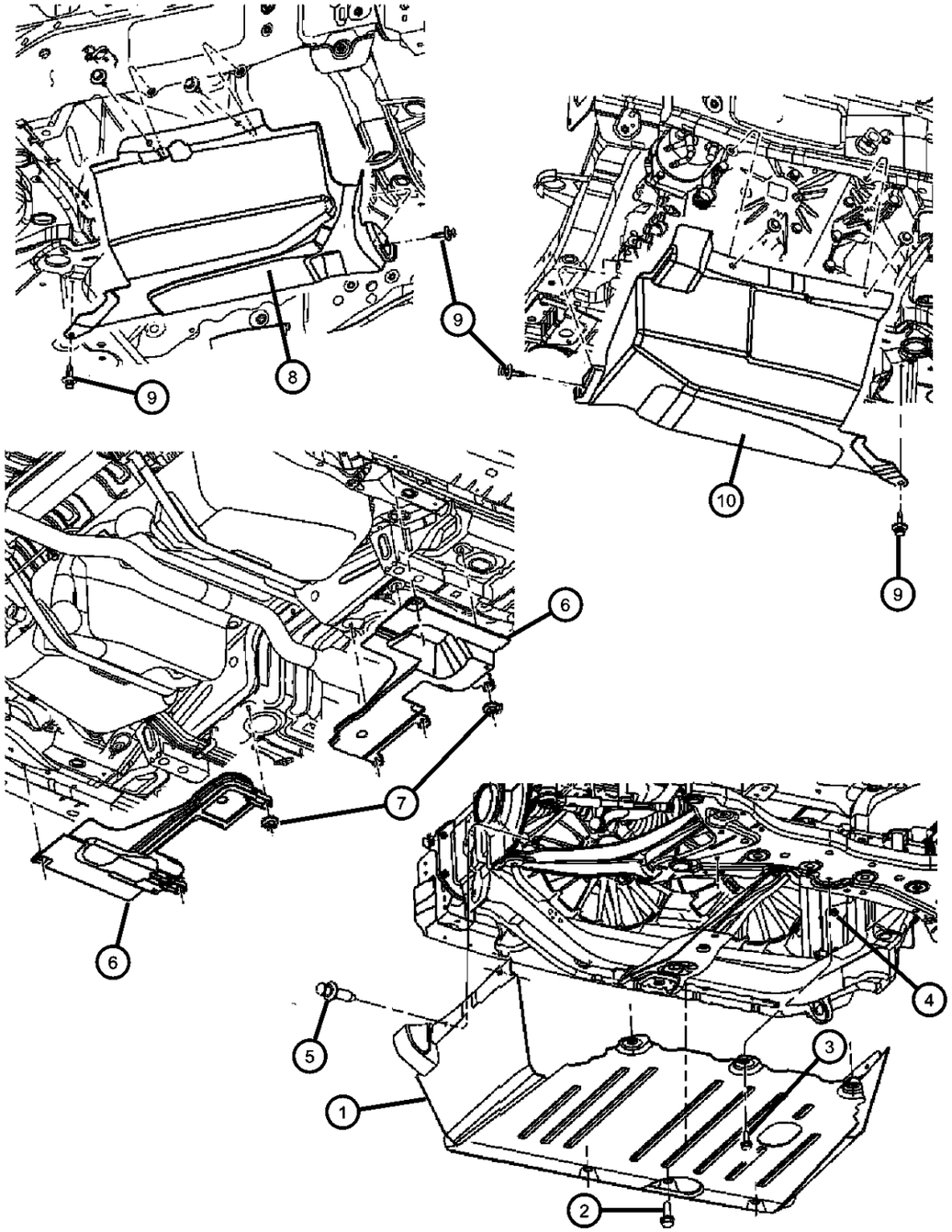

ITEM	PART NUMBER	QTY	LINE	SERIES	BODY	ENGINE	TRANS	TRIM	DESCRIPTION
1									BELLY PAN, Front
	05116372AB	1	J, T, U		74				
	05303981AB	1							
2	06105098AA	3							SCREW AND WASHER, Hex Head, M6x1x25
3									SCREW AND WASHER, Hex Head, M6x1x20
	06104366AA	2	J, T, U		49				
		1	J, T, U		74				
4	06104885AA	2			49				RIVET
5	05160260AA	4							PIN, Push
6									PANEL, Close out
	05116058AA	1							Right
	05116059AA	1							Left
7	06104725AA	7							NUT AND WASHER, M6x1
8	05116057AB	1							SHIELD, Accessory Drive
9	06502790	2							RETAINER
10	05116330AA	1							SHIELD, Transmission

COMPASS/PATRIOT (MK)

SERIES	LINE	BODY	ENGINE	TRANSMISSION
H = HIGHLINE L = LOWLINE P = PREMIUM	J = JEEP - 4WD T = JEEP - 2WD	49 = HATCHBACK TYPE #2 74 = SPORT UTILITY 4-DR TYPE #4	ED3 = 2.4L 4 Cyl DOHC 16V Dual VVT Engine	DD7 = 5-Speed Manual T355 Transmission DEF = 6-Speed Manual Aisin BG6 Trans DAV = Continuously Variable Transmission DAW = Cont.Var. w/Off-Rd Crawl Ratio Trans

AR = use ase required - = Non illustrrated part

Plugs & Tapes
Figure SMK-310

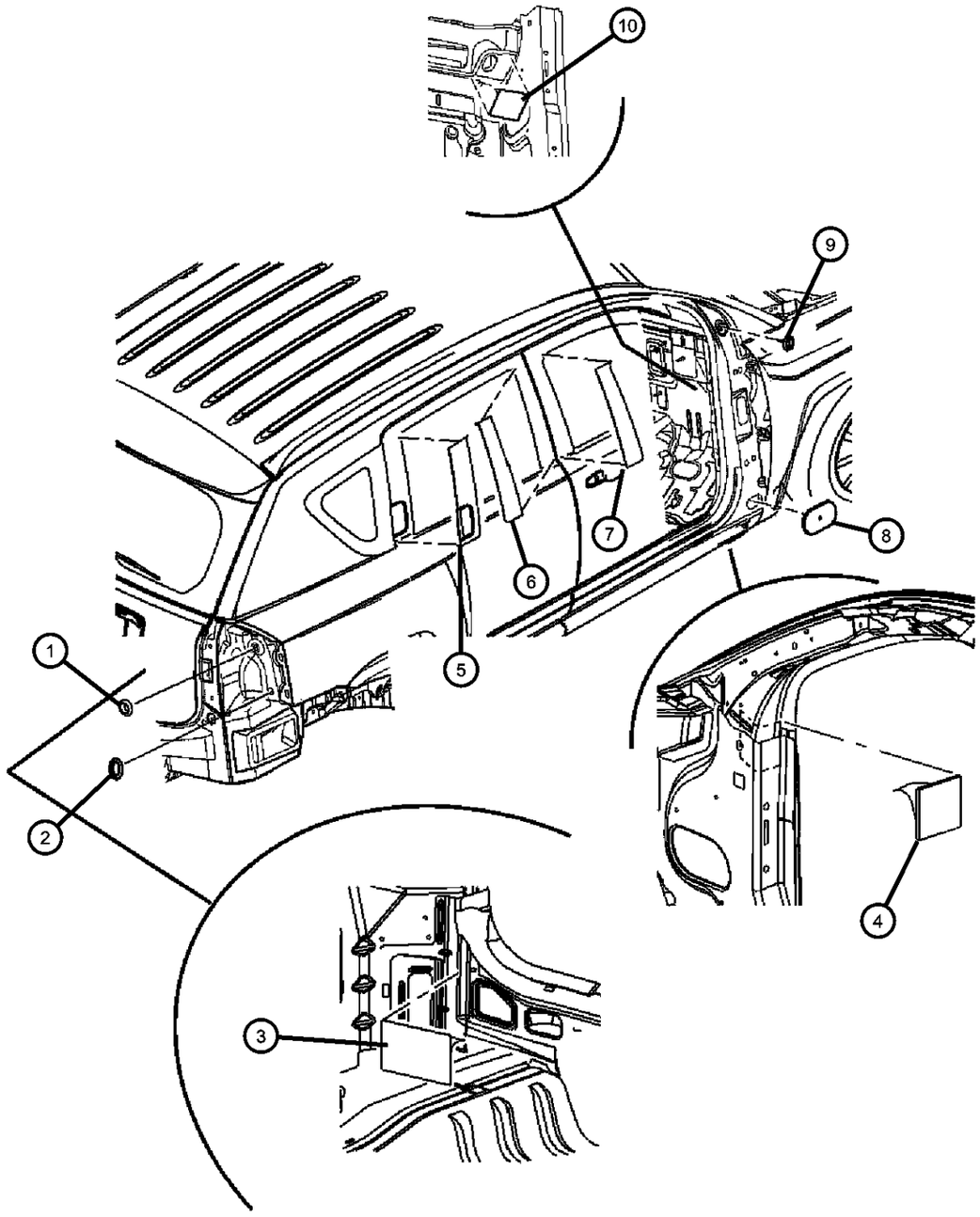

ITEM	PART NUMBER	QTY	LINE	SERIES	BODY	ENGINE	TRANS	TRIM	DESCRIPTION
1	05160283AA	2							PLUG, Body, 19X25 PLASTIC
2	02860332	2							PLUG, Anti-Rattle
3	05160289AA	2							TAPE, Sealing, Foil Back
4	05160288AA	2							TAPE, Sealing, Foil Back
5									TAPE, C Pillar
	05116390AA	1							Right
	05116391AA	1							Left
6									TAPE, Black Out, B Pillar
	05116386AA	1							Right
	05116387AA	1							Left
7									TAPE, Front Door
	05116388AA	1							Right
	05116389AA	1							Left
8	05160307AA	2							PLUG, Body, Rubber
9	02860332	2							PLUG, Anti-Rattle
10	05160288AA	2							TAPE, Sealing, Foil Back

COMPASS/PATRIOT (MK)

SERIES	LINE	BODY	ENGINE	TRANSMISSION
H = HIGHLINE L = LOWLINE P = PREMIUM	J = JEEP - 4WD T = JEEP - 2WD	49 = HATCHBACK TYPE #2 74 = SPORT UTILITY 4-DR TYPE #4	ED3 = 2.4L 4 Cyl DOHC 16V Dual VVT Engine	DD7 = 5-Speed Manual T355 Transmission DEF = 6-Speed Manual Aisin BG6 Trans DAV = Continuously Variable Transmission DAW = Cont.Var. w/Off-Rd Crawl Ratio Trans

AR = use ase required - = Non illustrrated part

Fender, Front
Figure SMK-410

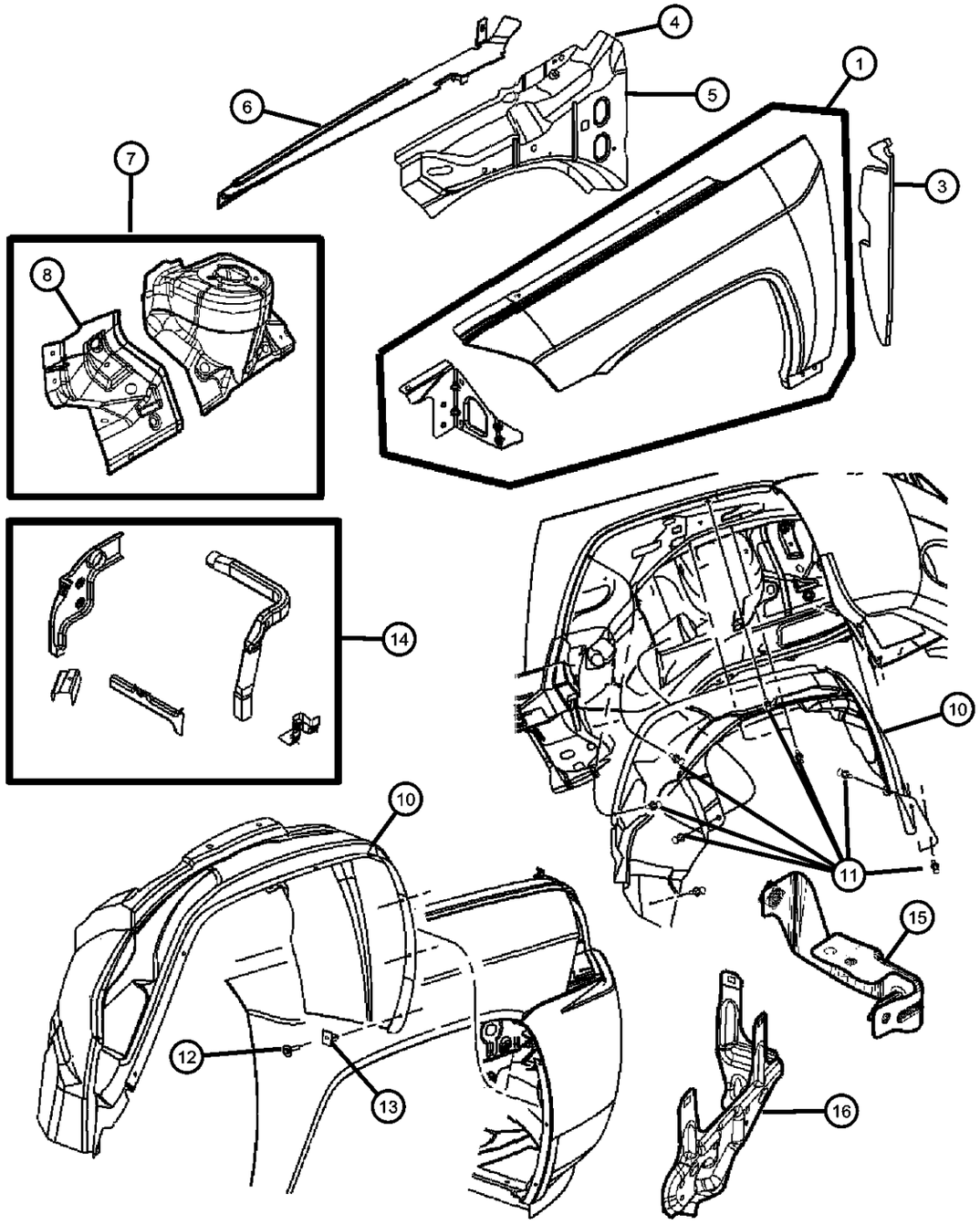

ITEM	PART NUMBER	QTY	LINE	SERIES	BODY	ENGINE	TRANS	TRIM	DESCRIPTION
1									FENDER, Front
	05054316AA	1	J, T, U		74				Right
	05054317AA	1	J, T, U		74				Left
	05054354AA	1	J, T, U		74				Export, Right
	05054355AA	1	J, T, U		74				Export, Left
	05115662AC	1	J, T, U		49				Right
	05115663AC	1	J, T, U		49				Left
	05160036AC	1	J, T, U		49				Export, Right
	05160037AC	1	J, T, U		49				Export, Left
-2	06506199AA	2							NUT, Square, C/Member radiator to fender
3	05074924AC	2	J, T, U		49				SILENCER, Fender to Hinge Pillar
4									BEAM, Inner Load Path
	68002032AA	1	J, T, U		49, 74				Right
	68002033AA	1	J, T, U		49, 74				Left
5									BEAM, Outer Load Path
	68002036AA	1	J, T, U		49				Right
	68002037AA	1	J, T, U		49				Left
	68019752AA	1	J, T, U		74				Right
	68019753AA	1	J, T, U		74				Left
6	68019753AA	1							PANEL, Cancelled , No longer available, (NOT SERVICED)
7									WHEELHOUSE, Front Inner
	68002058AA	1	J, T, U		49, 74				Right
	68002059AA	1	J, T, U		49, 74				Left
8									PANEL, Fender Side Shield
	68002060AA	1	J		49				Right
	68002061AA	1	J		49				Left
-9									SILENCER, Shock Tower
	05115766AB	1							Right
	05115767AB	1							Left
10									SHIELD, Splash
	05116244AB	1	J, T, U		74				Right
	05116245AB	1	J, T, U		74				Left

COMPASS/PATRIOT (MK)

SERIES	LINE	BODY	ENGINE	TRANSMISSION
H = HIGHLINE L = LOWLINE P = PREMIUM	J = JEEP - 4WD T = JEEP - 2WD	49 = HATCHBACK TYPE #2 74 = SPORT UTILITY 4-DR TYPE #4	ED3 = 2.4L 4 Cyl DOHC 16V Dual VVT Engine	DD7 = 5-Speed Manual T355 Transmission DEF = 6-Speed Manual Aisin BG6 Trans DAV = Continuously Variable Transmission DAW = Cont.Var. w/Off-Rd Crawl Ratio Trans

Fender, Front
Figure SMK-410

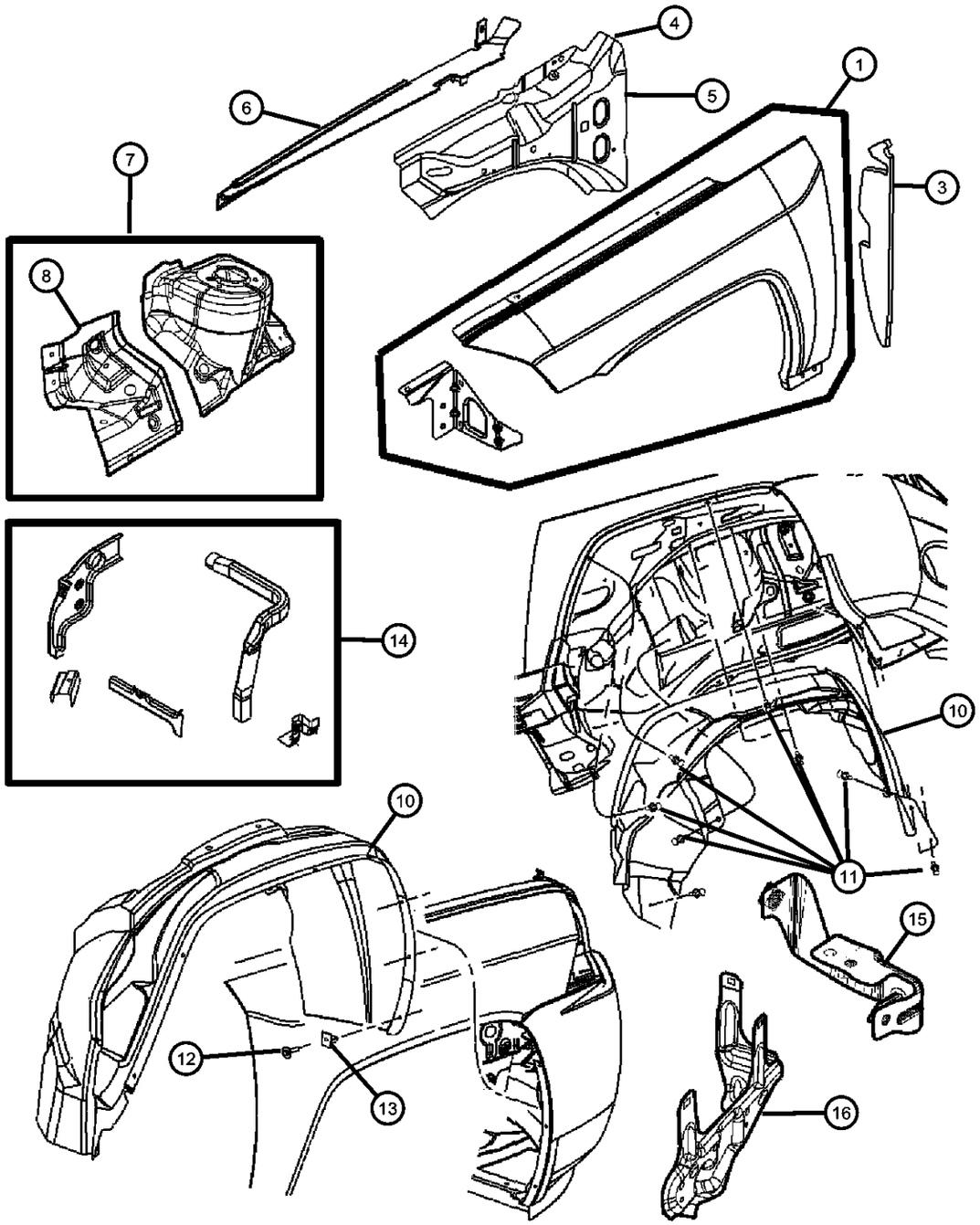

ITEM	PART NUMBER	QTY	LINE	SERIES	BODY	ENGINE	TRANS	TRIM	DESCRIPTION
	05303870AB	1	J, T, U		49				Right
	05303871AB	1	J, T, U		49				Left
11	05160260AA	6							PIN, Push
12	06507238AA	6							SCREW, Hex Flange Head Tapping, M4.2x1.7x25
13	06035401	2							NUT, Snap In, .164-18
14									REINFORCEMENT, Fender
	68001966AB	1	J, T, U		49				Right
	68001967AA	1	J, T, U		49				Left
	68019180AA	1	J, T, U		74				Right
	68019181AA	1	J, T, U		74				Left
15	05115400AA	1							BRACKET, Power Steering Reservoir
16	05107070AA	1	J, T, U		49, 74				BRACKET, Power Distribution Center

COMPASS/PATRIOT (MK)

SERIES	LINE	BODY	ENGINE	TRANSMISSION
H = HIGHLINE	J = JEEP - 4WD	49 = HATCHBACK TYPE #2	ED3 = 2.4L 4 Cyl DOHC 16V Dual VVT Engine	DD7 = 5-Speed Manual T355 Transmission
L = LOWLINE	T = JEEP - 2WD	74 = SPORT UTILITY 4-DR TYPE #4		DEF = 6-Speed Manual Aisin BG6 Trans
P = PREMIUM				DAV = Continuously Variable Transmission
				DAW = Cont.Var. w/Off-Rd Crawl Ratio Trans

Hood
Figure SMK-510

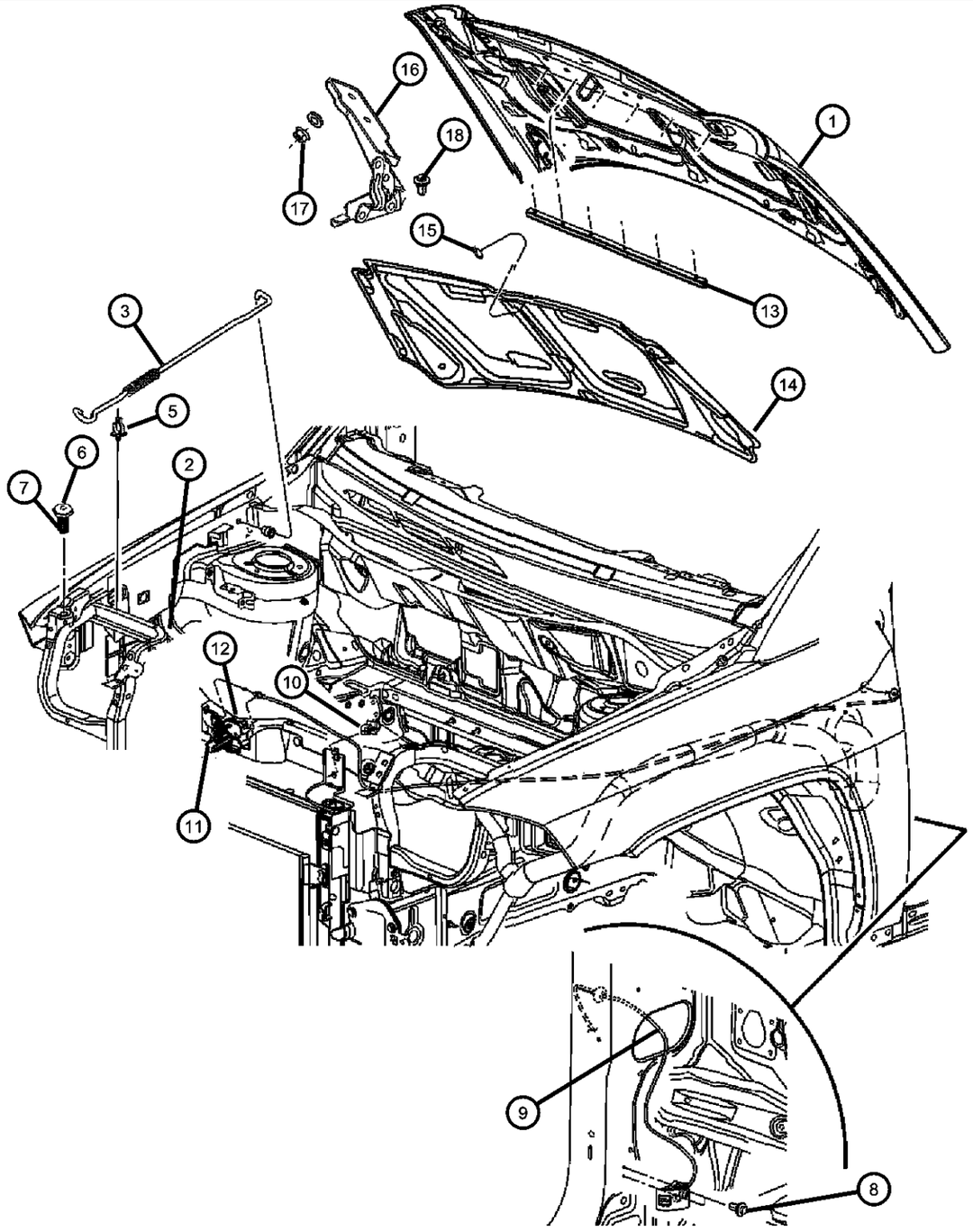

ITEM	PART NUMBER	QTY	LINE	SERIES	BODY	ENGINE	TRANS	TRIM	DESCRIPTION
1									HOOD
	05054330AB	1	J, T, U		74				
	05074926AB	1	J, T, U		49				Up to 6/4/07
2	04716486	1							BUSHING, Hood Prop Rod Pivot
3									PROP, Hood
	05054352AC	1	J, T, U		49				Up to 6/4/07
		1	J, T, U		74				Up to 2/9/07
	05160367AA	1	J, T, U		74				After 2/9/07
	05160367AB	1	J, T, U		49				After 6/4/07
-4	05008284AB	1							ISOLATOR, Hood Prop Rod
5	05027550AC	1	J, T, U		49, 74				CLIP, Prop Rod
6	05160047AA	4							BUMPER, Door Overslam
7	04103165	2							BUMPER, Hood
8	04103165	2							SCREW, Hex Flange Head, M5x0.80x20.00, (NOT SERVICED)
9	05074169AD	1							RELEASE, Hood Latch
10	06503794	1							CLIP, M6.3x11.2
11									LATCH, Hood
	05160032AB	1	J, T, U		49				
		1	J, T, U		74				
12	05074712AA	1							REINFORCEMENT, Hood Release
13									WEATHERSTRIP, Hood to Radiator
	05067756AB	1	J, T, U		74				
	05115671AA	1	J, T, U		49				
14									SILENCER, Hood
	05074934AB	1	J, T, U		49				
	05116436AA	1	J, T, U		74				
15	06506293AA	2							PIN, Push
16									HINGE, Hood
	04589116AD	1	J		49				Right
	04589117AD	1	J		49				Left
	55399000AB	1	J, T, U		74				Right
	55399001AB	1	J, T, U		74				Left

COMPASS/PATRIOT (MK)

SERIES	LINE	BODY	ENGINE	TRANSMISSION
H = HIGHLINE L = LOWLINE P = PREMIUM	J = JEEP - 4WD T = JEEP - 2WD	49 = HATCHBACK TYPE #2 74 = SPORT UTILITY 4-DR TYPE #4	ED3 = 2.4L 4 Cyl DOHC 16V Dual VVT Engine	DD7 = 5-Speed Manual T355 Transmission DEF = 6-Speed Manual Aisin BG6 Trans DAV = Continuously Variable Transmission DAW = Cont.Var. w/Off-Rd Crawl Ratio Trans

AR = use ase required - = Non illustrrated part

Hood
Figure SMK-510

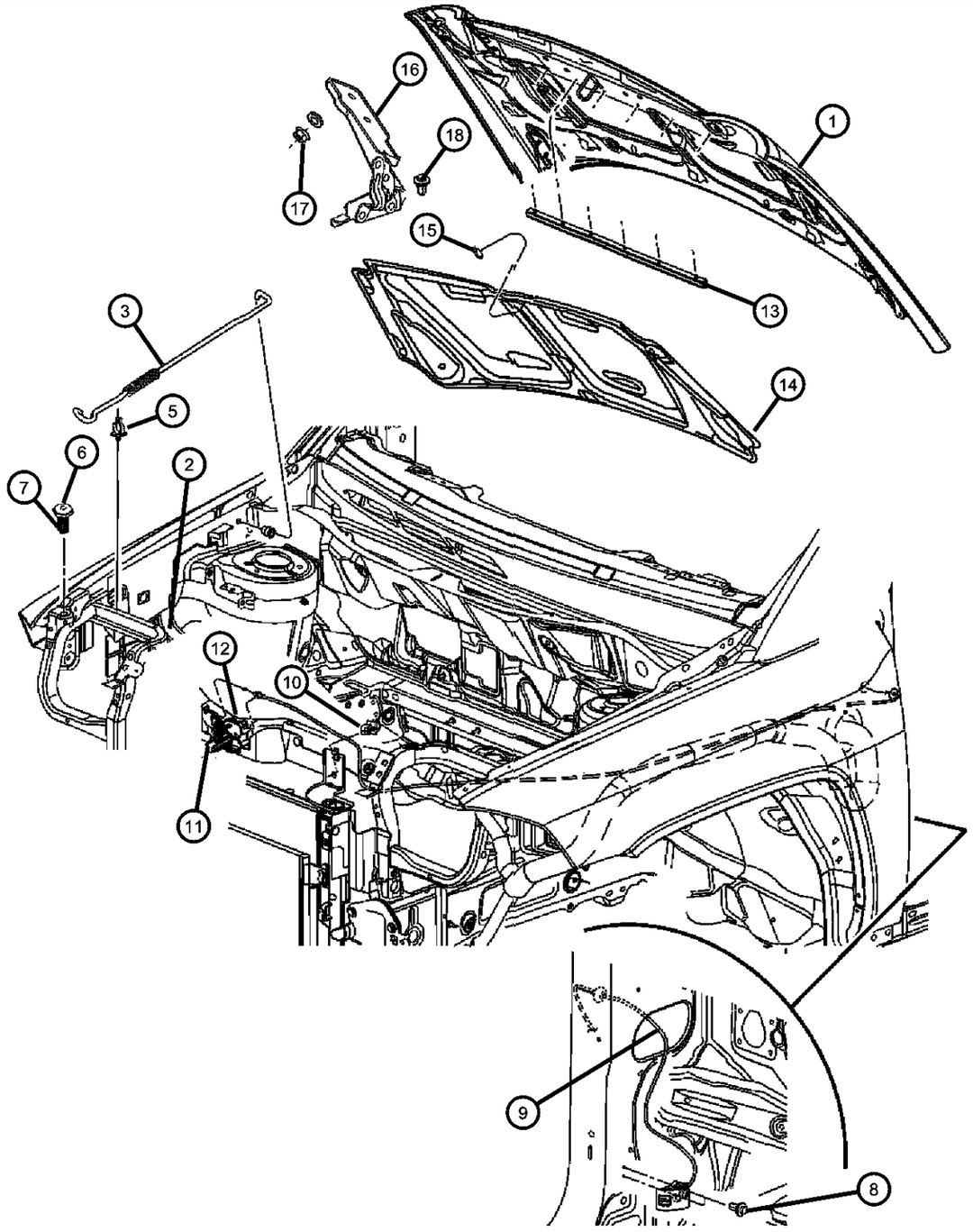

ITEM	PART NUMBER	QTY	LINE	SERIES	BODY	ENGINE	TRANS	TRIM	DESCRIPTION
17	06104716AA	4							NUT
18	06104386AA	4							SCREW, M8x1.25x25

COMPASS/PATRIOT (MK)

SERIES	LINE	BODY	ENGINE	TRANSMISSION
H = HIGHLINE L = LOWLINE P = PREMIUM	J = JEEP - 4WD T = JEEP - 2WD	49 = HATCHBACK TYPE #2 74 = SPORT UTILITY 4-DR TYPE #4	ED3 = 2.4L 4 Cyl DOHC 16V Dual VVT Engine	DD7 = 5-Speed Manual T355 Transmission DEF = 6-Speed Manual Aisin BG6 Trans DAV = Continuously Variable Transmission DAW = Cont.Var. w/Off-Rd Crawl Ratio Trans

AR = use ase required - = Non illustrrated part

Cowl and Dash Panel
Figure SMK-610

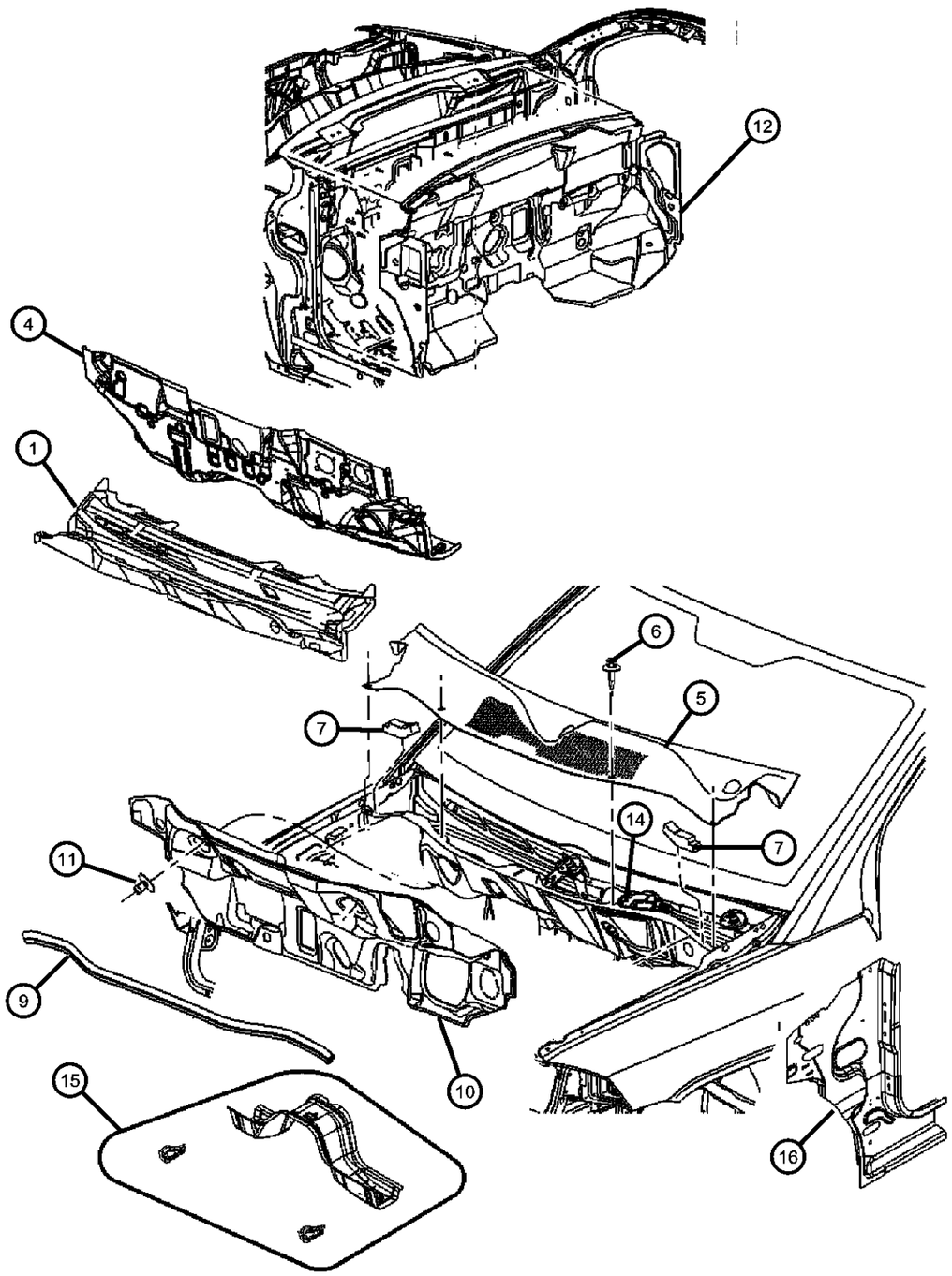

ITEM	PART NUMBER	QTY	LINE	SERIES	BODY	ENGINE	TRANS	TRIM	DESCRIPTION
1									PANEL, Cowl
	05115235AA	1	J, T		49				
	05160172AA	1	J, T		74				
	05160186AA	1	U		74				
-2	05291796AA	1							STUFFER
-3									BAFFLE, Air Inlet
	05116408AB	1	J, T		74				
	05116409AB	1	U		74				
4									PANEL, Dash
	05183758AB	1	U						
	05183759AB	1	J, T						
5									SCREEN, Cowl Top
	04879446AC	1	J, T		74				
	04879447AC	1	U		74				
	05303964AC	1	J, T		49				
6	06502790	4							RETAINER
7	05160046AA	2	J, T, U		49, 74				SEAL, HOOD HINGE TO BODY SIDE
-8									MUCKET, Cowl Panel Ledge, Seal
	05116420AA	1	U		49				
	05116421AA	1	J, T		49				
9									SEAL, Cowl Screen to Hood Inner Panel
	05030129AA	1	J, T, U		49				
	05067748AA	1	J, T, U		74				
10	05115851AB	1	J, T		49, 74				SILENCER, Engine Side
11	05160241AA	4							CLIP, Silencer
12									SILENCER, Dash Panel
	05115816AA	1	J, T						
	05115816AB	1	J, T						With [ECD]
	05115818AA	1	U						
	05115818AC	1	U		49, 74				With [ECD]
	05291809AB	1	J, T		49				With [EBA] [ECN] [ED3]
		1	J		49				With [ED3]

COMPASS/PATRIOT (MK)

SERIES	LINE	BODY	ENGINE	TRANSMISSION
H = HIGHLINE L = LOWLINE P = PREMIUM	J = JEEP - 4WD T = JEEP - 2WD	49 = HATCHBACK TYPE #2 74 = SPORT UTILITY 4-DR TYPE #4	ED3 = 2.4L 4 Cyl DOHC 16V Dual VVT Engine	DD7 = 5-Speed Manual T355 Transmission DEF = 6-Speed Manual Aisin BG6 Trans DAV = Continuously Variable Transmission DAW = Cont.Var. w/Off-Rd Crawl Ratio Trans

AR = use ase required - = Non illustrrated part

Cowl and Dash Panel
Figure SMK-610

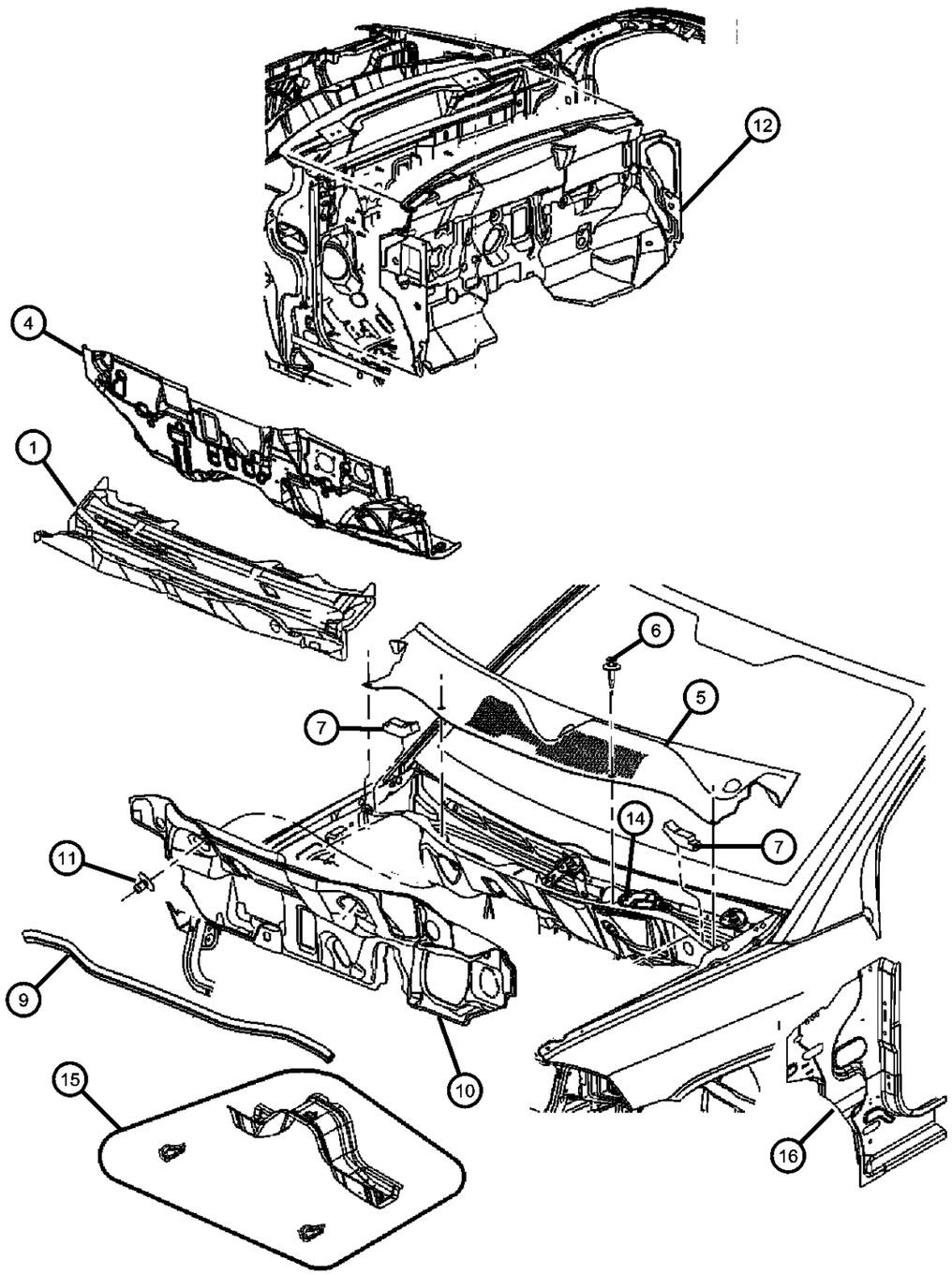

ITEM	PART NUMBER	QTY	LINE	SERIES	BODY	ENGINE	TRANS	TRIM	DESCRIPTION
	05291811AA	1	J, T		74				With [EBA] [ECN] [ED3]
	05291812AA	1	J, T		74				With [ECD]
	05291813AA	1	U		74				With [EBA] [ECN] [ED3]
	05291816AA	1	U		74				With [ECD]
-13	06503339	2							NUT, Plastic
14									CROSSMEMBER, Dash, Upper
	05115456AB	1	U						
	05115464AA	1	J, T						
15	05115450AA	1	J, T, U		49, 74				CROSSMEMBER, Dash, Lower
16									PANEL, Cowl Side
	05074998AB	1	J, T, U		49				Right
	05074999AB	1	J, T, U		49				Left
	05160192AB	1	J, T, U		74				Right
	05160193AB	1	J, T, U		74				Left
-17	05160291AA	2							TAPE, Sealing, Foil Back
-18	05116454AA	1	J, T		49				SEAL, PLENUM
-19	05116454AA	1	J, T		49				SEAL, PLENUM

COMPASS/PATRIOT (MK)

SERIES	LINE	BODY	ENGINE	TRANSMISSION
H = HIGHLINE L = LOWLINE P = PREMIUM	J = JEEP - 4WD T = JEEP - 2WD	49 = HATCHBACK TYPE #2 74 = SPORT UTILITY 4-DR TYPE #4	ED3 = 2.4L 4 Cyl DOHC 16V Dual VVT Engine	DD7 = 5-Speed Manual T355 Transmission DEF = 6-Speed Manual Aisin BG6 Trans DAV = Continuously Variable Transmission DAW = Cont.Var. w/Off-Rd Crawl Ratio Trans

AR = use ase required - = Non illustrrated part

Glass, Windshield, Backlite, Quarter Window, Rear View Mirror [49] Body
Figure SMK-710

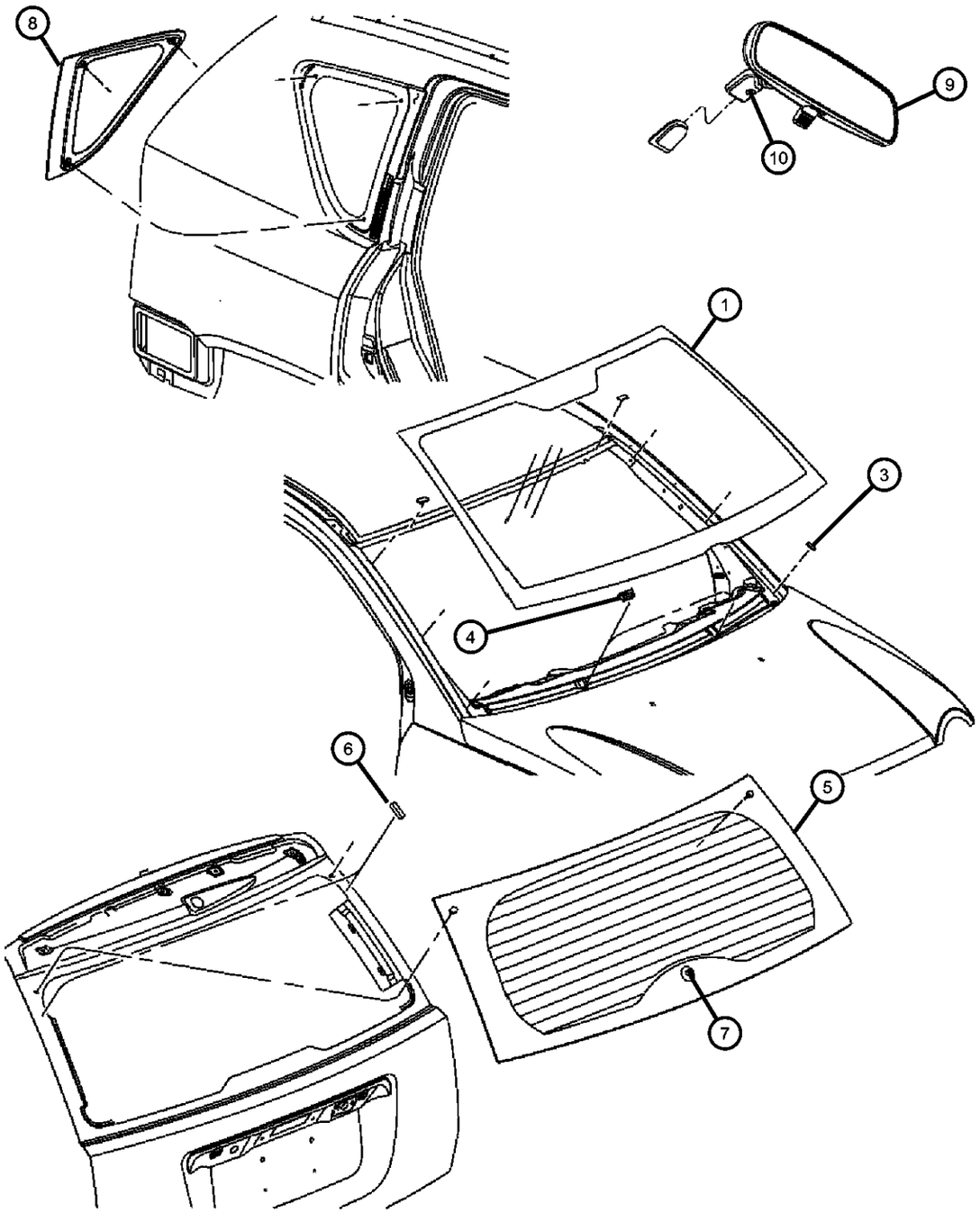

ITEM	PART NUMBER	QTY	LINE	SERIES	BODY	ENGINE	TRANS	TRIM	DESCRIPTION
Sales Codes:									
[GNA] = Rear View Day/Night									
[GNK] = Rear View Auto Dim									
[RSP] = Uconnect Hands Free Communication									
1	05191429AA	1							WINDSHIELD
	DW01662GTN								Collision Replacement Glass
-2	04864015	2							INSTALLATION PACKAGE, Windshield Glass
3	04278662	6							SPACER
4	55276549AA	2							SPACER, Windshield
5									BACKLITE
	05074912AB	1							With [GAM] , without [GEG]
	05074913AB	1							With [GEG]
6	05020386AC	2							SPACER, Liftgate Glass
7	05116200AA	1							GROMMET, Rear Wiper Motor
8									GLASS, Quarter Window
	05191234AA	1							With [GAM] , without [GEG], Right
	DQ11187GTY								Collision Replacement Glass
	05191235AA	1							With [GAM] , without [GEG], Left
	DQ11188GTY								Collision Replacement Glass
	05191250AA	1							With [GEG], Right
	DQ11187YPY								Collision Replacement Glass
	05191251AA	1							With [GEG], Left
	DQ11188YPY								Collision Replacement Glass
9									MIRROR, Inside Rear View
	04805332AC	1							With Sales Code [GNA] Day/Night Mirror
	04805572AA	1							With Sales Code [GNK] Auto Dim Mirror
	05064017AD	1							With Sales Codes [GNK] Auto Dim Mirror and [RSP] Uconnect Hands Free Communication
10	05073472AA	1	J		49				SCREW

COMPASS/PATRIOT (MK)

SERIES	LINE	BODY	ENGINE	TRANSMISSION
H = HIGHLINE	J = JEEP - 4WD	49 = HATCHBACK TYPE #2	ED3 = 2.4L 4 Cyl DOHC 16V Dual VVT Engine	DD7 = 5-Speed Manual T355 Transmission
L = LOWLINE	T = JEEP - 2WD	74 = SPORT UTILITY 4-DR TYPE #4		DEF = 6-Speed Manual Aisin BG6 Trans
P = PREMIUM				DAV = Continuously Variable Transmission
				DAW = Cont.Var. w/Off-Rd Crawl Ratio Trans

Glass , Windhield , Backlite , Quater Window , Rear View Mirror - [74] Body
Figure SMK-720

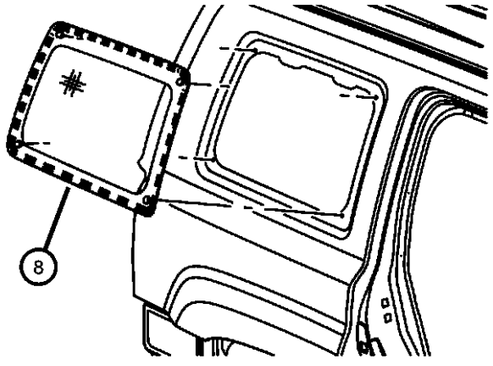

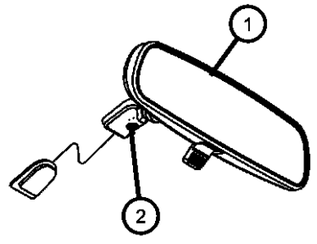

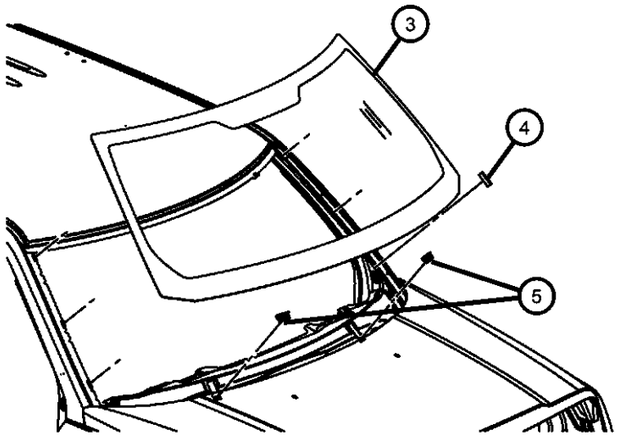

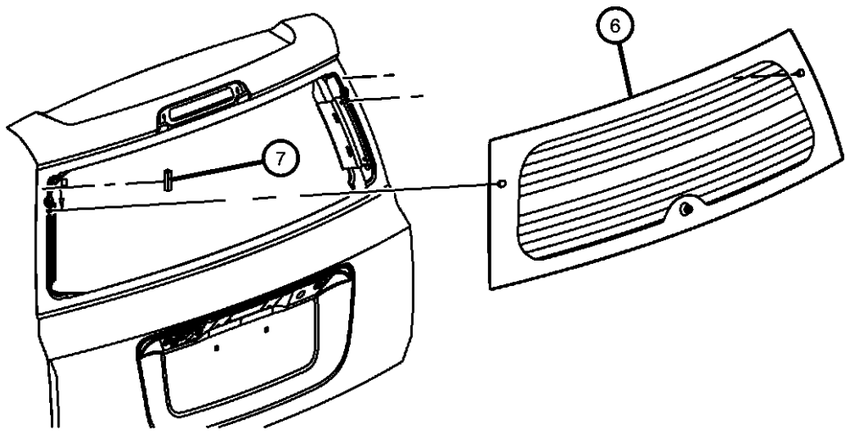

ITEM	PART NUMBER	QTY	LINE	SERIES	BODY	ENGINE	TRANS	TRIM	DESCRIPTION
1									MIRROR, Inside Rear View
	04805332AC	1	J, T, U		49, 74				With [GNA]
	04805572AC	1	J, T, U		49, 74				With [GNK] , without [RSP]
	05064017AE	1	J, T, U		49, 74				With [GNK] [RSP]
2	05073472AA	1							SCREW
3	05160173AA	1	J, T, U		74				WINDSHIELD
4	04278662	2							SPACER
5	55276549AA	2	J, T, U		49, 74				SPACER, Windshield
6									BACKLITE
	05155452AB	1	J, T, U		74				With [GEG]
	DB11038YPY								Collision Replacement Glass
	05155453AB	1	J, T, U		74				With [GAM] , without [GEG]
	DB11308GTY								Collision Replacement Glass
7	04278662	2							SPACER
8									GLASS, Quarter Window
	68003724AA	1	J, T, U		74				With [GAM] , Without [GEG], Right
	DQ11036GTN								Collision Replacement Glass
	68003725AA	1	J, T, U		74				With [GAM] , Without [GEG], Left
	DQ11037GTN								Collision Replacement Glass
	68003726AA	1	J, T, U		74				With [GEG], Right
	DQ11036YPN								Collision Replacement Glass
	68003727AA	1	J, T, U		74				With [GEG], Left
	DQ11037YPN								Collision Replacement Glass

COMPASS/PATRIOT (MK)

SERIES	LINE	BODY	ENGINE	TRANSMISSION
H = HIGHLINE L = LOWLINE P = PREMIUM	J = JEEP - 4WD T = JEEP - 2WD	49 = HATCHBACK TYPE #2 74 = SPORT UTILITY 4-DR TYPE #4	ED3 = 2.4L 4 Cyl DOHC 16V Dual VVT Engine	DD7 = 5-Speed Manual T355 Transmission DEF = 6-Speed Manual Aisin BG6 Trans DAV = Continuously Variable Transmission DAW = Cont.Var. w/Off-Rd Crawl Ratio Trans

AR = use ase required - = Non illustrrated part

Aperture Panel
Figure SMK-810

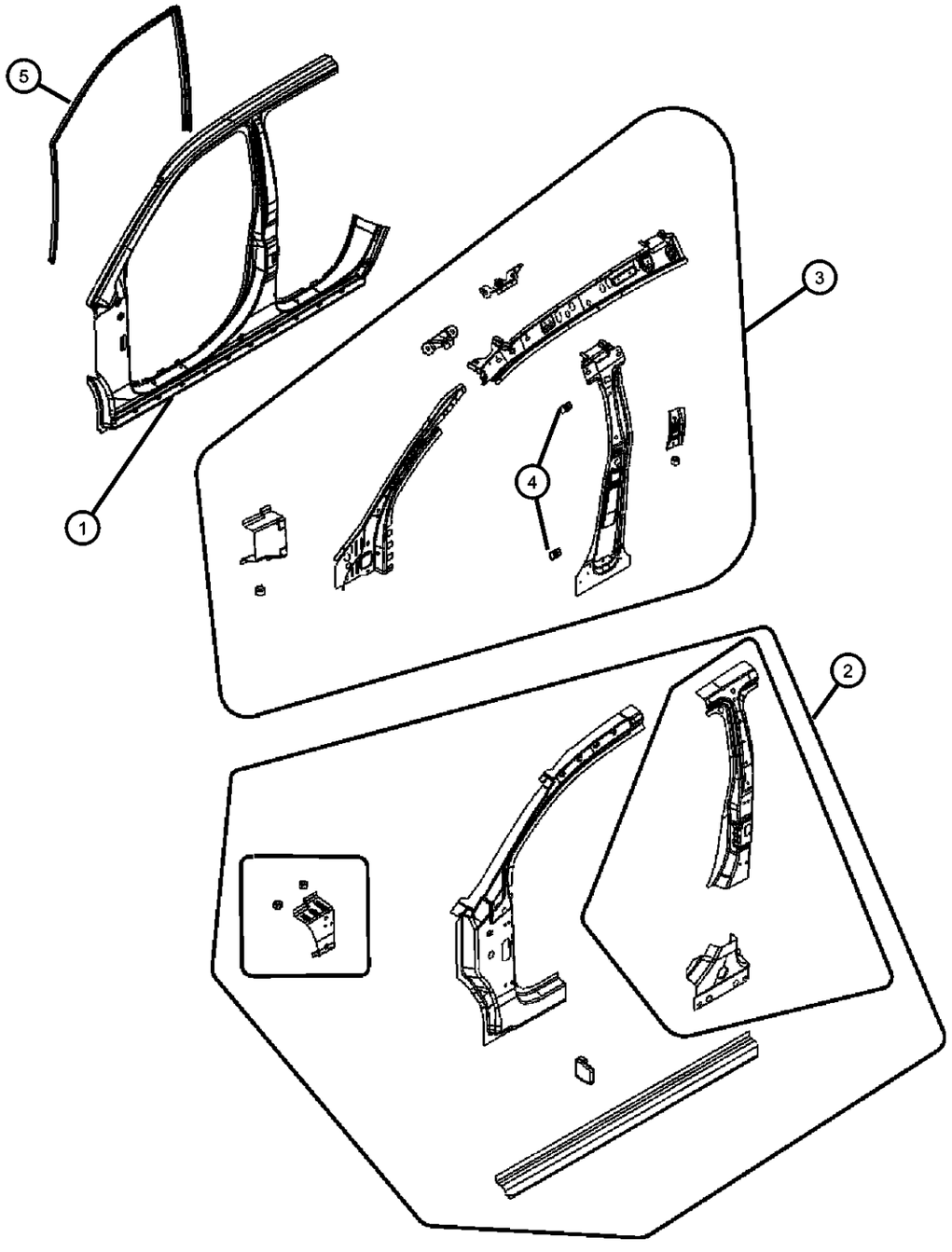

ITEM	PART NUMBER	QTY	LINE	SERIES	BODY	ENGINE	TRANS	TRIM	DESCRIPTION
1									PANEL PACKAGE, Body Side Aperture Front, Outer Skin
	68001970AA	1	J, T, U		49				Right
	68001971AA	1	J, T, U		49				Left
	68019176AA	1	J, T, U		74				Right
	68019177AA	1	J, T, U		74				Left
2									PANEL, Body Side Aperture Inner
	05115918AB	1	J, T, U		49				Right
	05115919AB	1	J, T, U		49				Left
	05160098AB	1	J, T, U		74				Right
	05160099AB	1	J, T, U		74				Left
3									REINFORCEMENT PACKAGE, Bode Side Aperture Front, C-Frame
	68002030AA	1	J, T, U		49				Right
	68002031AA	1	J, T, U		49				Left
	68019708AA	1	J, T, U		74				Right
	68019709AA	1	J, T, U		74				Left
4	06033150	2							NUT PLATE, .25-20
5									WEATHERSTRIP, Front Door
	05074642AC	1	J, T, U		49				Right
	05074643AC	1	J, T, U		49				Left
-6	05115760AC	2	J, T, U		49, 74				WEATHERSTRIP, B Pillar Cutline

COMPASS/PATRIOT (MK)

SERIES	LINE	BODY	ENGINE	TRANSMISSION
H = HIGHLINE L = LOWLINE P = PREMIUM	J = JEEP - 4WD T = JEEP - 2WD	49 = HATCHBACK TYPE #2 74 = SPORT UTILITY 4-DR TYPE #4	ED3 = 2.4L 4 Cyl DOHC 16V Dual VVT Engine	DD7 = 5-Speed Manual T355 Transmission DEF = 6-Speed Manual Aisin BG6 Trans DAV = Continuously Variable Transmission DAW = Cont.Var. w/Off-Rd Crawl Ratio Trans

Quarter Panel - [49] Body
Figure SMK-910

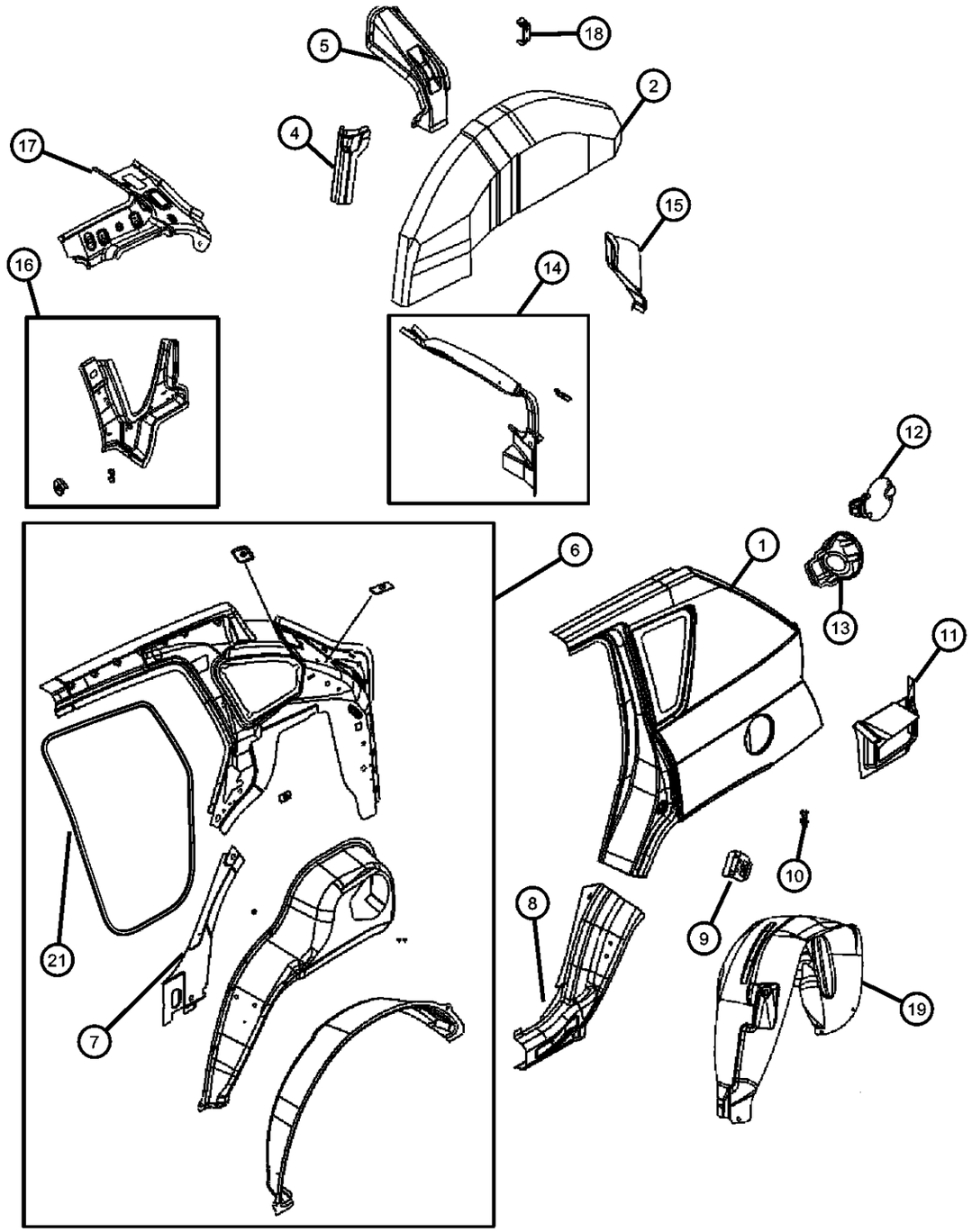

ITEM	PART NUMBER	QTY	LINE	SERIES	BODY	ENGINE	TRANS	TRIM	DESCRIPTION
1									PANEL PACKAGE, Body Side Aperture Rear
	68001972AA	1	J, T, U		49				Right
	68001973AA	1	J, T, U		49				Left
2									PANEL, Wheelhouse Inner
	05115160AA	1							Right
	05115161AA	1							Left
-3	05291794AB	1							STUFFER
4									PLATE, Wheelhouse
	05115210AA	1							Right
	05115211AA	1							Left
5									REINFORCEMENT, Wheelhouse Inner
	05115266AA	1							Right
	05115267AA	1							Left
6									PANEL, Quarter Inner
	68001962AA	1	J, T, U		49				Right
	68001963AA	1	J, T, U		49				Left
7									PANEL, Quarter Inner Lower Front
	05160004AA	1							Right
	05160005AA	1							Left
8									REINFORCEMENT, Body Side Aperture
	05074873AA	1	J, T, U		49				Left
	05074872AA	1	J, T, U		49				Right
9	05074092AA	2							RETAINER, Door Latch Striker
10	05160001AA	2							PLATE, Striker
11									REINFORCEMENT, Quarter Inner
	05074858AA	1	J, T, U		49				Right
	05074859AA	1	J, T, U		49				Left
12	05074082AA	1							DOOR, Fuel Fill
13	05074083AA	1							HOUSING, Fuel Filler
14									TROUGH, Liftgate Opening
	05074900AC	1	J		49				Right

COMPASS/PATRIOT (MK)

SERIES	LINE	BODY	ENGINE	TRANSMISSION
H = HIGHLINE L = LOWLINE P = PREMIUM	J = JEEP - 4WD T = JEEP - 2WD	49 = HATCHBACK TYPE #2 74 = SPORT UTILITY 4-DR TYPE #4	ED3 = 2.4L 4 Cyl DOHC 16V Dual VVT Engine	DD7 = 5-Speed Manual T355 Transmission DEF = 6-Speed Manual Aisin BG6 Trans DAV = Continuously Variable Transmission DAW = Cont.Var. w/Off-Rd Crawl Ratio Trans

Quarter Panel - [49] Body
Figure SMK-910

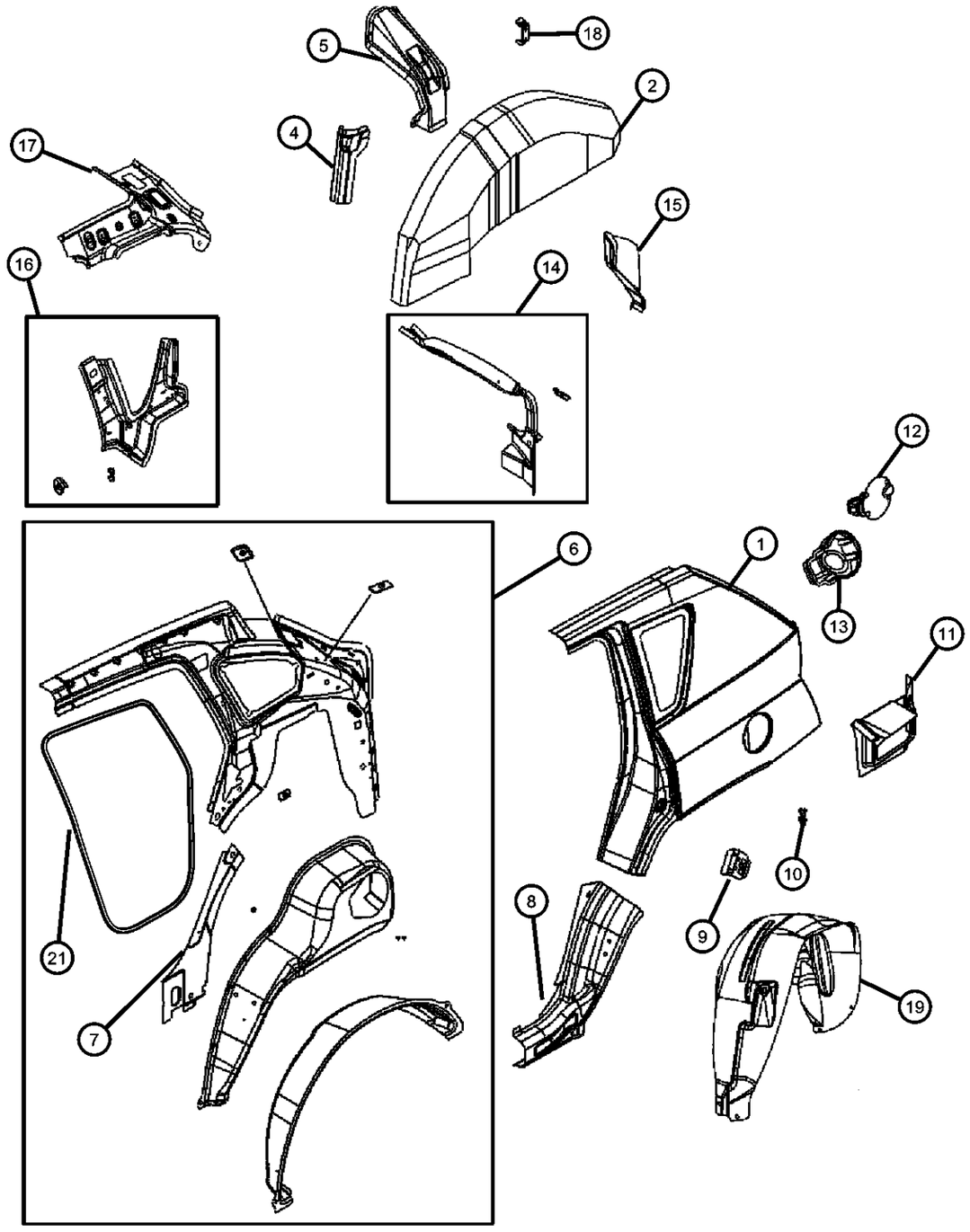

ITEM	PART NUMBER	QTY	LINE	SERIES	BODY	ENGINE	TRANS	TRIM	DESCRIPTION
	05074901AC	1	J		49				Left
15									PANEL, Taillamp Mounting
	05074894AB	1	J, T, U		49				Right
	05074895AB	1	J, T, U		49				Left
16									REINFORCEMENT, Quarter Panel Beltline
	05115788AA	1	J, T, U		49				Right
	05115789AA	1	J, T, U		49				Left
17									REINFORCEMENT, D Pillar Upper
	05074860AA	1	J, T, U		49				Right
	05074861AA	1	J, T, U		49				Left
18									BRACKET, Wheelhouse
	05115859AA	1							
		1	J		49				
19									SHIELD, Wheelhouse
	05303948AA	1	J, T, U		49				Right
	05303949AA	1	J, T, U		49				Left
-20	55394330AB	2							EXHAUSTER, Bodyside Aperture
21									WEATHERSTRIP, Rear Door Opening
	05074646AC	1	J, T, U		49				Right
	05074647AC	1	J, T, U		49				Left

COMPASS/PATRIOT (MK)

SERIES	LINE	BODY	ENGINE	TRANSMISSION
H = HIGHLINE L = LOWLINE P = PREMIUM	J = JEEP - 4WD T = JEEP - 2WD	49 = HATCHBACK TYPE #2 74 = SPORT UTILITY 4-DR TYPE #4	ED3 = 2.4L 4 Cyl DOHC 16V Dual VVT Engine	DD7 = 5-Speed Manual T355 Transmission DEF = 6-Speed Manual Aisin BG6 Trans DAV = Continuously Variable Transmission DAW = Cont.Var. w/Off-Rd Crawl Ratio Trans

Quarter Panel - 74 Body
Figure SMK-915

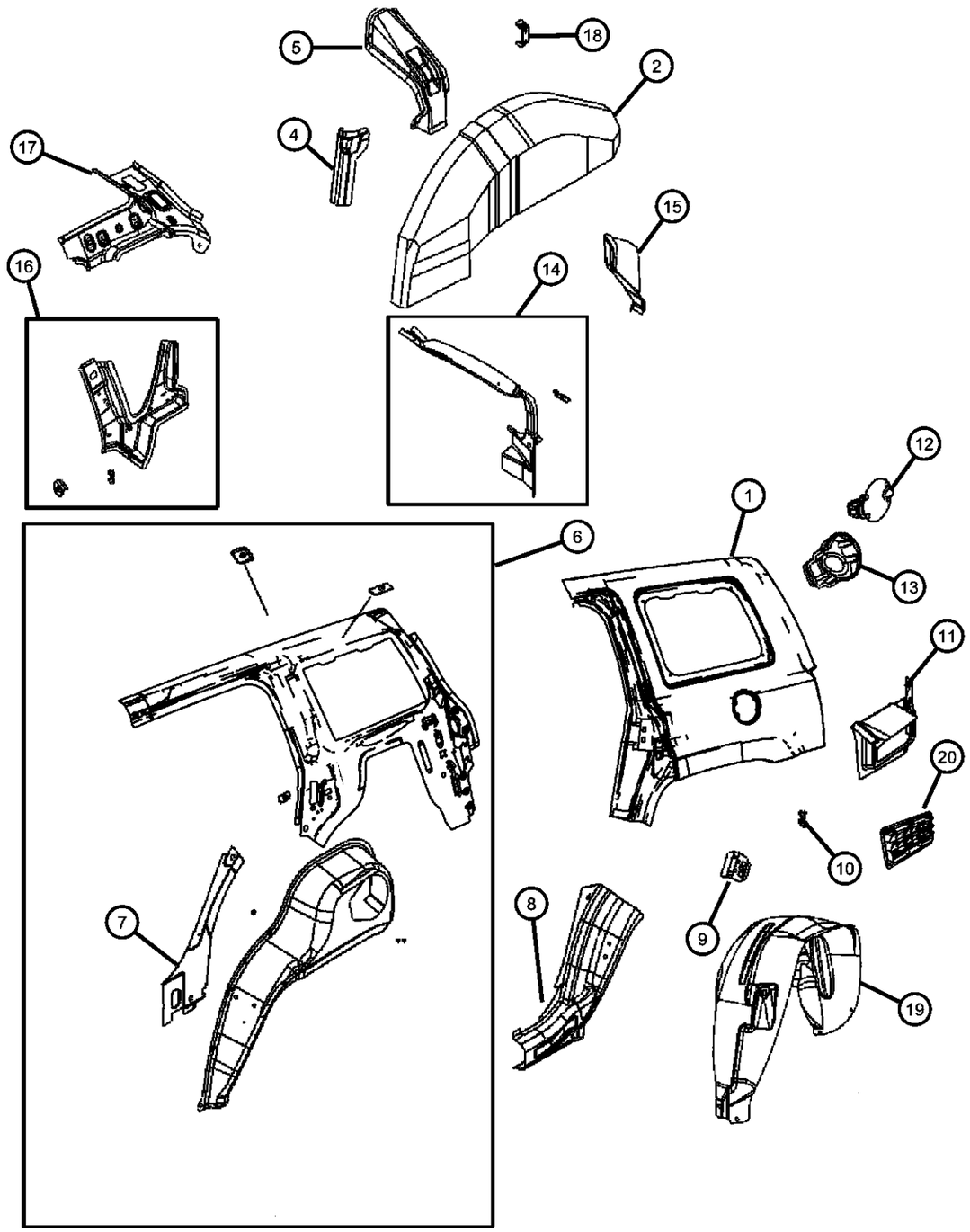

ITEM	PART NUMBER	QTY	LINE	SERIES	BODY	ENGINE	TRANS	TRIM	DESCRIPTION
1									PANEL PACKAGE, Body Side Aperture Rear
	68019178AA	1	J, T, U		74				Right
	68019179AA	1	J, T, U		74				Left
2									PANEL, Wheelhouse Inner
	05115161AA	1							Left
	05115160AA	1							Right
-3	05291794AB	1							STUFFER
4									PLATE, Wheelhouse
	05115210AA	1							Right
	05115211AA	1							Left
5									REINFORCEMENT, Wheelhouse Inner
	05115266AA	1							Right
	05115267AA	1							Left
6									PANEL, Quarter Inner
	68001964AA	1	J, T, U		74				Right
	68001965AA	1	J, T, U		74				Left
7									PANEL, Quarter Inner Lower Front
	05160005AA	1							Left
	05160004AA	1							Right
8									REINFORCEMENT, Body Side Aperture
	05160127AA	1	J, T, U		74				Left
	05160126AA	1	J, T, U		74				Right
9	05074092AA	2							RETAINER, Door Latch Striker
10	05160001AA	2							PLATE, Striker
11									REINFORCEMENT, Quarter Inner
	05160088AB	1	J, T, U		74				Right
	05160089AB	1	J, T, U		74				Left
12	05074082AA	1							DOOR, Fuel Fill
13	05074083AA	1							HOUSING, Fuel Filler
14									TROUGH, Liftgate Opening
	05160138AC	1	J, T, U		74				Right

COMPASS/PATRIOT (MK)

SERIES	LINE	BODY	ENGINE	TRANSMISSION
H = HIGHLINE L = LOWLINE P = PREMIUM	J = JEEP - 4WD T = JEEP - 2WD	49 = HATCHBACK TYPE #2 74 = SPORT UTILITY 4-DR TYPE #4	ED3 = 2.4L 4 Cyl DOHC 16V Dual VVT Engine	DD7 = 5-Speed Manual T355 Transmission DEF = 6-Speed Manual Aisin BG6 Trans DAV = Continuously Variable Transmission DAW = Cont.Var. w/Off-Rd Crawl Ratio Trans

AR = use ase required - = Non illustrrated part

Quarter Panel - 74 Body
Figure SMK-915

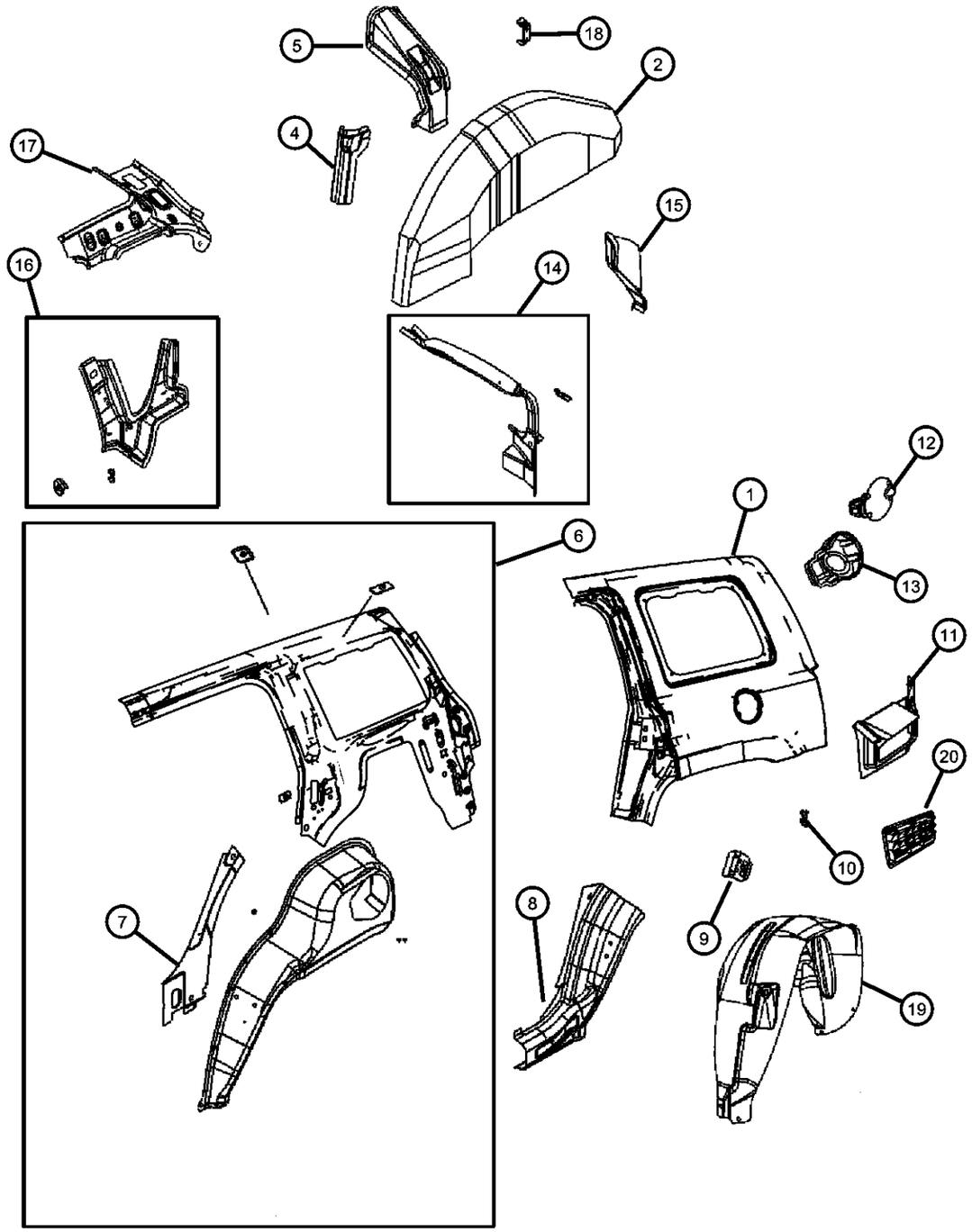

ITEM	PART NUMBER	QTY	LINE	SERIES	BODY	ENGINE	TRANS	TRIM	DESCRIPTION
	05160139AC	1	J, T, U		74				Left
15									PANEL, Taillamp Mounting
	05160090AB	1	J, T, U		74				Right
	05160091AB	1	J, T, U		74				Left
16									REINFORCEMENT, Quarter Panel Beltline
	05160145AB	1	J, T, U		74				Left
	05160144AB	1	J, T, U		74				Right
17									REINFORCEMENT, D Pillar Upper
	05160136AA	1	J, T, U		74				Right
	05160137AA	1	J, T, U		74				Left
18	05115859AA	1							BRACKET, Wheelhouse
19									SHIELD, Wheelhouse
	05116242AB	1	J, T, U		74				Right
	05116243AB	1	J, T, U		74				Left
20	55394330AB	2							EXHAUSTER, Bodyside Aperture

COMPASS/PATRIOT (MK)

SERIES	LINE	BODY	ENGINE	TRANSMISSION
H = HIGHLINE L = LOWLINE P = PREMIUM	J = JEEP - 4WD T = JEEP - 2WD	49 = HATCHBACK TYPE #2 74 = SPORT UTILITY 4-DR TYPE #4	ED3 = 2.4L 4 Cyl DOHC 16V Dual VVT Engine	DD7 = 5-Speed Manual T355 Transmission DEF = 6-Speed Manual Aisin BG6 Trans DAV = Continuously Variable Transmission DAW = Cont.Var. w/Off-Rd Crawl Ratio Trans

AR = use ase required - = Non illustrrated part

Roof
Figure SMK-1110

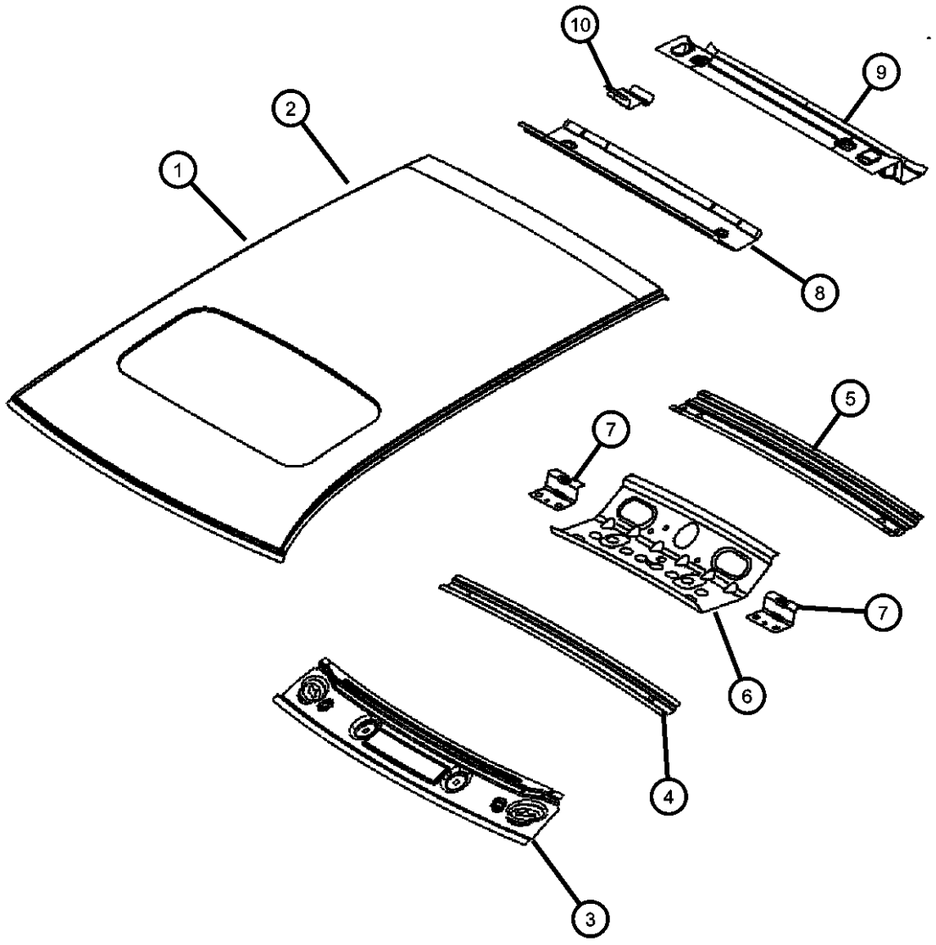

ITEM	PART NUMBER	QTY	LINE	SERIES	BODY	ENGINE	TRANS	TRIM	DESCRIPTION
1									ROOF, Sunroof
	05074889AA	1			49				
	05160129AE	1	J, T, U		74				
2									ROOF, Outer
	05074888AA	1			49				
	05116453AE	1	J, T, U		74				
3									HEADER, Windshield
	05116379AA	1	J, T, U		74				
	05116392AA	1	J, T, U		49				
4	05074329AA	1							BOW, Roof
5	05115780AA	1	J, T, U		49				BOW, Roof
6									HEADER, Roof Lower Rear
	05160148AC	1	J, T, U		74				
	05115218AB	1	J, T, U		49				
7	05074630AA	2	J, T, U		49, 74				REINFORCEMENT, Upper Header Hinge
8									HEADER, Roof Lower Rear
	05160148AC	1	J, T, U		74				
	05115218AB	1	J, T, U		49				
9									HEADER, Roof Upper Rear
	05115219AB	1	J, T, U		49				
	05160149AC	1	J, T, U		74				
10	05074630AA	2	J, T, U		49, 74				REINFORCEMENT, Upper Header Hinge

COMPASS/PATRIOT (MK)

SERIES	LINE	BODY	ENGINE	TRANSMISSION
H = HIGHLINE L = LOWLINE P = PREMIUM	J = JEEP - 4WD T = JEEP - 2WD	49 = HATCHBACK TYPE #2 74 = SPORT UTILITY 4-DR TYPE #4	ED3 = 2.4L 4 Cyl DOHC 16V Dual VVT Engine	DD7 = 5-Speed Manual T355 Transmission DEF = 6-Speed Manual Aisin BG6 Trans DAV = Continuously Variable Transmission DAW = Cont.Var. w/Off-Rd Crawl Ratio Trans

Sunroof
Figure SMK-1210

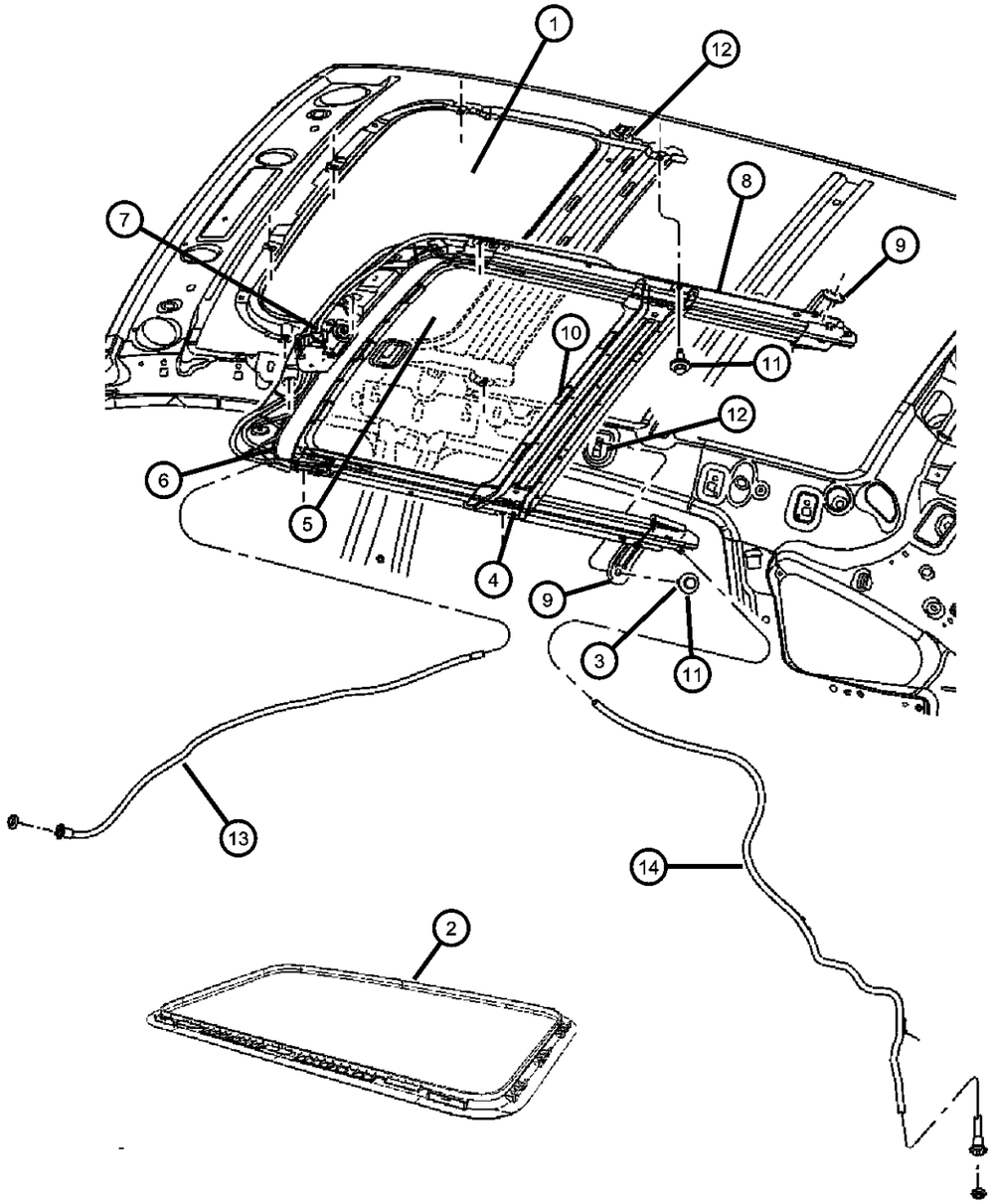

ITEM	PART NUMBER	QTY	LINE	SERIES	BODY	ENGINE	TRANS	TRIM	DESCRIPTION
1	05183171AA	1							GLASS, Sunroof
2	05183172AA	1							SEAL, Sunroof Glass
3	05183173AA	1							SCREW PACKAGE, Sunroof Glass Attach
4	05183176AA	1							CHANNEL, Sunroof Drain
5									SUNSHADE, Sunroof
	1DP18DW1AA	1	J, T, U		49				[DA]
		1	J, T, U		49				[KA]
		1	J, T, U		74				[DA]
		1	J, T, U		74				[KA]
6	68019335AA	1	J, T, U		49				DEFLECTOR, Sunroof Wind
7	05183174AA	1							MOTOR, Sunroof
8	05183170AA	1							FRAME, Sunroof
9	05183177AA	1							BRACKET, Sunroof Frame
10	05183208AA	1							VELCRO STRIP
11	06104366AA	6							SCREW AND WASHER, Hex Head, M6x1x20
12									NUT, U, M6x1
	06506035AA	6							Sunroof to Ring Reinforcement
		2							Sunroof to Roof Side Rail
13									HOSE, Sunroof Drain, Clips serviced with Hose
	05115794AB	1	J, T, U		49				Front Left
	05115794AD	1	J, T, U		74				Front Left
	05160008AB	1	J, T, U		49				Front Right
	05160008AC	1	J, T, U		74				Front Right
	05160134AA	2	J, T, U		74				Rear
14	05160043AA	2	J		49				HOSE, Sunroof Drain, RearRear

COMPASS/PATRIOT (MK)

SERIES	LINE	BODY	ENGINE	TRANSMISSION
H = HIGHLINE L = LOWLINE P = PREMIUM	J = JEEP - 4WD T = JEEP - 2WD	49 = HATCHBACK TYPE #2 74 = SPORT UTILITY 4-DR TYPE #4	ED3 = 2.4L 4 Cyl DOHC 16V Dual VVT Engine	DD7 = 5-Speed Manual T355 Transmission DEF = 6-Speed Manual Aisin BG6 Trans DAV = Continuously Variable Transmission DAW = Cont.Var. w/Off-Rd Crawl Ratio Trans

AR = use ase required - = Non illustrrated part

Liftgate - [49] Body
Figure SMK-1310

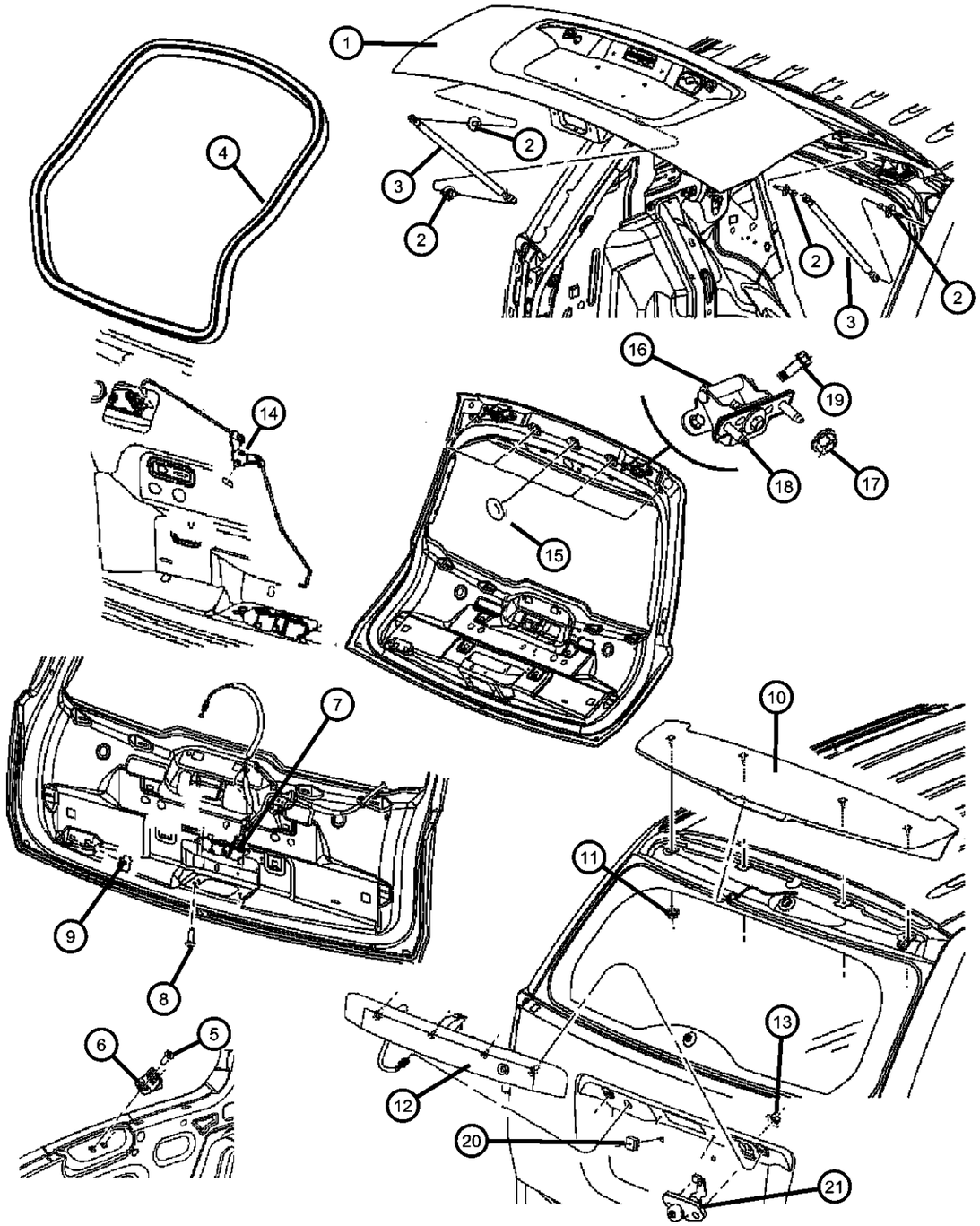

ITEM	PART NUMBER	QTY	LINE	SERIES	BODY	ENGINE	TRANS	TRIM	DESCRIPTION
1	05074972AE	1	J, T, U		49				LIFTGATE
2	06507844AA	4							BALL STUD
3									PROP, Liftgate
	05109514AB	2	J		49				Without [RFS]
	05115226AB	2	J		49				With [RFS]
4	05074641AC	1	J, T, U		49				WEATHERSTRIP, Liftgate Opening
5	06503533	2							SCREW, Flange Head, M8x1.25x26
6	04717707AA	1							STRIKER, Liftgate
7									LATCH, Liftgate
	04589111AC	1							With [JE8]
	04589176AA	1							With [JPH]
8	06504212	3							SCREW, Large Round Washer Head Lock, M6x1.00x20.00
9	06506955AA	2							NUT, Snap In, To Liftgate Pull Cup
10	0ZM46RXFAA	1			49				SPOILER, Liftgate
11	06104725AA	4							NUT AND WASHER, M6x1, Spoiler to Liftgate
12									HANDLE, Liftgate
	0ZH33AJCAA	1	J, T, U		49, 74				[JC] , With [JPH] [MPM]
	0ZH33CB6AA	1	J, T, U		49, 74				[B6] , With [JPH] [MPM]
	0ZH33DB-MAA	1	J, T, U		49, 74				[BM] , With [JPH] [MPM]
	0ZH33DX8AA	1	J, T, U		49, 74				[X8] , With [JPH] [MPM]
	0ZH33EGJAA	1	J		49				[GJ] , With [JPH] [MPM]
	0ZH33SW1AA	1	J, T, U		49, 74				[W1] , With [JPH] [MPM]
	0ZH33WS2AA	1	J, T, U		49, 74				[S2] , With [JPH] [MPM]
	0ZH33ARHAA	1	J, T, U		49, 74				[RH] , With [JPH] [MPM]
	0ZH34RXFAA	1	J, T, U		49, 74				With [JE8] [MPM]
13	06104725AA	2							NUT AND WASHER, M6x1
14	05115783AB	1	J		49				LINK, Key Cylinder to Actuator
15	05067670AA	5							PLUG
16									HINGE, Liftgate
	05115748AC	1							Right
	05115749AC	1							Left

COMPASS/PATRIOT (MK)

SERIES	LINE	BODY	ENGINE	TRANSMISSION
H = HIGHLINE L = LOWLINE P = PREMIUM	J = JEEP - 4WD T = JEEP - 2WD	49 = HATCHBACK TYPE #2 74 = SPORT UTILITY 4-DR TYPE #4	ED3 = 2.4L 4 Cyl DOHC 16V Dual VVT Engine	DD7 = 5-Speed Manual T355 Transmission DEF = 6-Speed Manual Aisin BG6 Trans DAV = Continuously Variable Transmission DAW = Cont.Var. w/Off-Rd Crawl Ratio Trans

AR = use ase required - = Non illustrrated part

Liftgate - [49] Body
Figure SMK-1310

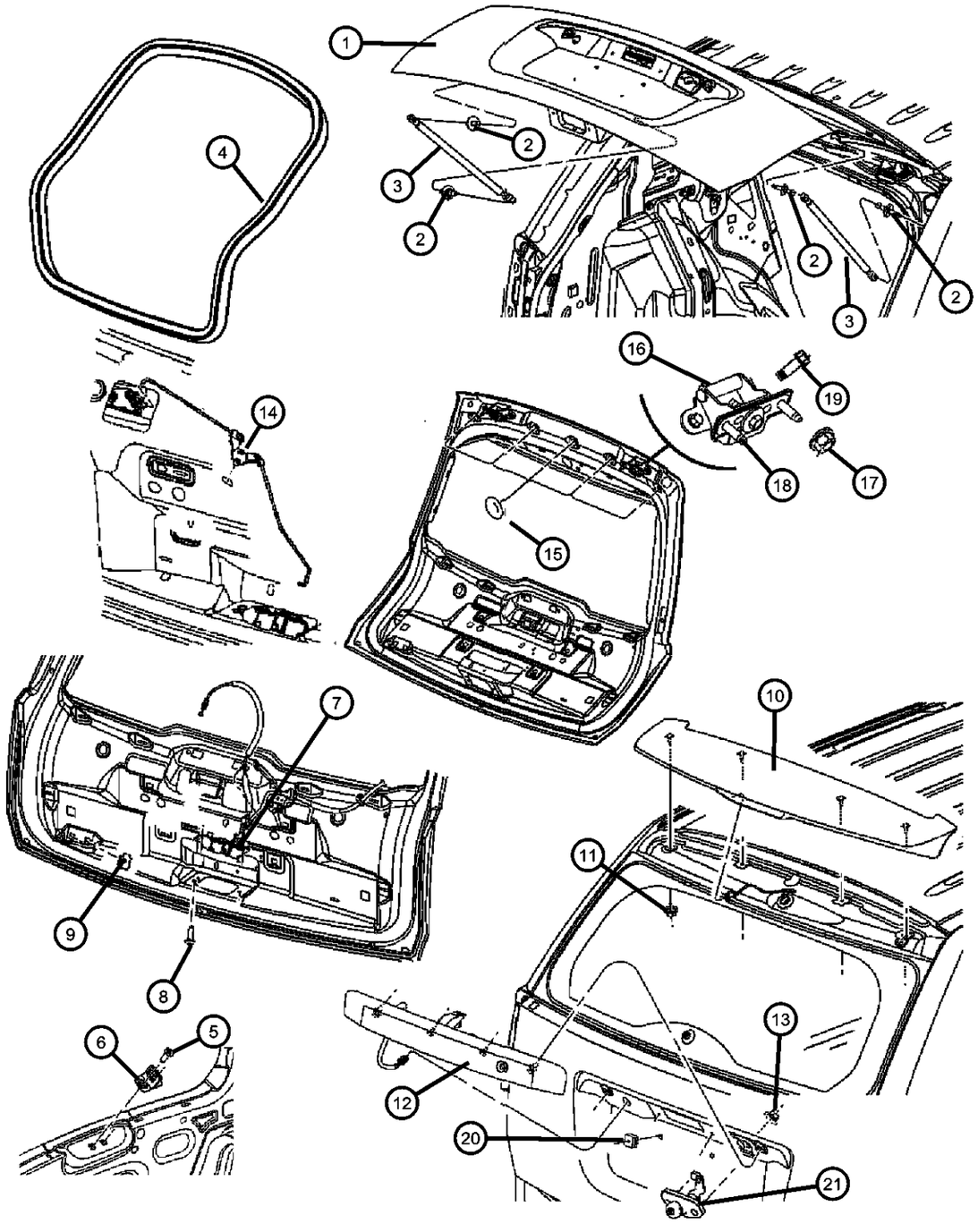

ITEM	PART NUMBER	QTY	LINE	SERIES	BODY	ENGINE	TRANS	TRIM	DESCRIPTION
17	06101831	4							NUT, Hex Flange, M8x1.25, Hinge to Body
18	06505269AA	2							SCREW AND WASHER, Head Head Lock, M8-1.25x30.00, Hinge Plate to Body
19	06104386AA	4							SCREW, M8x1.25x25, Hinge to Liftplate
20	04860786AB	2							NUT, Plastic Snap-in
21	68000602AA	1	J, T, U		49, 74				CYLINDER, Liftgate Lock, With [GXX] [JE8] , without [GRX] or [XJH]
-22	04717942AD	1	J, T, U		49				LEVER, Sliding Door, Door Lock

COMPASS/PATRIOT (MK)

SERIES	LINE	BODY	ENGINE	TRANSMISSION
H = HIGHLINE L = LOWLINE P = PREMIUM	J = JEEP - 4WD T = JEEP - 2WD	49 = HATCHBACK TYPE #2 74 = SPORT UTILITY 4-DR TYPE #4	ED3 = 2.4L 4 Cyl DOHC 16V Dual VVT Engine	DD7 = 5-Speed Manual T355 Transmission DEF = 6-Speed Manual Aisin BG6 Trans DAV = Continuously Variable Transmission DAW = Cont.Var. w/Off-Rd Crawl Ratio Trans

Liftgate - [74] Body
Figure SMK-1320

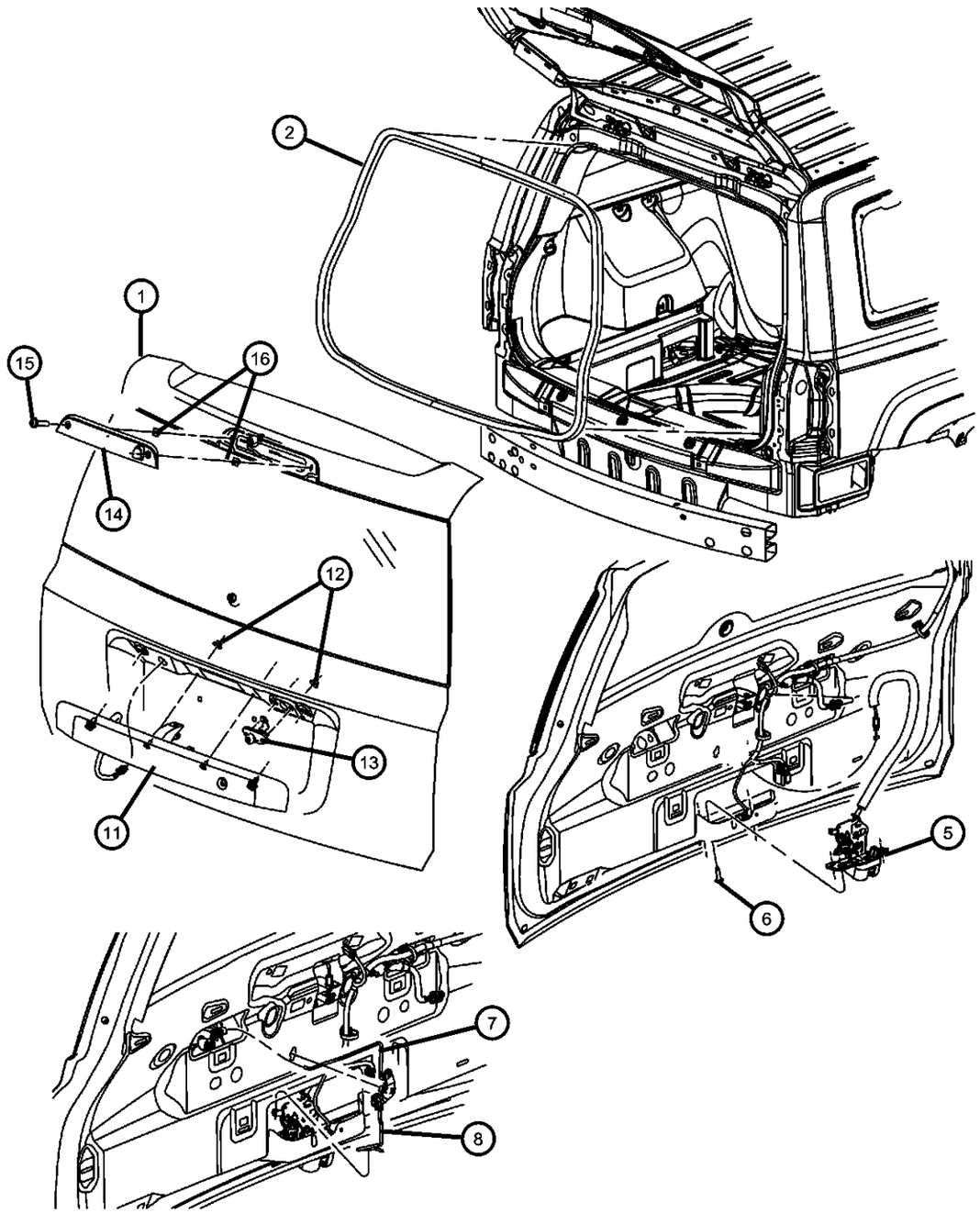

ITEM	PART NUMBER	QTY	LINE	SERIES	BODY	ENGINE	TRANS	TRIM	DESCRIPTION
1	05054349AB	1	J, T, U		74				LIFTGATE
2	05067749AA	1	J, T, U		74				WEATHERSTRIP, Liftgate Opening
-3									PROP, Liftgate
	05054353AB	2	J, T, U		74				Without [RFS]
	05116369AB	2	J, T, U		74				With [RFS]
-4	06507844AA	4							BALL STUD
5	04589131AB	1	J, T, U		74				LATCH, Liftgate
6	06504212	3							SCREW, Large Round Washer Head Lock, M6x1.00x20.00
7	05116351AC	1	J, T, U		74				LINK, Key Cylinder To Latch
8	05116500AA	1	J, T, U		74				LINK, Key Cylinder to Actuator
-9	04589234AA	1	J, T, U		74				STRIKER, Liftgate
-10	06503533	2	J, T, U		49, 74				SCREW, Flange Head, M8x1.25x26
11									HANDLE, Liftgate
	0ZH33AJCAD	1	J, T, U		49, 74				[JC]
	0ZH33ARHAD	1	J, T, U		49, 74				[RH]
	0ZH33CB6AD	1	J, T, U		49, 74				[B6]
	0ZH33DB-MAD	1	J, T, U		74, 49				[BM]
	0ZH33DX8AD	1	J, T, U		49, 74				[X8]
	0ZH33EGJAD	1	J, T, U		49, 74				[GJ]
	0ZH33SW1AD	1	J, T, U		49, 74				[W1]
	0ZH33WS2AD	1	J, T, U		49, 74				[S2]
	0ZH34RXFAD	1	J, T, U		49, 74				With [JE8]
12	06104725AA	2							NUT AND WASHER, M6x1
13	68000602AA	1	J, T, U		49, 74				CYLINDER, Liftgate Lock
14	05116236AB	1	J, T, U		74				LAMP, Liftgate Chmsl
15	06104635AB	2	J, T, U		74				SCREW
16	06035211	2	J, T, U		74				NUT, Snap In

COMPASS/PATRIOT (MK)

SERIES	LINE	BODY	ENGINE	TRANSMISSION
H = HIGHLINE L = LOWLINE P = PREMIUM	J = JEEP - 4WD T = JEEP - 2WD	49 = HATCHBACK TYPE #2 74 = SPORT UTILITY 4-DR TYPE #4	ED3 = 2.4L 4 Cyl DOHC 16V Dual VVT Engine	DD7 = 5-Speed Manual T355 Transmission DEF = 6-Speed Manual Aisin BG6 Trans DAV = Continuously Variable Transmission DAW = Cont.Var. w/Off-Rd Crawl Ratio Trans

Luggage Rack - [49] Body
Figure SMK-1610

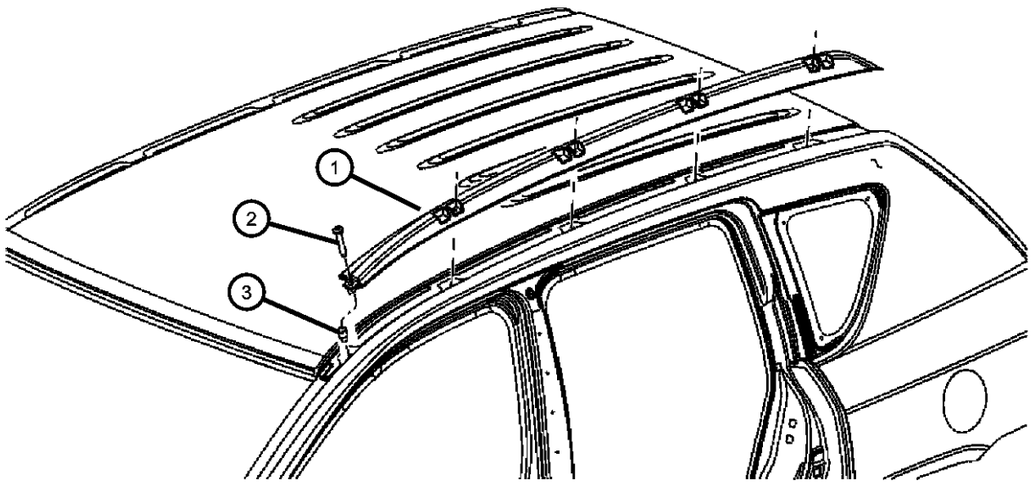

ITEM	PART NUMBER	QTY	LINE	SERIES	BODY	ENGINE	TRANS	TRIM	DESCRIPTION
1									SIDE RAIL, Roof Rack
	05303806AA	1	J, T, U		49				Right
	05303807AA	1	J, T, U		49				Left
2	06508452AA	5	J, T, U		49				SCREW, Pan Head
3	06506739AA	4			49				NUT, Rivet

COMPASS/PATRIOT (MK)

SERIES	LINE	BODY	ENGINE	TRANSMISSION
H = HIGHLINE L = LOWLINE P = PREMIUM	J = JEEP - 4WD T = JEEP - 2WD	49 = HATCHBACK TYPE #2 74 = SPORT UTILITY 4-DR TYPE #4	ED3 = 2.4L 4 Cyl DOHC 16V Dual VVT Engine	DD7 = 5-Speed Manual T355 Transmission DEF = 6-Speed Manual Aisin BG6 Trans DAV = Continuously Variable Transmission DAW = Cont.Var. w/Off-Rd Crawl Ratio Trans

AR = use ase required - = Non illustrrated part

Luggage Rack - [74] Body
Figure SMK-1620

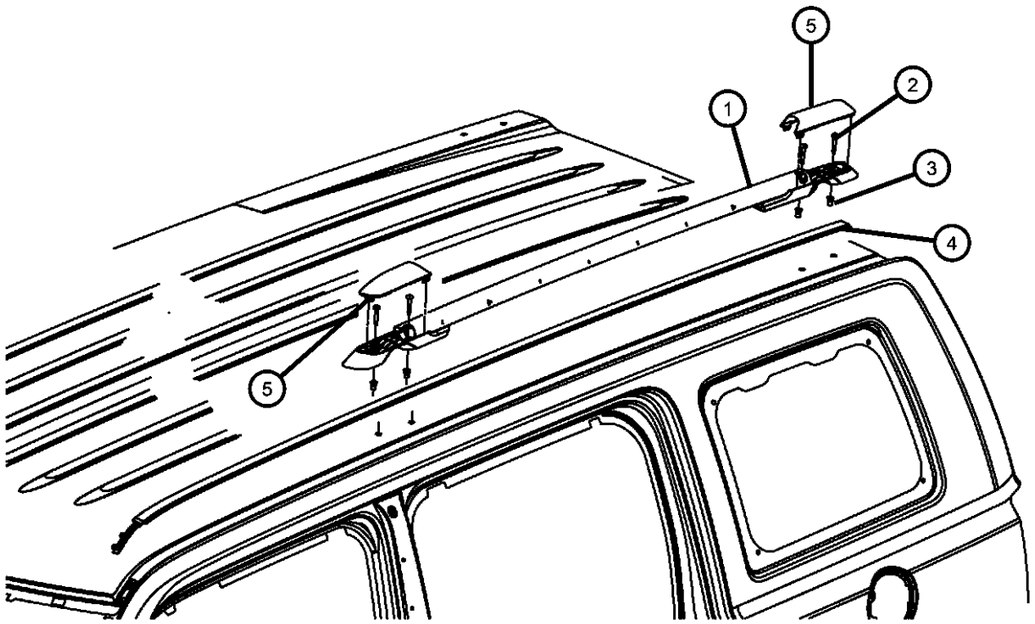

ITEM	PART NUMBER	QTY	LINE	SERIES	BODY	ENGINE	TRANS	TRIM	DESCRIPTION
1									SIDE RAIL, Roof Rack
	05116252AA	1	J, T, U		74				With [MWE], Right
	05116253AA	1	J, T, U		74				With [MWE], Left
	05116370AA	1	J, T, U		74				With [MW1], Right
	05116371AA	1	J, T, U		74				With [MW1], Left
2	06508452AA	4	J, T, U		74				SCREW, Pan Head
3	06506739AA	4			74				NUT, Rivet
4									MOLDING, Roof
	05116250AB	1	J, T, U		74				Right
	05116251AB	1	J, T, U		74				Left
5									COVER, Luggage Rack
	55394342AB	1	J, T, U		74				Front, Right
	55394343AB	1	J, T, U		74				Front, Left
	55394344AB	1	J, T, U		74				Rear, Right
	55394345AB	1	J, T, U		74				Rear, Left
-6	05116469AA	2	U, J, T		49, 74				RAIL, LUGG RACK CROSS

COMPASS/PATRIOT (MK)

SERIES	LINE	BODY	ENGINE	TRANSMISSION
H = HIGHLINE L = LOWLINE P = PREMIUM	J = JEEP - 4WD T = JEEP - 2WD	49 = HATCHBACK TYPE #2 74 = SPORT UTILITY 4-DR TYPE #4	ED3 = 2.4L 4 Cyl DOHC 16V Dual VVT Engine	DD7 = 5-Speed Manual T355 Transmission DEF = 6-Speed Manual Aisin BG6 Trans DAV = Continuously Variable Transmission DAW = Cont.Var. w/Off-Rd Crawl Ratio Trans

AR = use ase required - = Non illustrrated part

Group - LBLS

Labels All Vehicle Locations

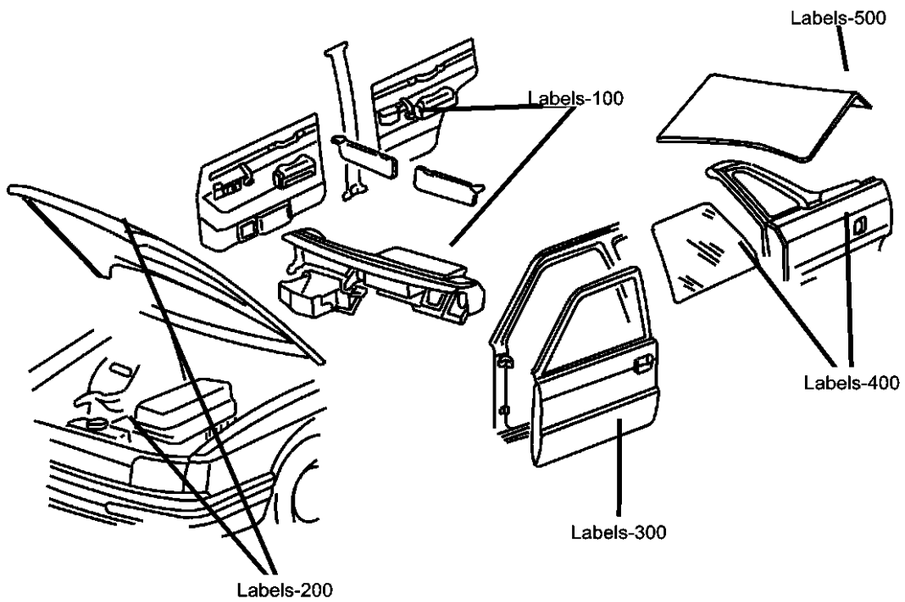

LBLS-100 Interior 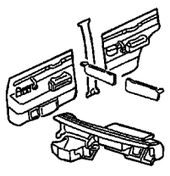	**LBLS-200** Under Hood 	**LBLS-300** Doors 	**LBLS-400** Exterior 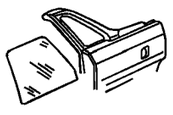
LBLS-500 Trunk 			

Group - LBLS Labels All Vehicle Locations

Illustration Title — Group-Fig. No.

Interior
Instrument Panel and Visors ..... Fig. LBLS - 110

Under Hood
Engine Compartment ..... Fig. LBLS - 210

Doors
Doors and Pillars ..... Fig. LBLS - 310

Exterior
Fuel Door ..... Fig. LBLS - 410

Trunk
Rear Cargo and Storage ..... Fig. LBLS - 510

Instrument Panel and Visors
Figure LBLS-110

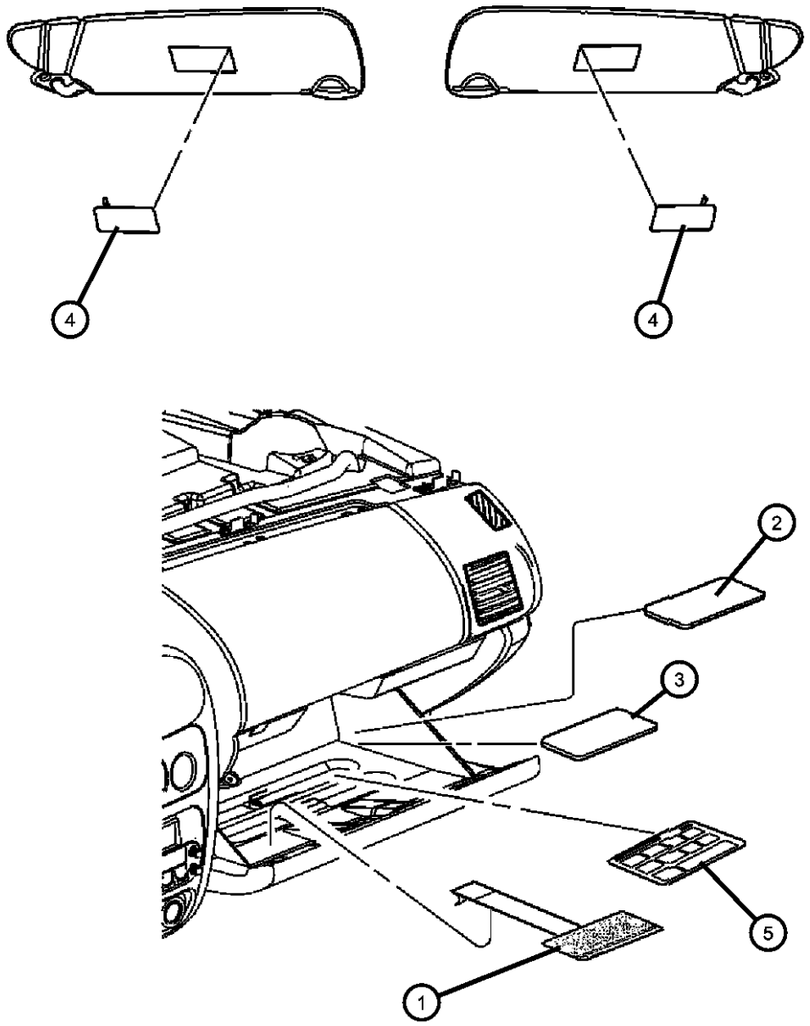

ITEM	PART NUMBER	QTY	LINE	SERIES	BODY	ENGINE	TRANS	TRIM	DESCRIPTION
1									LABEL, Air Bag Warning
	05023541AA	2							AIR BAG WARNING SUN VISOR (ENGLISH & SPANISH
	05023543AA	2							AIR BAG WARNING SUN VISOR (ENGLISH & ITALIAN
	04649282AA	2							
	05023743AA	2							AIR BAG WARNING SUN VISOR (ENGLISH & GERMAN)
	05108000AA	2							AIR BAG WARNING (ENGLISH & FRENCH)
2	05108000AA	2							MANUAL, Owners, (NOT SERVICED),
3	05108000AA	2							DECAL, Seat Belt Safety, Owners, (NOT SERVICED)
4									LABEL, Air Bag Warning
	04664313AA	2							Export
	05023541AA	2							Sunvisor
	05108000AA	2							French English Stick on
	05170020AA	2							Arabic English
	05023543AA	2							English Italian Billingual
5	05023543AA	2							LABEL, Wheel Cover Instructions, (NOT SERVICED),
-6	06032217	2							RIVET, .197 Grip-.187-.375

COMPASS/PATRIOT (MK)

SERIES	LINE	BODY	ENGINE	TRANSMISSION
H = HIGHLINE L = LOWLINE P = PREMIUM	J = JEEP - 4WD T = JEEP - 2WD	49 = HATCHBACK TYPE #2 74 = SPORT UTILITY 4-DR TYPE #4	ED3 = 2.4L 4 Cyl DOHC 16V Dual VVT Engine	DD7 = 5-Speed Manual T355 Transmission DEF = 6-Speed Manual Aisin BG6 Trans DAV = Continuously Variable Transmission DAW = Cont.Var. w/Off-Rd Crawl Ratio Trans

AR = use ase required - = Non illustrrated part

Engine Compartment
Figure LBLS-210

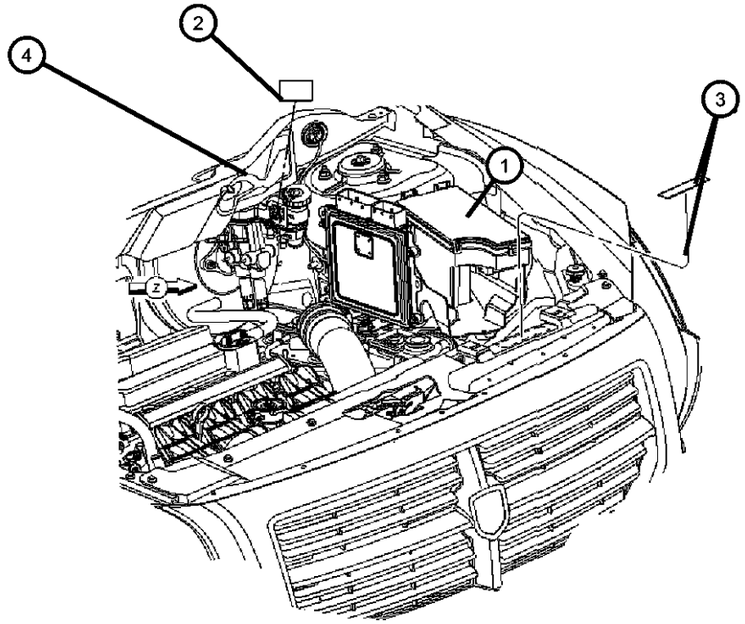

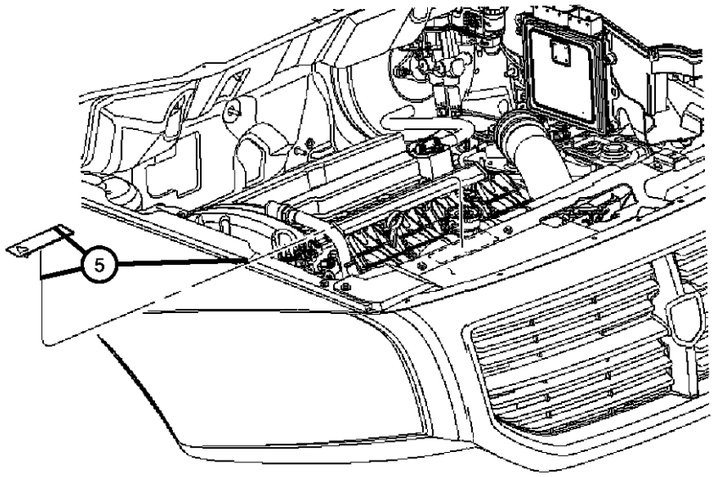

ITEM	PART NUMBER	QTY	LINE	SERIES	BODY	ENGINE	TRANS	TRIM	DESCRIPTION
NOTES: Sales Codes [ECB] = 2.0L Four Cylinder SOHC 16V SMPI [ECH] = 2.0L Four Cylinder SOHC 16V Hi PerformanceI [EDV] = 2.4L Four Cylinder DOHC 16V H. O. Turbo [NA1] = Export [NAS] = U.S. 50 State									
1	04606793AA	1							LABEL, Battery, Battery European Warning
2	05085606AA	1				ED3			LABEL, Emission, ED3
3									LABEL, A/C Spec.
	05058154AB	1							
	05058519AA	1							A/C SPEC.
4									LABEL, Warning
	05056223AA	1			49				FIRE EXTINGUISHER WARNING
	52128784AA	1							BRAKE FLUID WARNING LABEL ARABIC.
5	04809615AA	1							LABEL, Fan Caution

COMPASS/PATRIOT (MK)

SERIES	LINE	BODY	ENGINE	TRANSMISSION
H = HIGHLINE L = LOWLINE P = PREMIUM	J = JEEP - 4WD T = JEEP - 2WD	49 = HATCHBACK TYPE #2 74 = SPORT UTILITY 4-DR TYPE #4	ED3 = 2.4L 4 Cyl DOHC 16V Dual VVT Engine	DD7 = 5-Speed Manual T355 Transmission DEF = 6-Speed Manual Aisin BG6 Trans DAV = Continuously Variable Transmission DAW = Cont.Var. w/Off-Rd Crawl Ratio Trans

Doors and Pillars
Figure LBLS-310

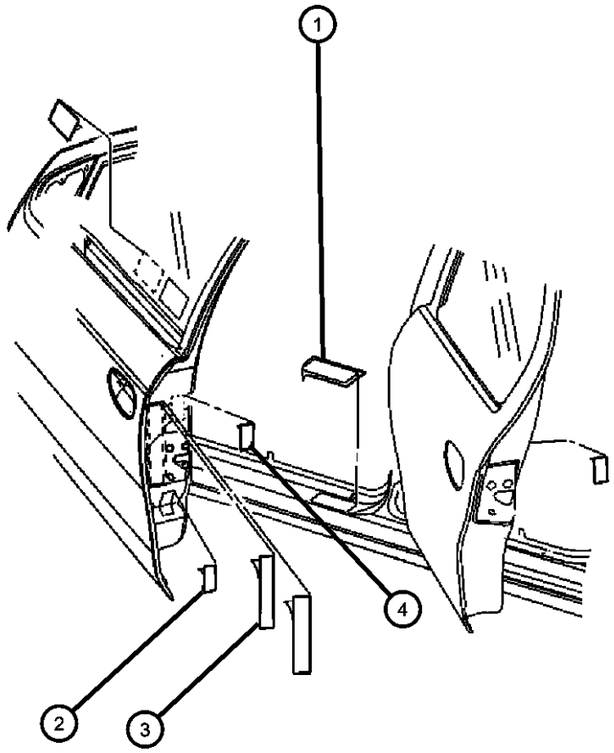

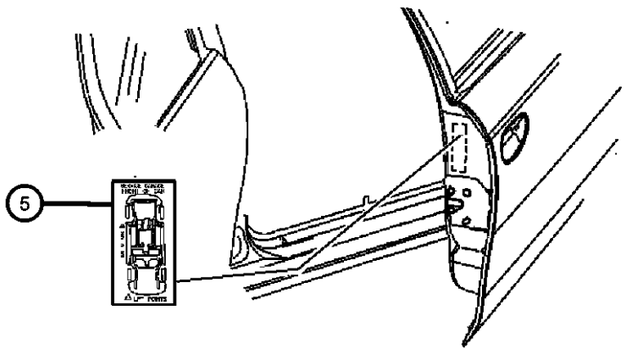

ITEM	PART NUMBER	QTY	LINE	SERIES	BODY	ENGINE	TRANS	TRIM	DESCRIPTION
1									LABEL, Air Bag Warning
	05023541AA	2							AIR BAG WARNING SUN VISOR (ENGLISH & SPANISH
	05023543AA	2							AIR BAG WARNING SUN VISOR (ENGLISH & ITALIAN
	05023743AA	2							AIR BAG WARNING SUN VISOR (ENGLISH & GERMANY
	05108000AA	2							AIR BAG WARNING ENGLISH AND FRENCH SUNVISOR
	05170020AA	2							AIR BAG WARNING ARABIC/ENGLISH
2	05140474AA	1							LABEL
3	05140474AA	1							LABEL, Certification, (NOT SERVICED)
4	05140474AA	1							LABEL, Manufacture for Export, (NOT SERVICED)
5	05140474AA	1							LABEL, Lift Point, (NOT SERVICED)
-6	05056245AA	1							LABEL, Tire Pressure
-7	06032217	2							RIVET, .197 Grip-.187-.375
-8	06032217	2							LABEL, Air Bag, (NOT SERVICED)

COMPASS/PATRIOT (MK)

SERIES	LINE	BODY	ENGINE	TRANSMISSION
H = HIGHLINE L = LOWLINE P = PREMIUM	J = JEEP - 4WD T = JEEP - 2WD	49 = HATCHBACK TYPE #2 74 = SPORT UTILITY 4-DR TYPE #4	ED3 = 2.4L 4 Cyl DOHC 16V Dual VVT Engine	DD7 = 5-Speed Manual T355 Transmission DEF = 6-Speed Manual Aisin BG6 Trans DAV = Continuously Variable Transmission DAW = Cont.Var. w/Off-Rd Crawl Ratio Trans

Fuel Door
Figure LBLS-410

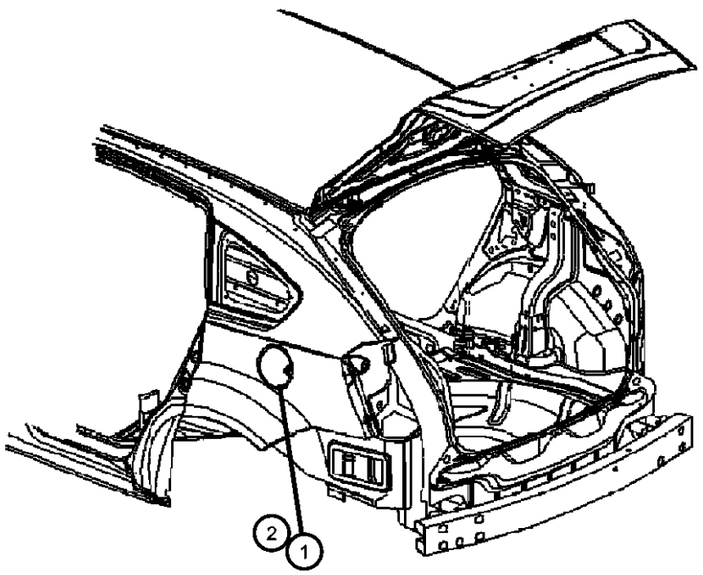

ITEM	PART NUMBER	QTY	LINE	SERIES	BODY	ENGINE	TRANS	TRIM	DESCRIPTION
1	06032217	2							LABEL, Unleaded Fuel Only, (NOT SERVICED)
2	06032217	2							LABEL, Fuel, (NOT SERVICED)
-3	05015636AB	1							CAP KIT, Fuel Tank Locking

COMPASS/PATRIOT (MK)

SERIES	LINE	BODY	ENGINE	TRANSMISSION
H = HIGHLINE L = LOWLINE P = PREMIUM	J = JEEP - 4WD T = JEEP - 2WD	49 = HATCHBACK TYPE #2 74 = SPORT UTILITY 4-DR TYPE #4	ED3 = 2.4L 4 Cyl DOHC 16V Dual VVT Engine	DD7 = 5-Speed Manual T355 Transmission DEF = 6-Speed Manual Aisin BG6 Trans DAV = Continuously Variable Transmission DAW = Cont.Var. w/Off-Rd Crawl Ratio Trans

Rear Cargo and Storage
Figure LBLS-510

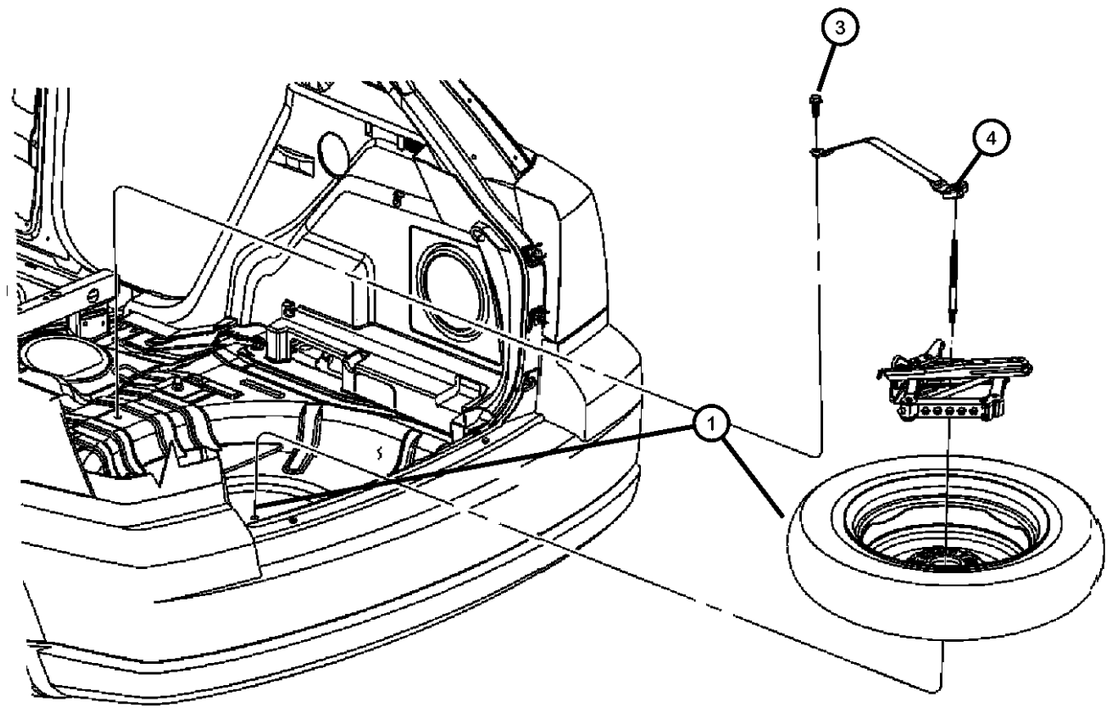

ITEM	PART NUMBER	QTY	LINE	SERIES	BODY	ENGINE	TRANS	TRIM	DESCRIPTION
1									LABEL, Tire Storage
	04472491AC	1			49				
	05273515AB	1							
-2	05056245AA	1							LABEL, Tire Pressure, CERTIFICATION VEHICLE & TIRE BLANK
3	06105077AA	2							SCREW
4	05105876AA	1							HOLD DOWN, Spare Tire, Handle/Floor, M12 X 1.75 FULL SIZE
-5	05105876AA	1							JACK ASSY, JACK ASSY, (NOT SERVICED)

COMPASS/PATRIOT (MK)

SERIES	LINE	BODY	ENGINE	TRANSMISSION
H = HIGHLINE L = LOWLINE P = PREMIUM	J = JEEP - 4WD T = JEEP - 2WD	49 = HATCHBACK TYPE #2 74 = SPORT UTILITY 4-DR TYPE #4	ED3 = 2.4L 4 Cyl DOHC 16V Dual VVT Engine	DD7 = 5-Speed Manual T355 Transmission DEF = 6-Speed Manual Aisin BG6 Trans DAV = Continuously Variable Transmission DAW = Cont.Var. w/Off-Rd Crawl Ratio Trans